# NZR_WIGYUSB_001

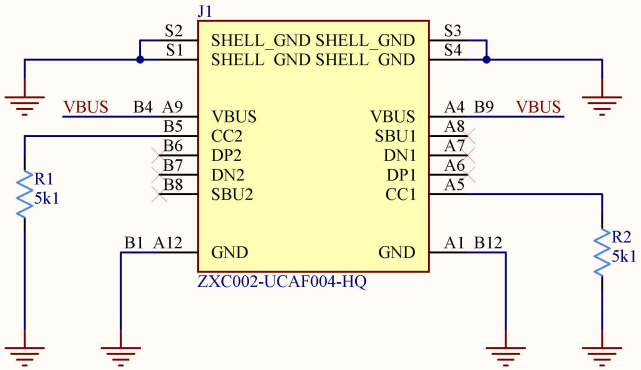


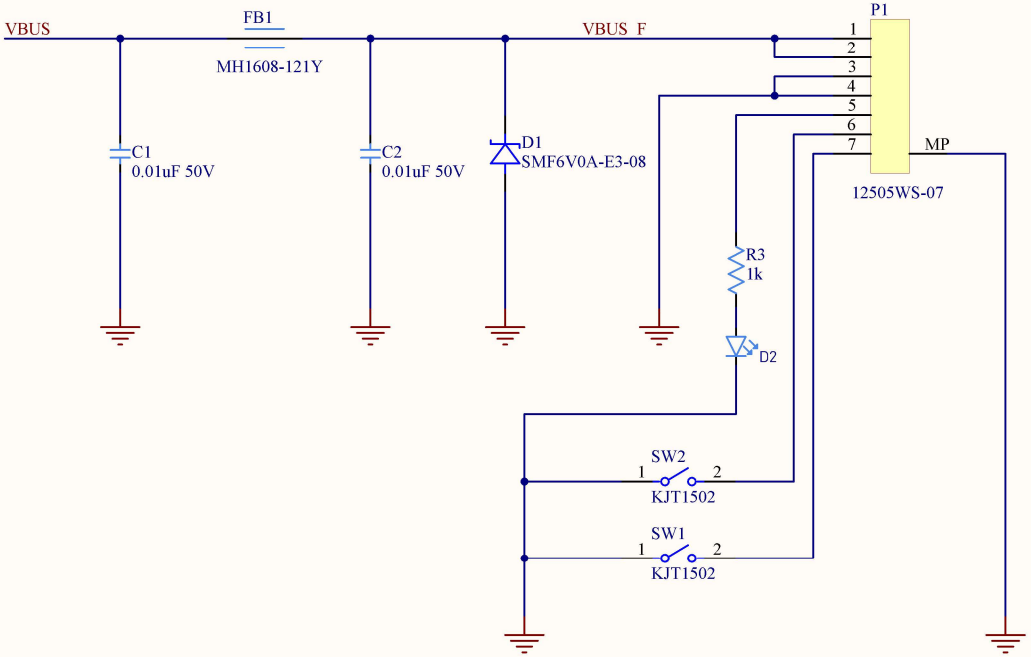


| | | | |
|---|---|---|---|
| THEP | Title *NZR_WIGYUSB_001* | Security | None |
| | | Author | Hyeonseok Shin |
| | Number: 1 | Revision: 1.0 | Doc Size | A4 |
| | Date: 2024-05-21 | Sheet 1 of 1 | |
| | File: C:\Users\thepr\Documents\git\others\NZR_WIGYUSB_001\design\Main.SchDoc | | |