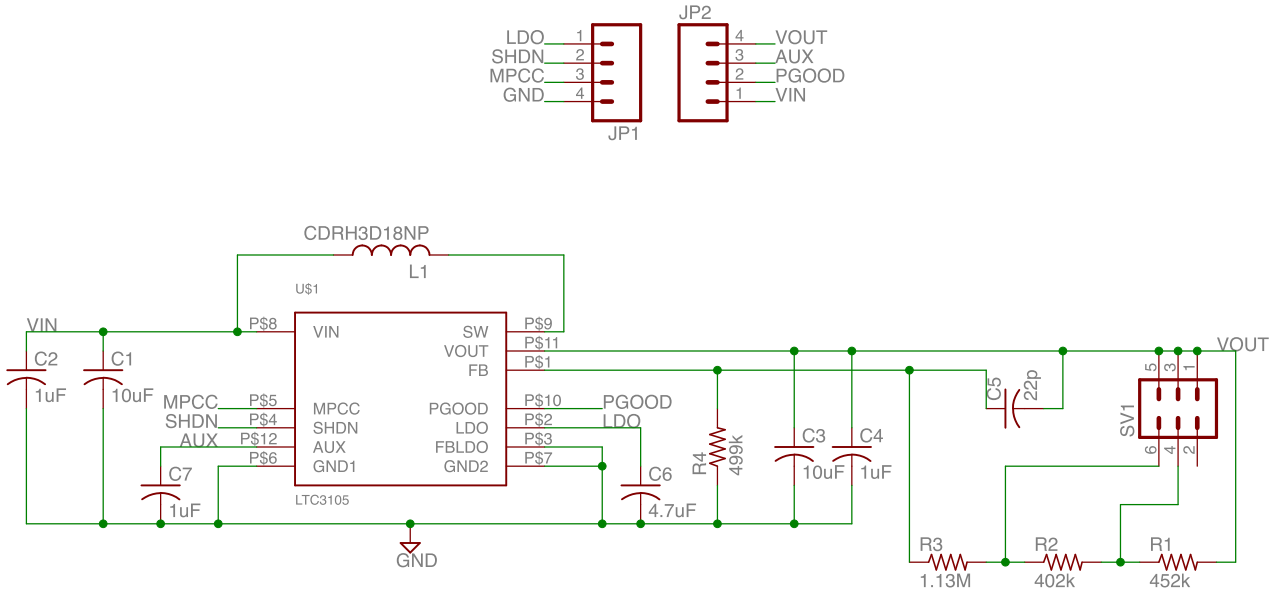

ltc3105	
9/30/15 7:13 PM	
Sheet: 1/1	