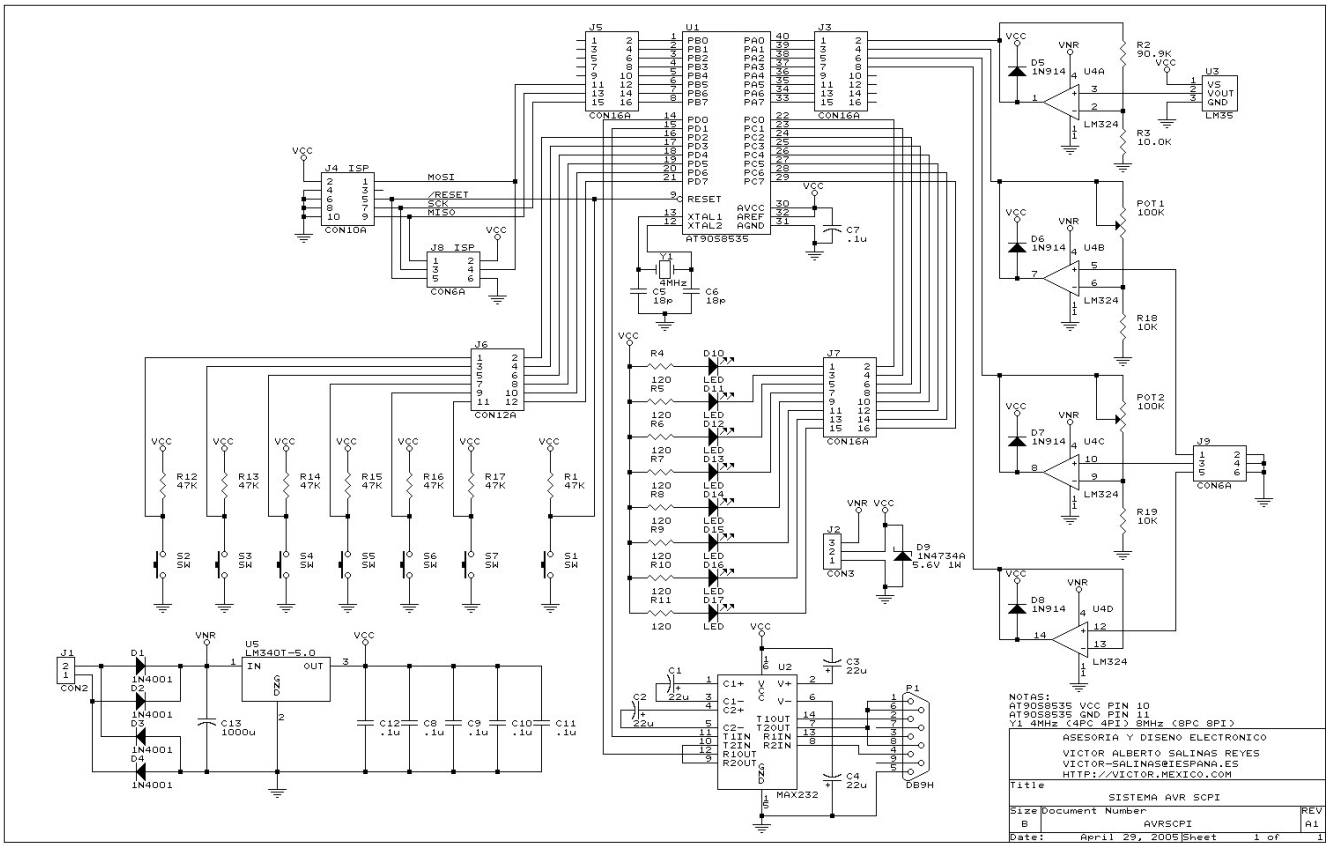
NOTAS:
AT90S8535 VCC PIN 10
AT90S8535 GND PIN 11
Y1 4MHz (4PC 4PI) 8MHz (8PC 8PI)
ASESORIA Y DISENO ELECTRONICO
VICTOR ALBERTO SALINAS REYES
VICTOR-SALINAS@IESPANA.ES
HTTP://VICTOR.MEXICO.COM
Title
SISTEMA AVR SCPI
Size B
Document Number
AVRSCPI
REV A1
Date: April 29, 2005
Sheet 1 of 1