EEC 417/517
Embedded Systems
Cleveland State University

Lab 1

Introduction to the Microcontroller Development System

Dan Simon

Rick Rarick

Spring 2018

Lab 1 Outline

1. Breadboard Setup
2. Input/Output (I/O) Ports, Tristate Buffers
3. Power Supply Circuit
4. Hardware Layout for Lab 1
5. MPLAB Demo

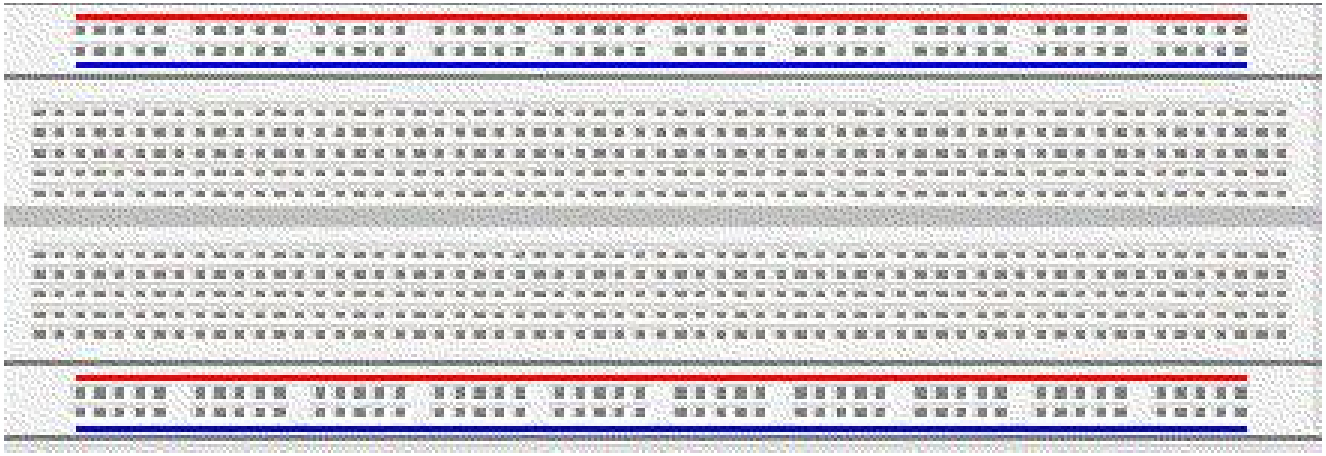

Breadboard

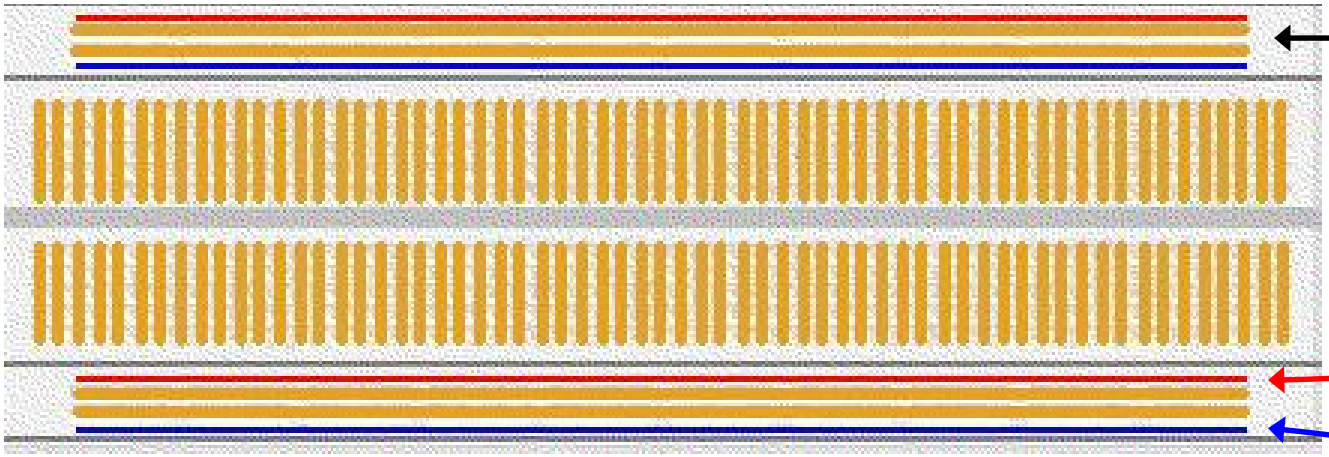

5.0 VDC supply rails

Red is +5.0 VDC

Internal Connections

Blue is 0.0 VDC

Transparent solderless breadboard showing the metal strips for tie points underneath.

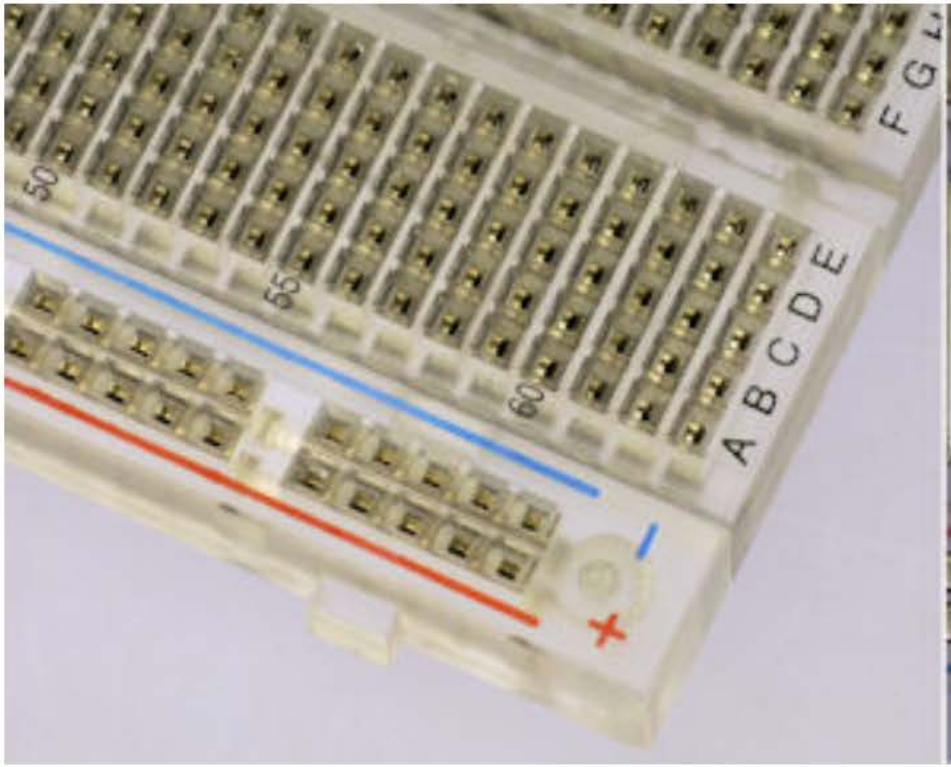

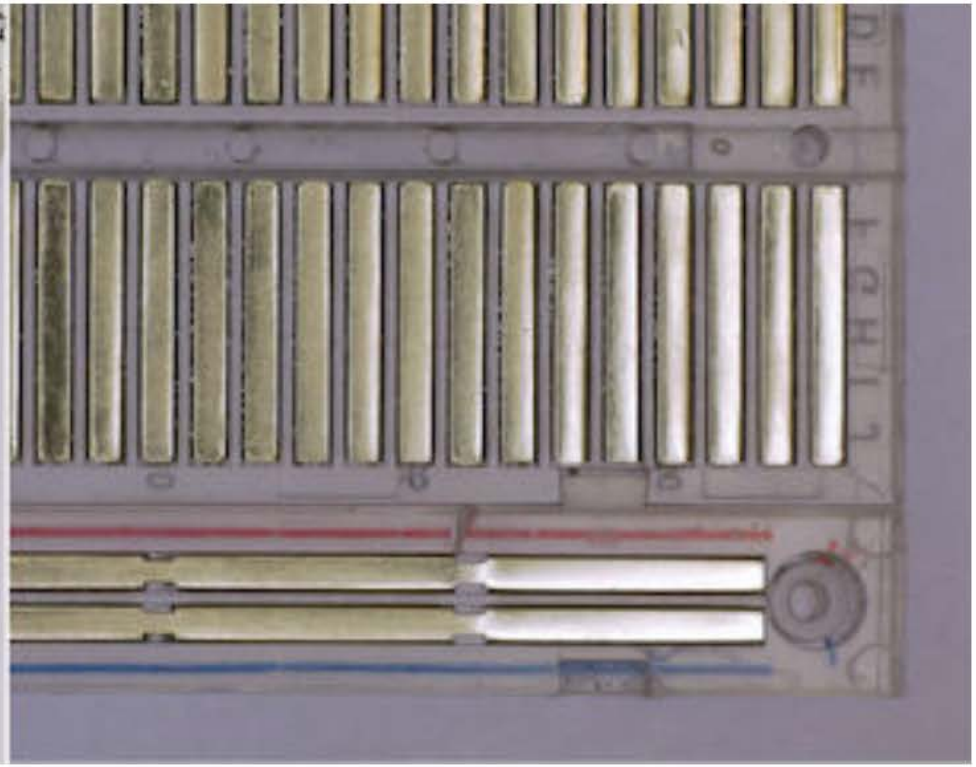

Top view

Bottom view

Close up of a jumper wire in a solderless breadboard socket.

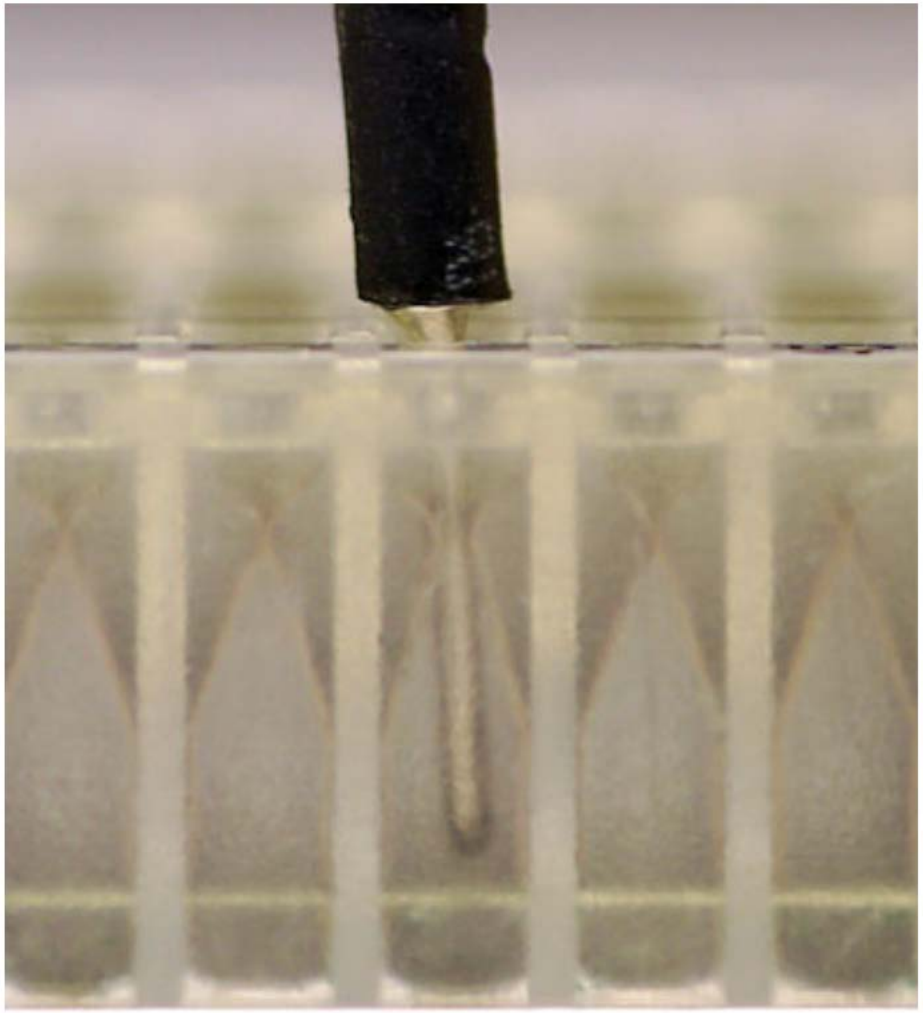

Do not force large diameter pins into the sockets.

Neatly wired board

Easier to debug

Required for this course

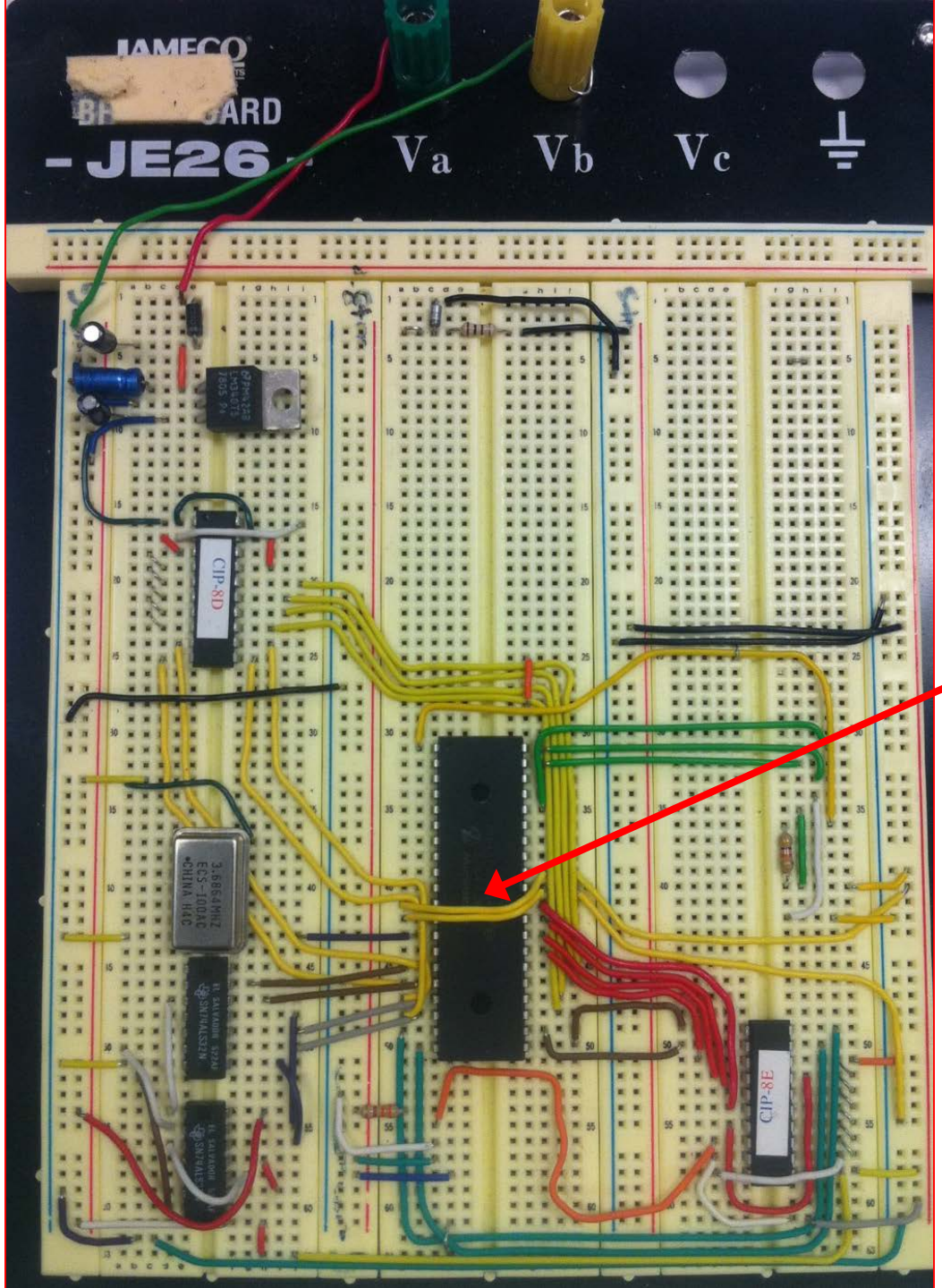

Use black wires for ground, red wires for power, other colors for signals

Avoid crossing over chips

Lorentz Climate Equations – Chaos Theory

Nonlinear System of Ordinary Differential Equations

$$\frac{\mathrm{d}x}{\mathrm{d}t} = \sigma(y - x),$$
$$\frac{\mathrm{d}y}{\mathrm{d}t} = x(\rho - z) - y,$$
$$\frac{\mathrm{d}z}{\mathrm{d}t} = xy - \beta z.$$

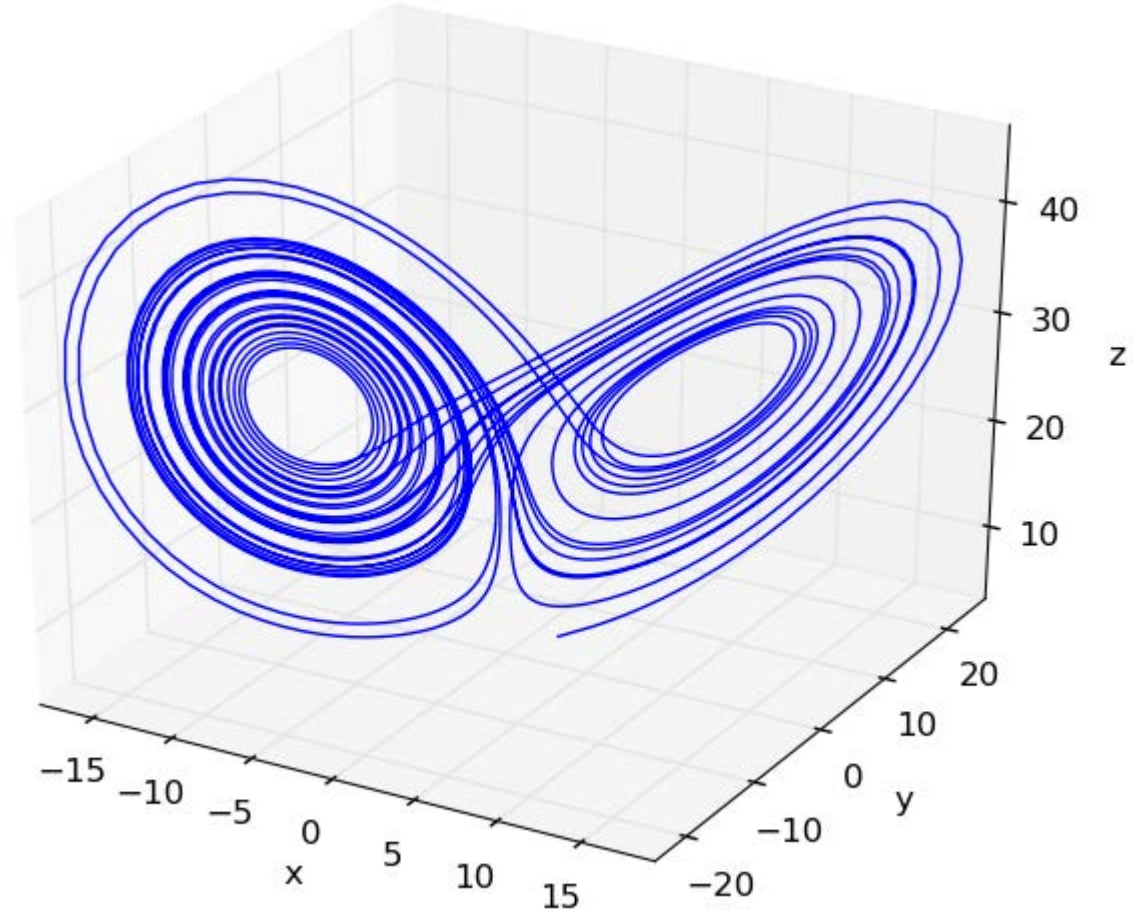

Lorentz Climate Equations – Chaos Theory

Nonlinear System of Ordinary Differential Equations

$$\frac{\mathrm{d}x}{\mathrm{d}t} = \sigma(y - x),$$
$$\frac{\mathrm{d}y}{\mathrm{d}t} = x(\rho - z) - y,$$
$$\frac{\mathrm{d}z}{\mathrm{d}t} = xy - \beta z.$$

Lorentz Climate Equations Solved by Analog Computer

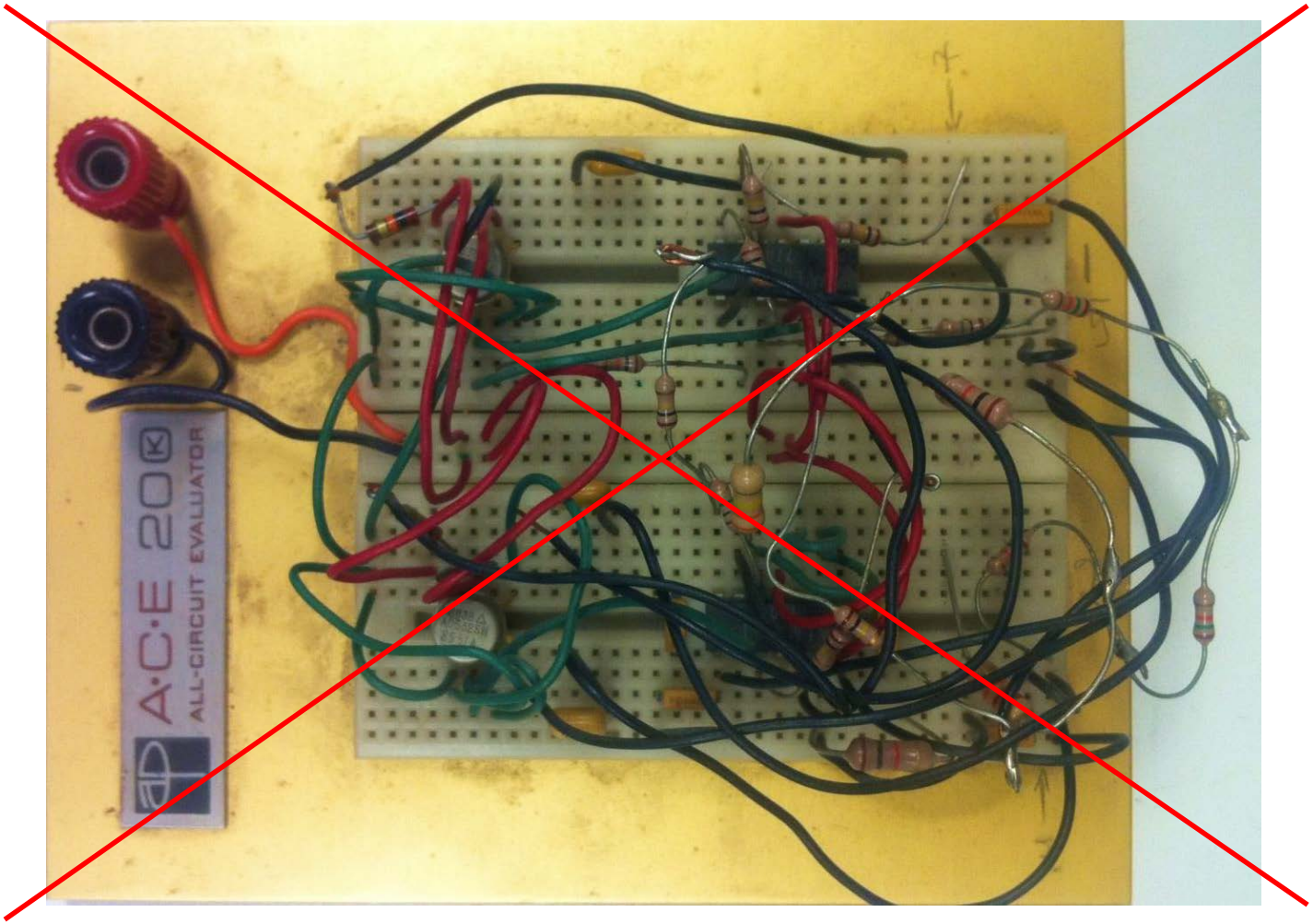

"It works" ≠ Good engineering design

Electrolytic capacitors must be connected with the correct polarity.

Radial Capacitor

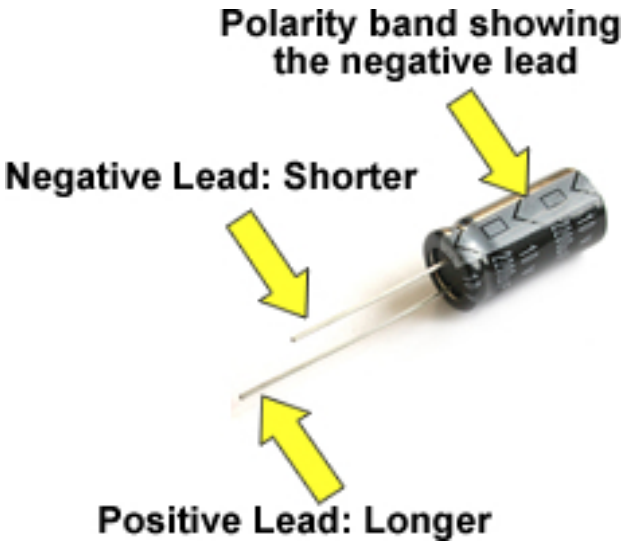

Axial Capacitor

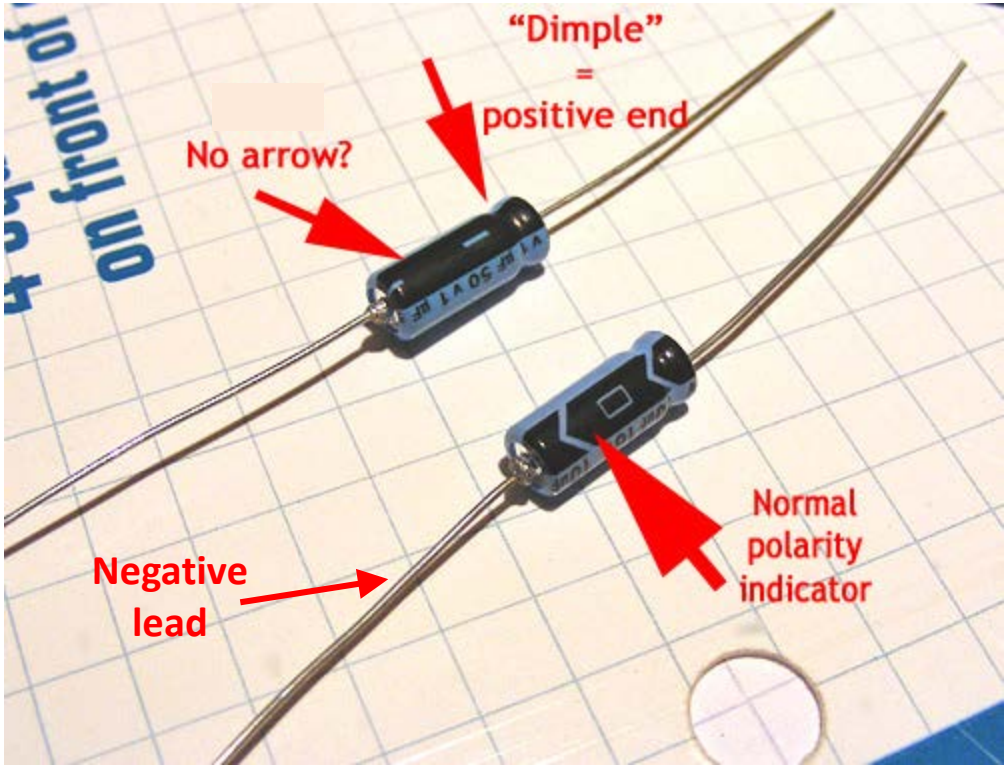

Diode

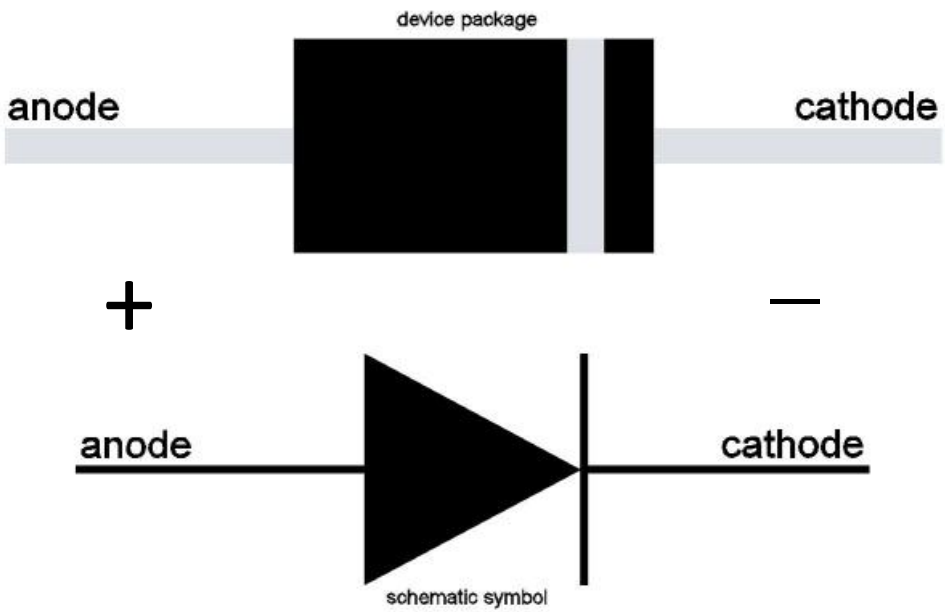

Light Emitting Diode (LED)

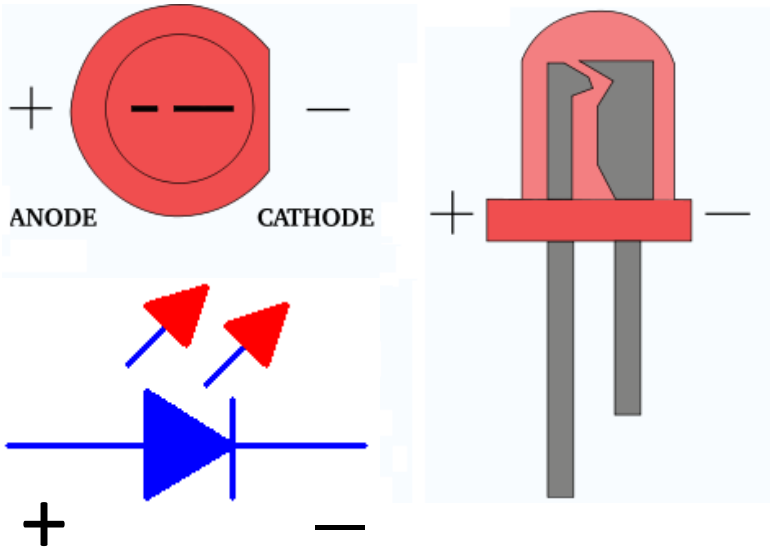

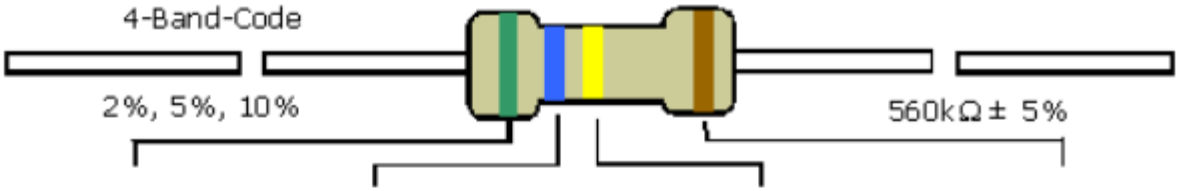

COLOR	1st BAND	2nd BAND	3rd BAND	MULTIPLIER	TOLERANCE	
Black	0	0	0	1Ω		
Brown	1	1	1	10Ω	± 1%	(F)
Red	2	2	2	100Ω	± 2%	(G)
Orange	3	3	3	1KΩ		
Yellow	4	4	4	10KΩ		
Green	5	5	5	100KΩ	±0.5%	(D)
Blue	6	6	6	1MΩ	±0.25%	(C)
Violet	7	7	7	10MΩ	±0.10%	(B)
Grey	8	8	8		±0.05%	
White	9	9	9			
Gold				0.1	± 5%	(J)
Silver				0.01	± 10%	(K)

http://www.hobby-hour.com/electronics/resistorcalculator.php

Lab 1 Outline

1. Breadboard Setup
2. Input/Output (I/O) Ports, Tristate Buffers
3. Power Supply Circuit
4. Hardware Layout for Lab 1
5. MPLAB Demo

PIC 16F877 Pin Diagram

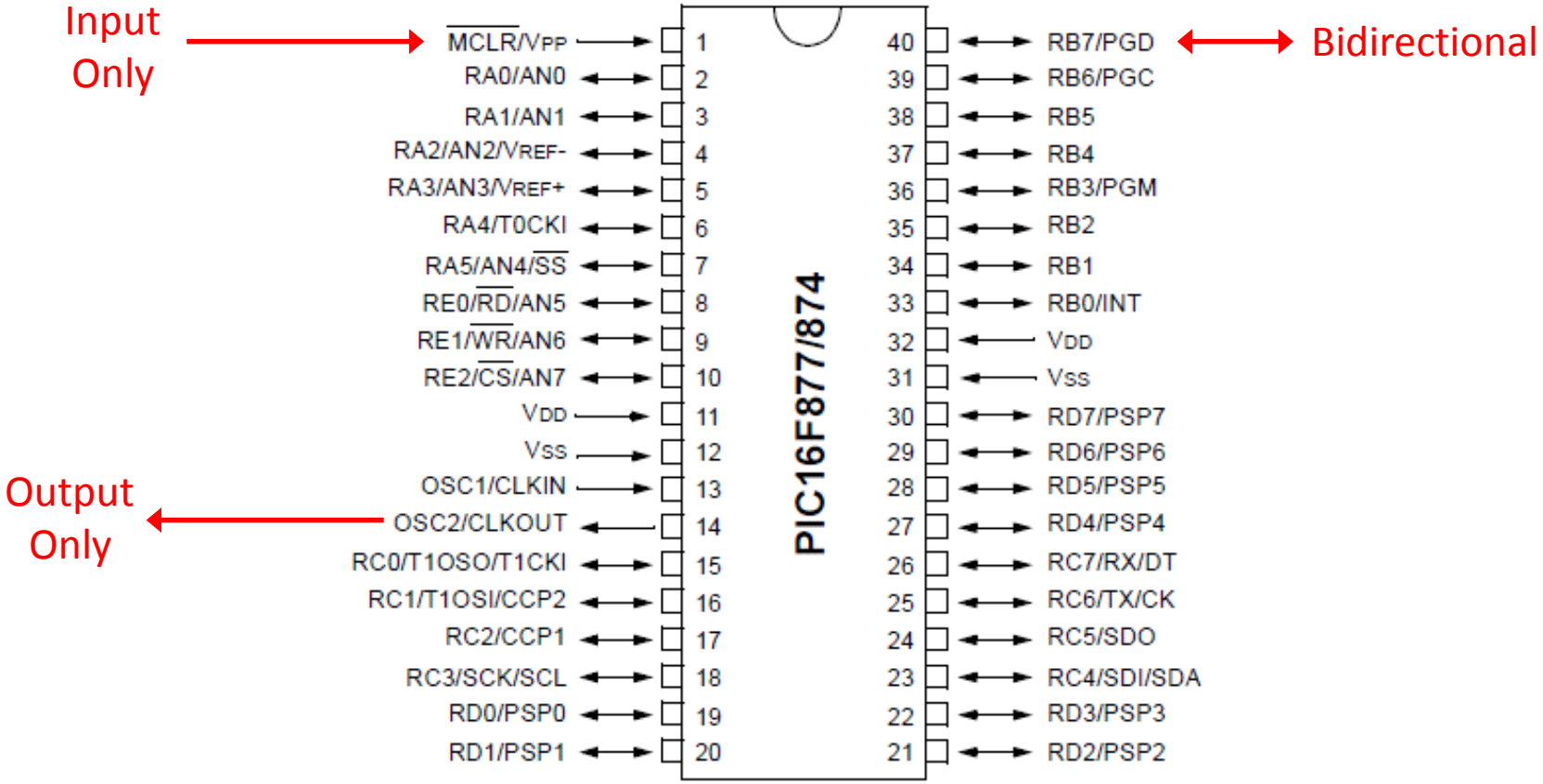

Page 1, Datasheet

TABLE 1-2: PIC16F874 AND PIC16F877 PINOUT DESCRIPTION

Pin Name	DIP Pin#	PLCC Pin#	QFP Pin#	I/O/P Type	Buffer Type	Description
OSC1/CLKIN	13	14	30	I	ST/CMOS(4)	Oscillator crystal input/external clock source input.
OSC2/CLKOUT	14	15	31	O	—	Oscillator crystal output. Connects to crystal or resonator in crystal oscillator mode. In RC mode, OSC2 pin outputs CLKOUT which has 1/4 the frequency of OSC1, and denotes the instruction cycle rate.
$\overline{\text{MCLR}}$/VPP	1	2	18	I/P	ST	Master Clear (Reset) input or programming voltage input. This pin is an active low RESET to the device.
						PORTA is a bi-directional I/O port.
RA0/AN0	2	3	19	I/O	TTL	RA0 can also be analog input0.
RA1/AN1	3	4	20	I/O	TTL	RA1 can also be analog input1.
RA2/AN2/VREF-	4	5	21	I/O	TTL	RA2 can also be analog input2 or negative analog reference voltage.
RA3/AN3/VREF+	5	6	22	I/O	TTL	RA3 can also be analog input3 or positive analog reference voltage.
RA4/T0CKI	6	7	23	I/O	ST	RA4 can also be the clock input to the Timer0 timer/ counter. Output is open drain type.
RA5/$\overline{\text{SS}}$/AN4	7	8	24	I/O	TTL	RA5 can also be analog input4 or the slave select for the synchronous serial port.
						PORTB is a bi-directional I/O port. PORTB can be soft-ware programmed for internal weak pull-up on all inputs.
RB0/INT	33	36	8	I/O	TTL/ST(1)	RB0 can also be the external interrupt pin.
RB1	34	37	9	I/O	TTL	
RB2	35	38	10	I/O	TTL	
RB3/PGM	36	39	11	I/O	TTL	RB3 can also be the low voltage programming input.
RB4	37	41	14	I/O	TTL	Interrupt-on-change pin.
RB5	38	42	15	I/O	TTL	Interrupt-on-change pin.
RB6/PGC	39	43	16	I/O	TTL/ST(2)	Interrupt-on-change pin or In-Circuit Debugger pin. Serial programming clock.
RB7/PGD	40	44	17	I/O	TTL/ST(2)	Interrupt-on-change pin or In-Circuit Debugger pin. Serial programming data.

Legend: I = input O = output I/O = input/output P = power
— = Not used TTL = TTL input ST = Schmitt Trigger input

Note 1: This buffer is a Schmitt Trigger input when configured as an external interrupt.
2: This buffer is a Schmitt Trigger input when used in Serial Programming mode.
3: This buffer is a Schmitt Trigger input when configured as general purpose I/O and a TTL input when used in the Parallel Slave Port mode (for interfacing to a microprocessor bus).
4: This buffer is a Schmitt Trigger input when configured in RC oscillator mode and a CMOS input otherwise.

Page 8, Datasheet

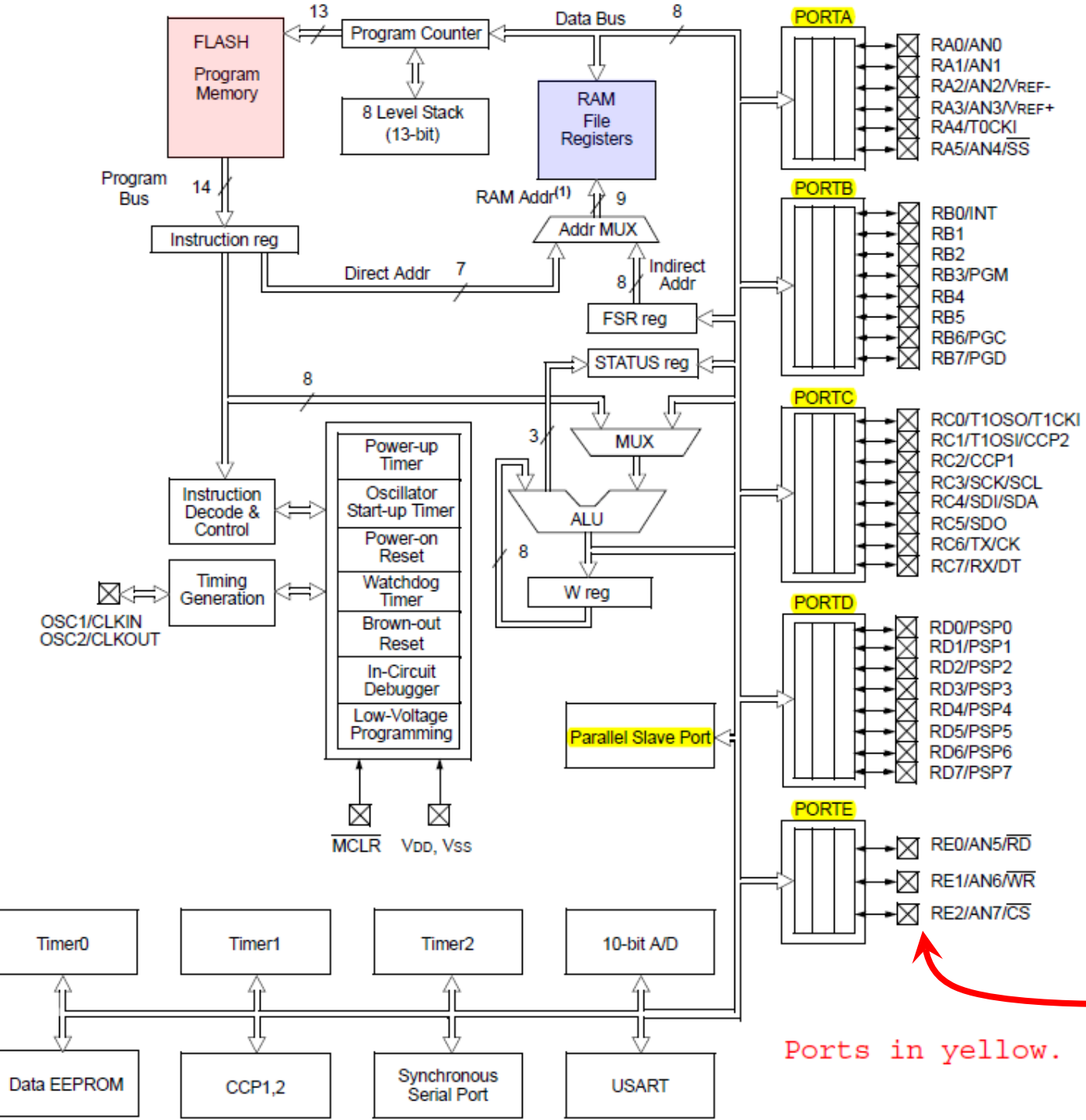

A closer look at the ports.

Ports can be used to input or output electrical signals.

Input or Output Pin

Ports in yellow.

TABLE 3-1: PORTA FUNCTIONS

Name	Bit#	Buffer	Function
RA0/AN0	bit0	TTL	Input/output or analog input.
RA1/AN1	bit1	TTL	Input/output or analog input.
RA2/AN2	bit2	TTL	Input/output or analog input.
RA3/AN3/VREF	bit3	TTL	Input/output or analog input or VREF.
RA4/T0CKI	bit4	ST	Input/output or external clock input for Timer0. Output is open drain type.
RA5/$\overline{SS}$/AN4	bit5	TTL	Input/output or slave select input for synchronous serial port or analog input.

Legend: TTL = TTL input, ST = Schmitt Trigger input

TABLE 3-2: SUMMARY OF REGISTERS ASSOCIATED WITH PORTA

Address	Name	Bit 7	Bit 6	Bit 5	Bit 4	Bit 3	Bit 2	Bit 1	Bit 0	Value on: POR, BOR	Value on all other RESETS
05h	PORTA	—	—	RA5	RA4	RA3	RA2	RA1	RA0	--0x 0000	--0u 0000
85h	TRISA	—	—	PORTA Data Direction Register						--11 1111	--11 1111
9Fh	ADCON1	ADFM	—	—	—	PCFG3	PCFG2	PCFG1	PCFG0	--0- 0000	--0- 0000

Legend: x = unknown, u = unchanged, - = unimplemented locations read as '0'.
Shaded cells are not used by PORTA.

Page 30, Datasheet

I/O Ports, Tristate I/O Buffers

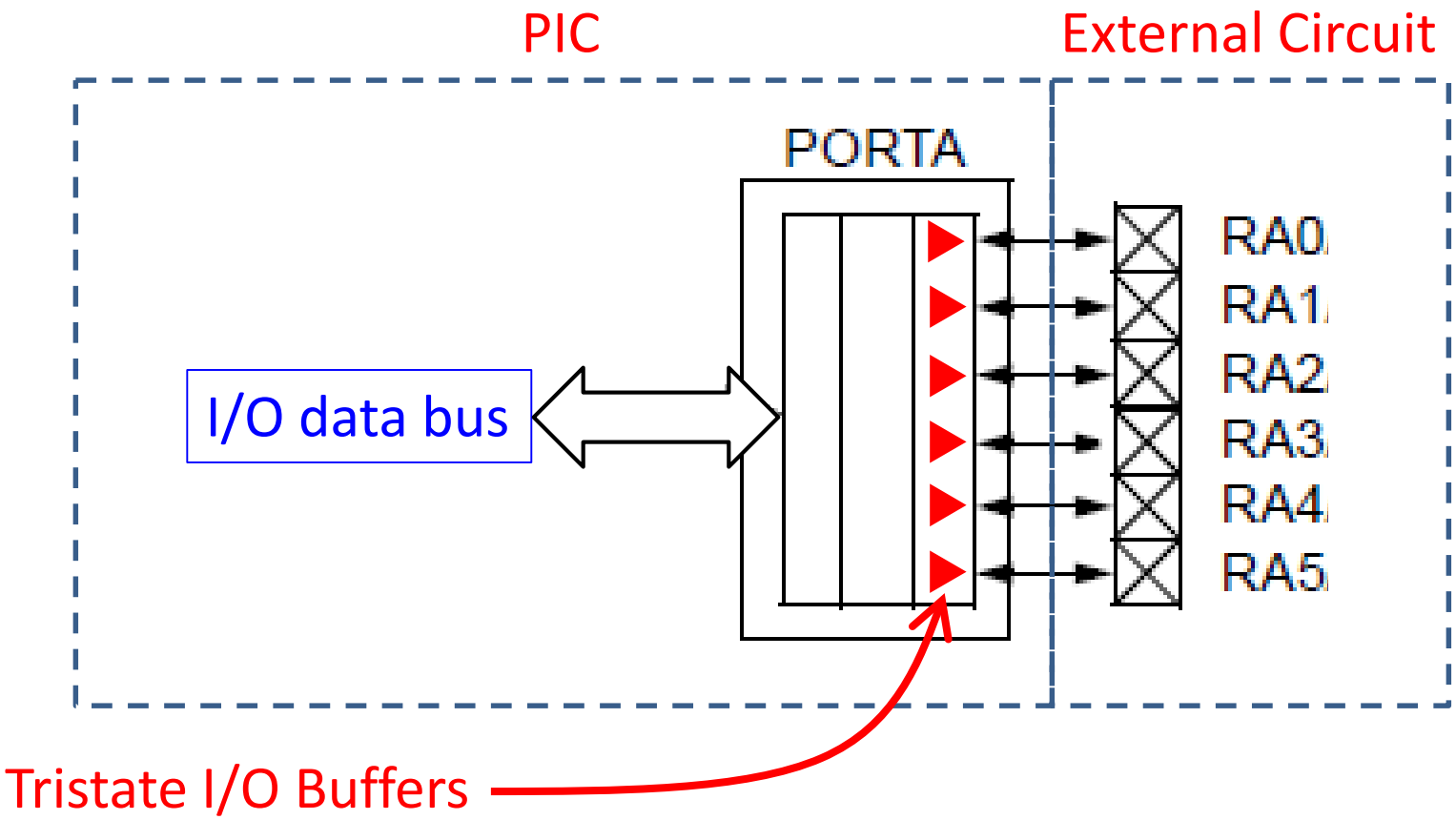

Tristate Input/Output Buffer Logic

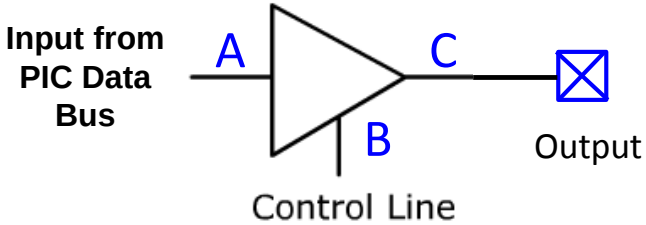

Truth Table

Input		Output
A	B	C
0	0	0
1		1
X	1	Z

Port used for output from PIC

Port used for input into PIC

X = "Don't care"

1. Configures the port for either input or output
2. Tristate = Three output logical states : C = 0, 1, or Z
3. B = 0 $\Rightarrow$ Port is used for output from PIC
4. B = 1 $\Rightarrow$ Port is used for input (high impedance input, Z = ∞)

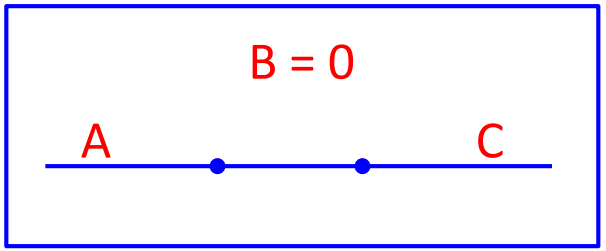

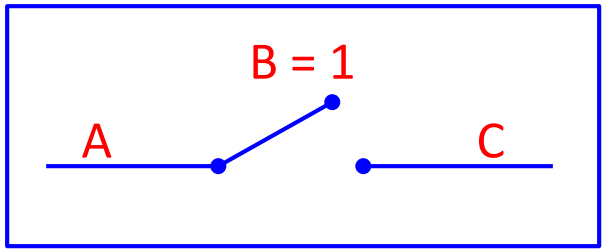

Floating Input

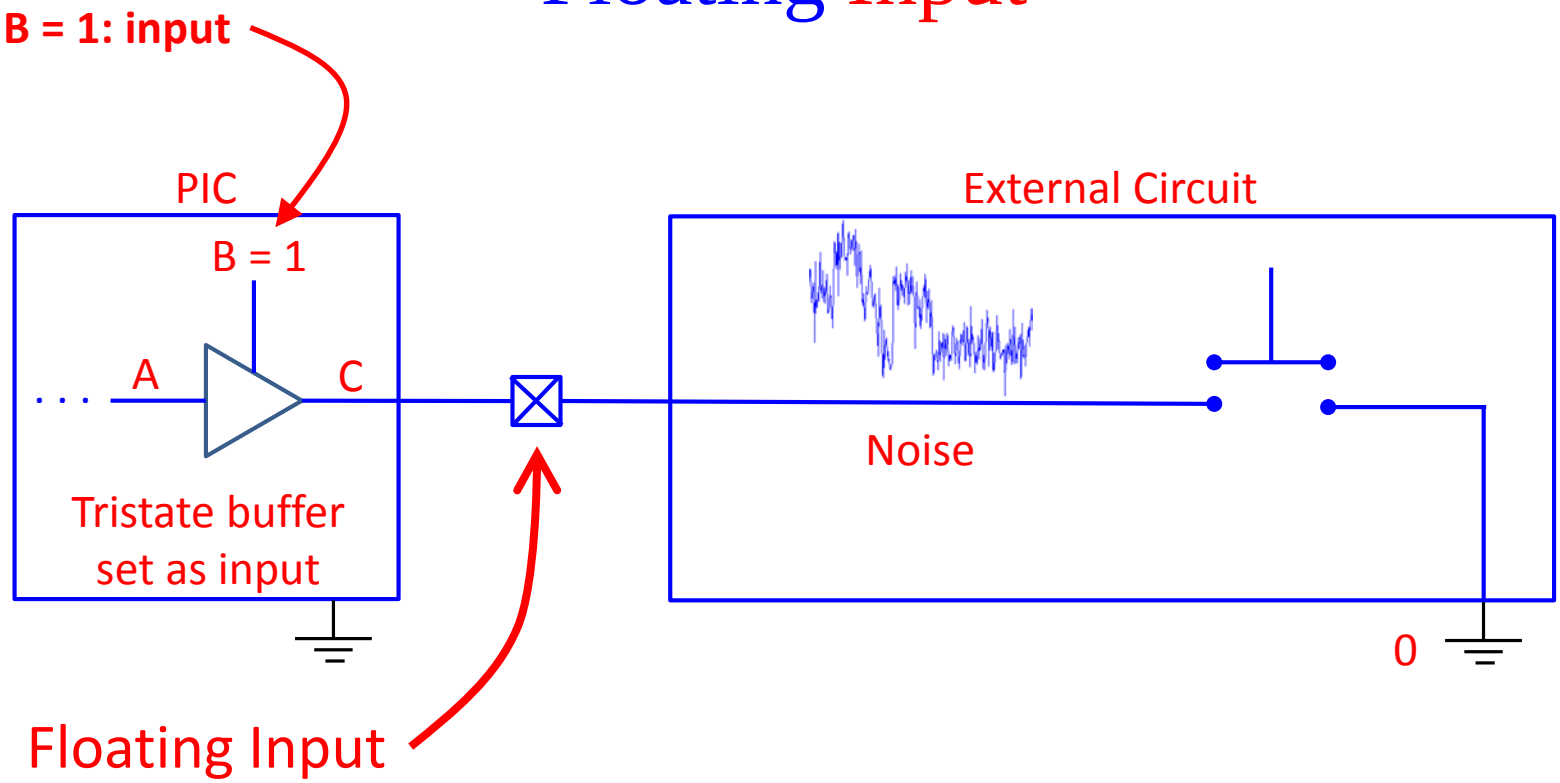

Floating input voltage:

1. Input voltage level undefined when pushbutton switch open..
2. Can cause high frequency switching of the 0, 1 logic levels in the input circuitry.
3. Can cause high power consumption and damage components.

Buffer Gate Voltage Levels for Transistor–Transistor Logic (TTL)

Logic Value: **1 =** High

0 = Low

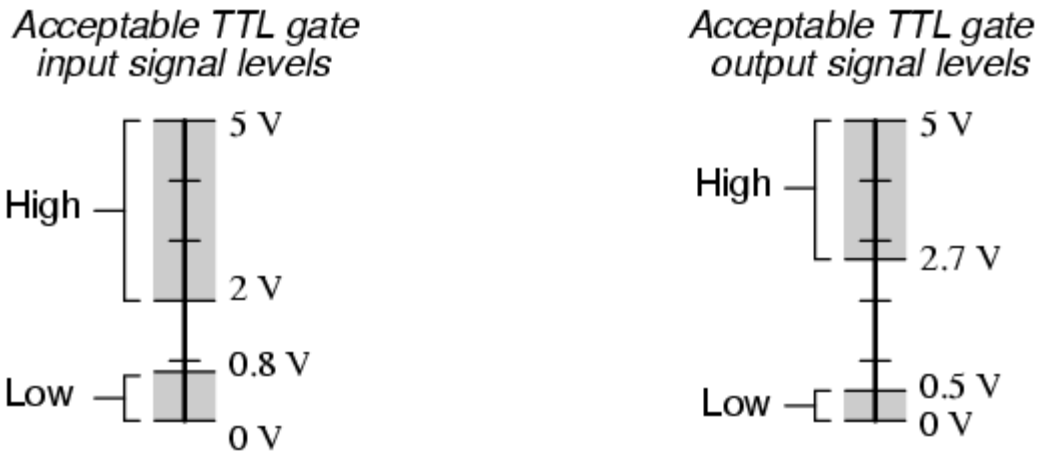

Pull-up Resistor for Input

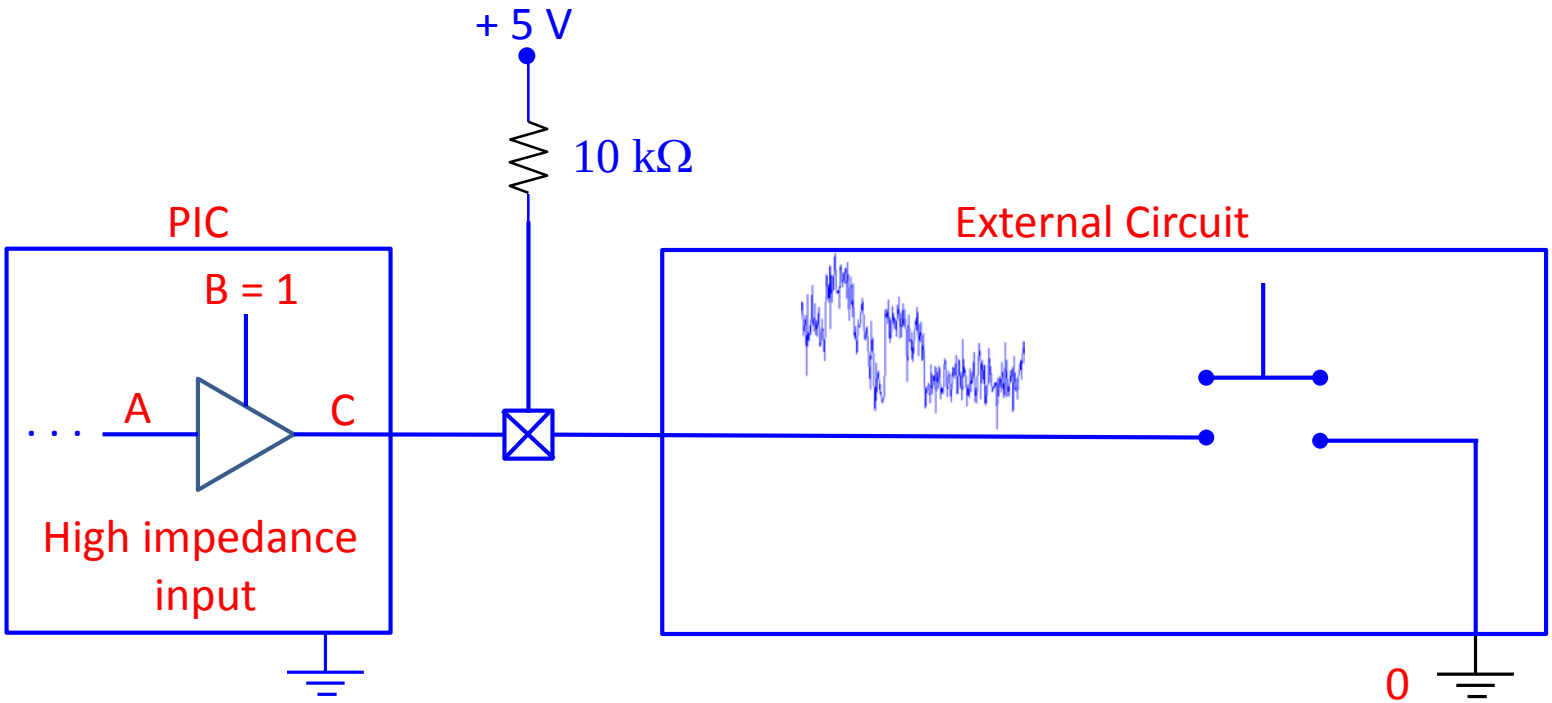

1. Holds input at valid logic level 1 (5 V) when external circuit is in an inactive state.
2. Resistor value should be large enough to limit current into the external circuit (usually between 1 KΩ and 10 KΩ).

Pull-down Resistor for Input

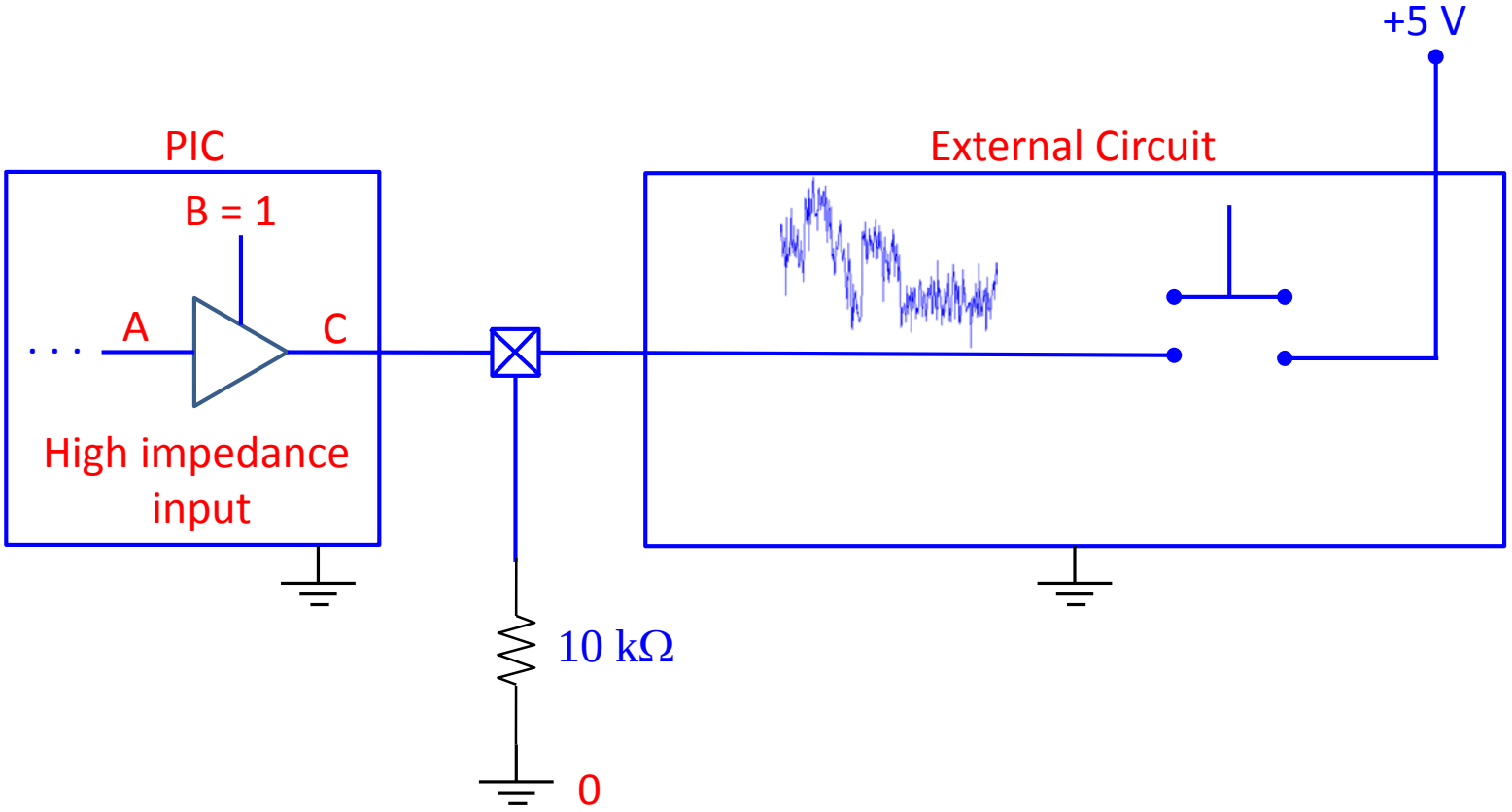

Holds input at valid logic level 0 (0 V) when external circuit is in an inactive state.

Active-Low Pins

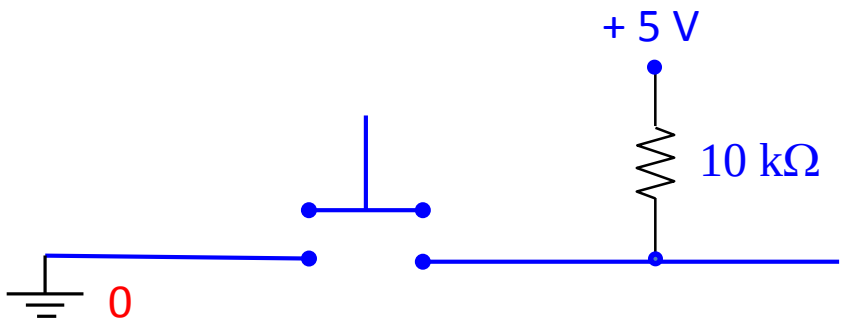

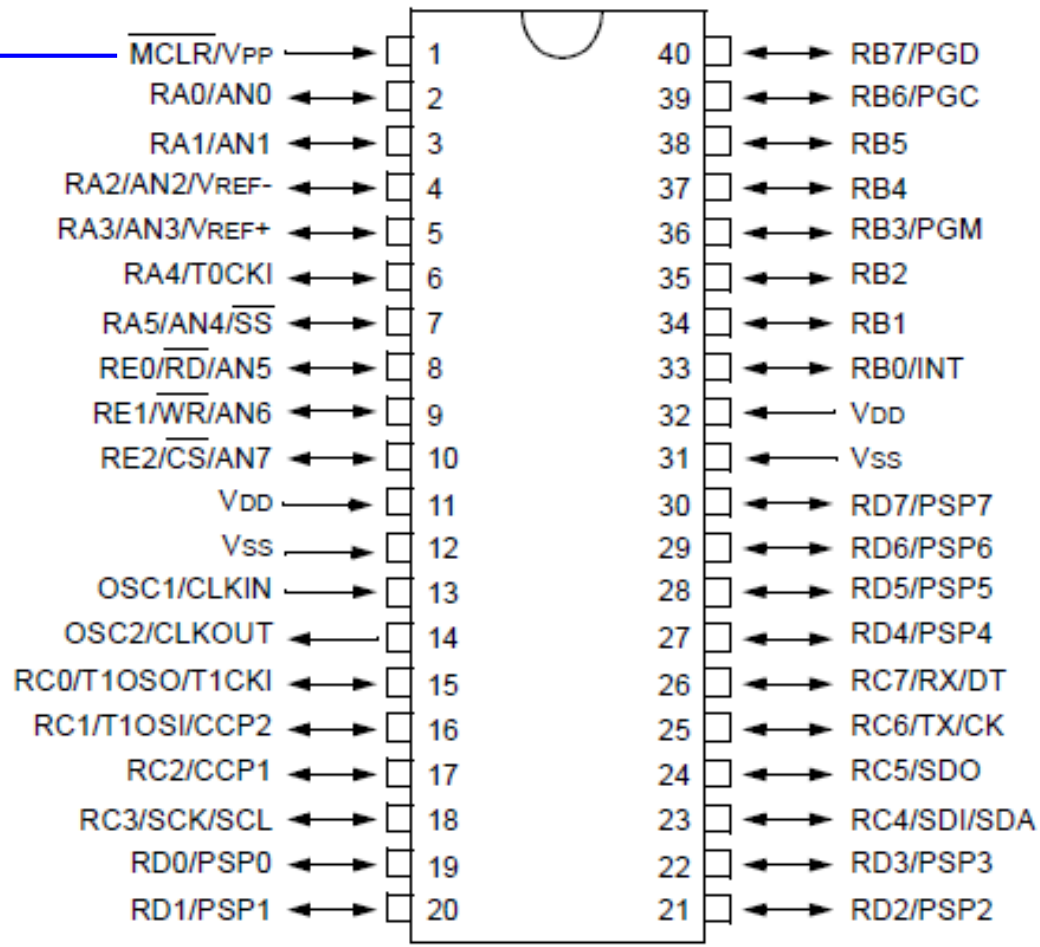

Active-low pins:

1. Indicated by a bar over the pin name.
2. Perform indicated function (are ACTIVE) when switched to the LOW (0 V) state.
3. Normally kept in high (+5 V) state.

Example:

The Master Clear Reset $\left(\overline{\text{MCLR}}\right)$ pin resets the PIC when its voltage transitions from high to low.

Schmitt Triggers

Switch Input-Output Characteristic

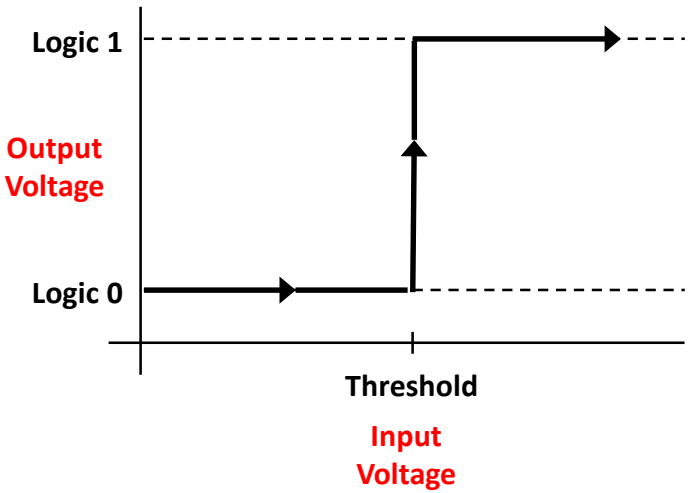

Schmitt Trigger Input-Output Characteristic (Hysteresis)

- Used as input buffers on some ports.
- Reduces rapid switching from noise near the threshold input voltage.

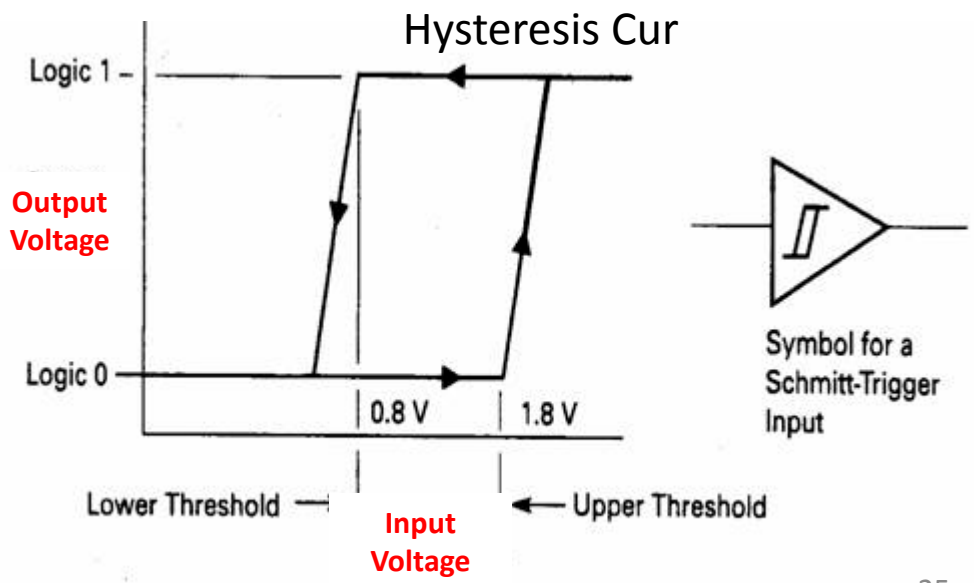

Schmitt Triggers

Voltage Level

Logic Level

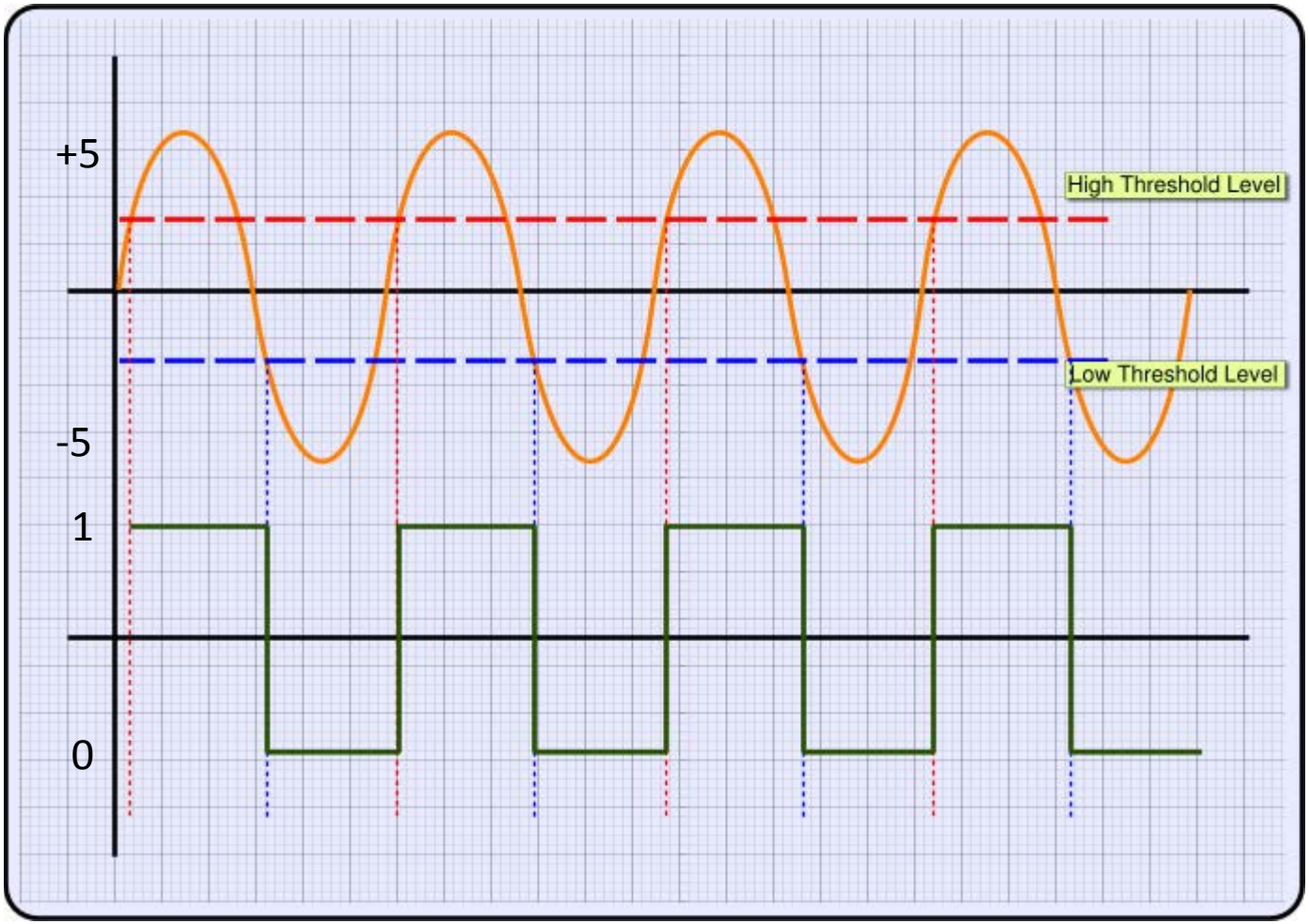

Lab 1 Outline

1. Breadboard Setup
2. Input/Output (I/O) Ports, Tristate Buffers
3. Power Supply Circuit
4. Hardware Layout for Lab 1
5. MPLAB Demo

Power Supply Circuit

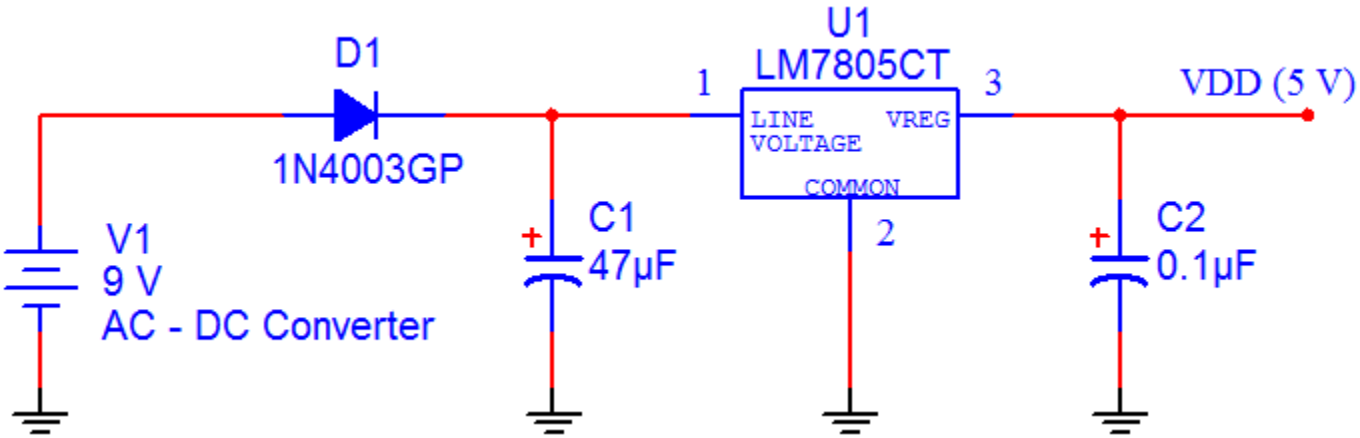

5 volt power supply for the PIC and breadboard components such as the oscillator. The PICkit 3 ICD is powered from the USB port.

D1: Reverse polarity protection diode

C1, C2: Ripple/noise filter capacitors

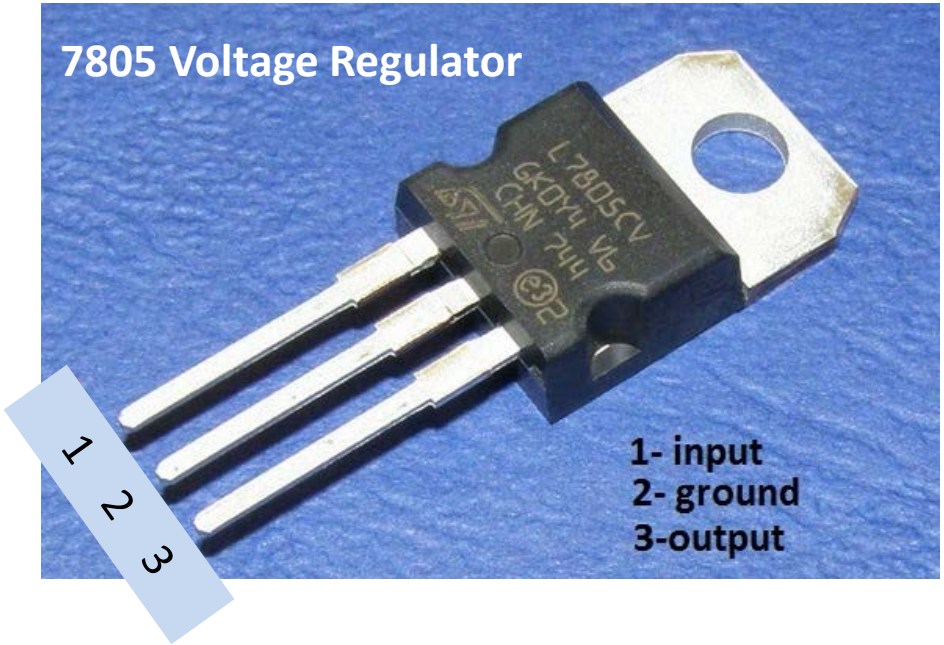

AC-DC Converter

1. AC-DC wall adapter

2. Nominal output rating: 9 VDC @ 800 mA (some are 1000 mA)

3. This is an unregulated power supply. This means that the output voltage will vary depending on load, but will be at least 9 VDC at full load. As the load increases, the internal resistance of the transformer causes the output voltage to drop. See this article: Unregulated Power Supply Tutorial.

4. The output voltage may be as high as 15 VDC with no load and lower than 9VDC with a heavy load.

AC-DC Converter

Full-Wave Unregulated Power Supply

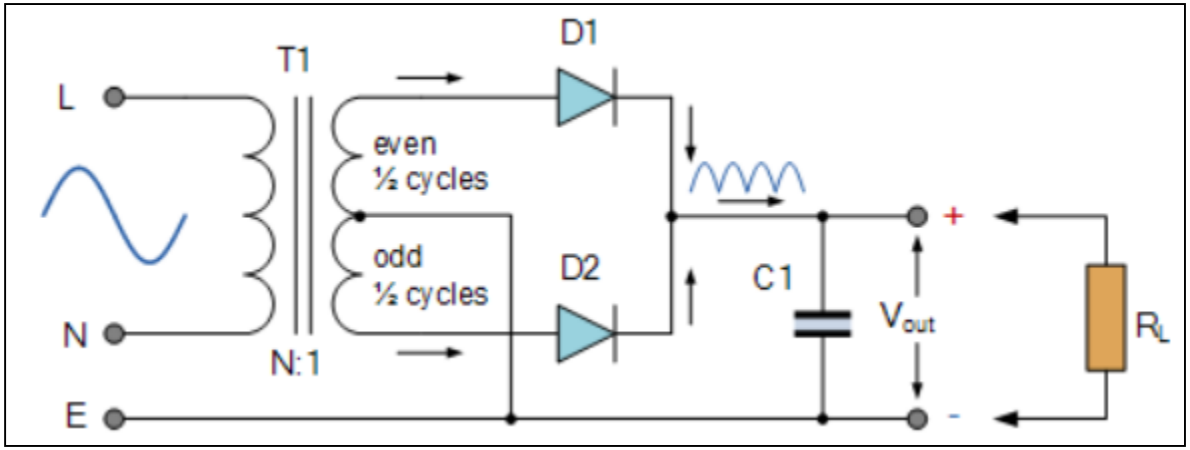

Full-Wave Rectifier Waveforms

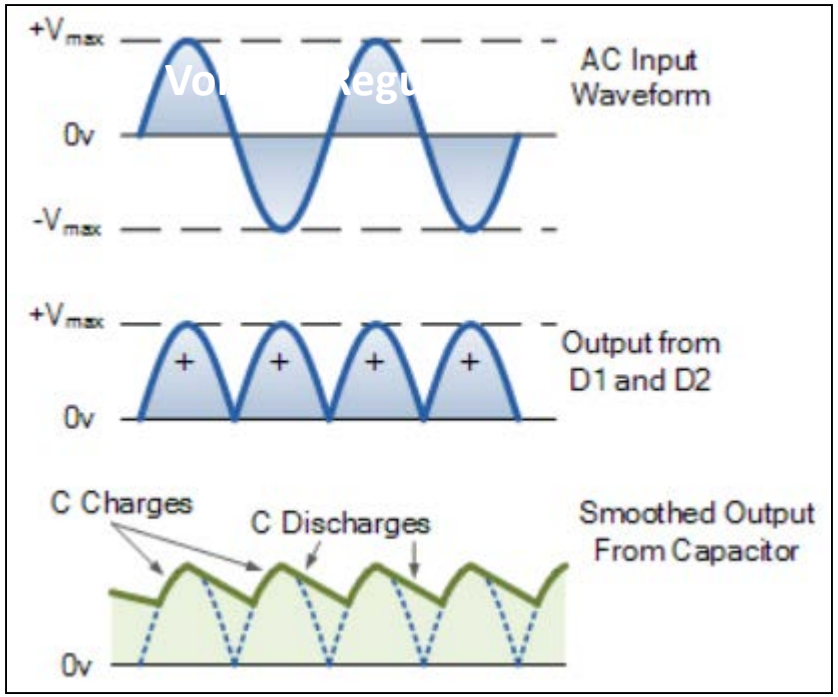

Lab 1 Outline

1. Breadboard Setup
2. Input/Output (I/O) Ports, Tristate Buffers
3. Power Supply Circuit
4. Hardware Layout for Lab 1
5. MPLAB Demo

Hardware layout for lab01.asm

Important Note:

The circuit shown in the following pictures will be used in all the remaining labs (except for the red LED).

In order to have your Lab 1 circuit approved, it MUST be wired neatly as shown in later slides below. The resistors and capacitor leads must be trimmed so that they do not get disturbed during subsequent assemblies.

In-Circuit Debugger (ICD): PICkit 3

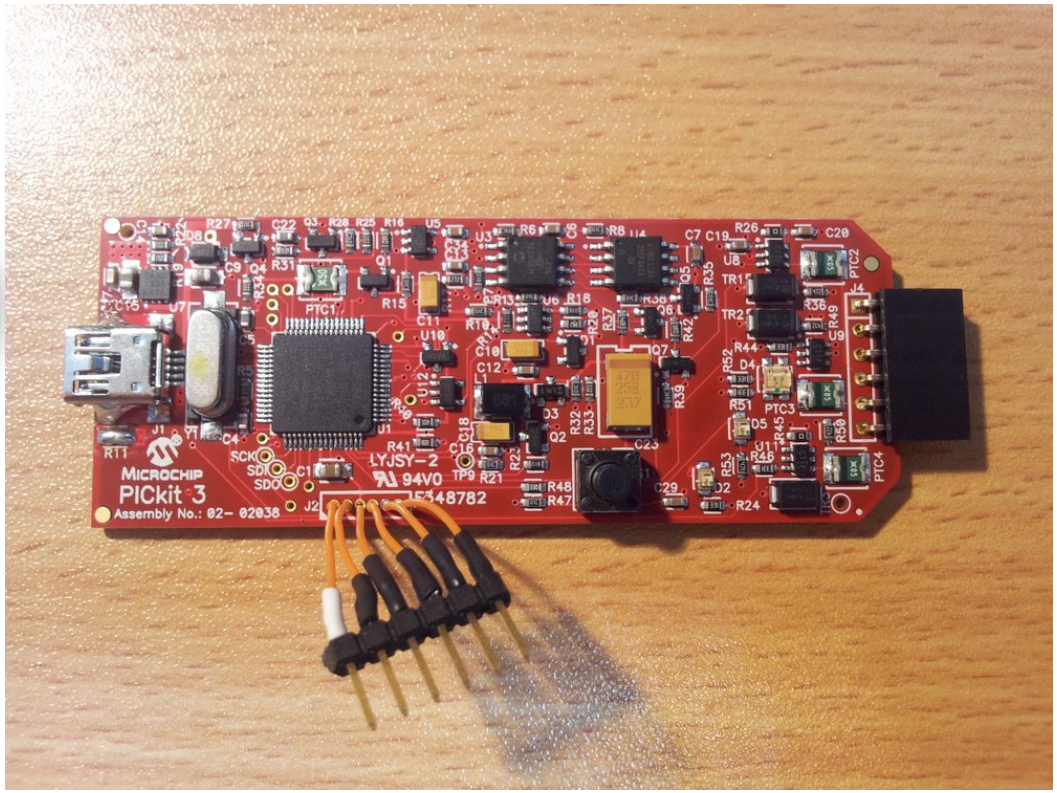

- Power is supplied to the PICkit 3 by the USB connection to the computer.

- Power is supplied to the microcontroller by the LM7805 regulated power supply

In-Circuit Debugger (ICD): PICkit 3

FIGURE 1-1: PICkit™ 3 MCU PROGRAMMER/DEBUGGER

Legend:

1 – Lanyard Connection
2 – USB Port Connection
3 – Pin 1 Marker
4 – Programming Connector
5 – Status LEDs
6 – Push Button

In-Circuit Debugger (ICD): PICkit 3

1.2.5 Status LEDs

The Status LEDs indicate the status of the PICkit 3.

1. **Power** (green) – Power is supplied to the PICkit 3 via the USB port.
2. **Active** (blue) – The PICkit 3 has connection to the PC USB port and the communication link is active.
3. **Status:**

   Busy (yellow) – The PICkit 3 is busy with a function in progress, such as programming.

   Error (red) – The PICkit 3 has encountered an error.

1.2.6 Push Button

The push button is used for Programmer-To-Go. See **Chapter 6. "PICkit 3 Programmer-To-Go"**.

See PICkit 3 User's Guide on course website.

In-Circuit Debugger (ICD): PICkit 2

6-pin cable interface to PIC

USB interface to PC

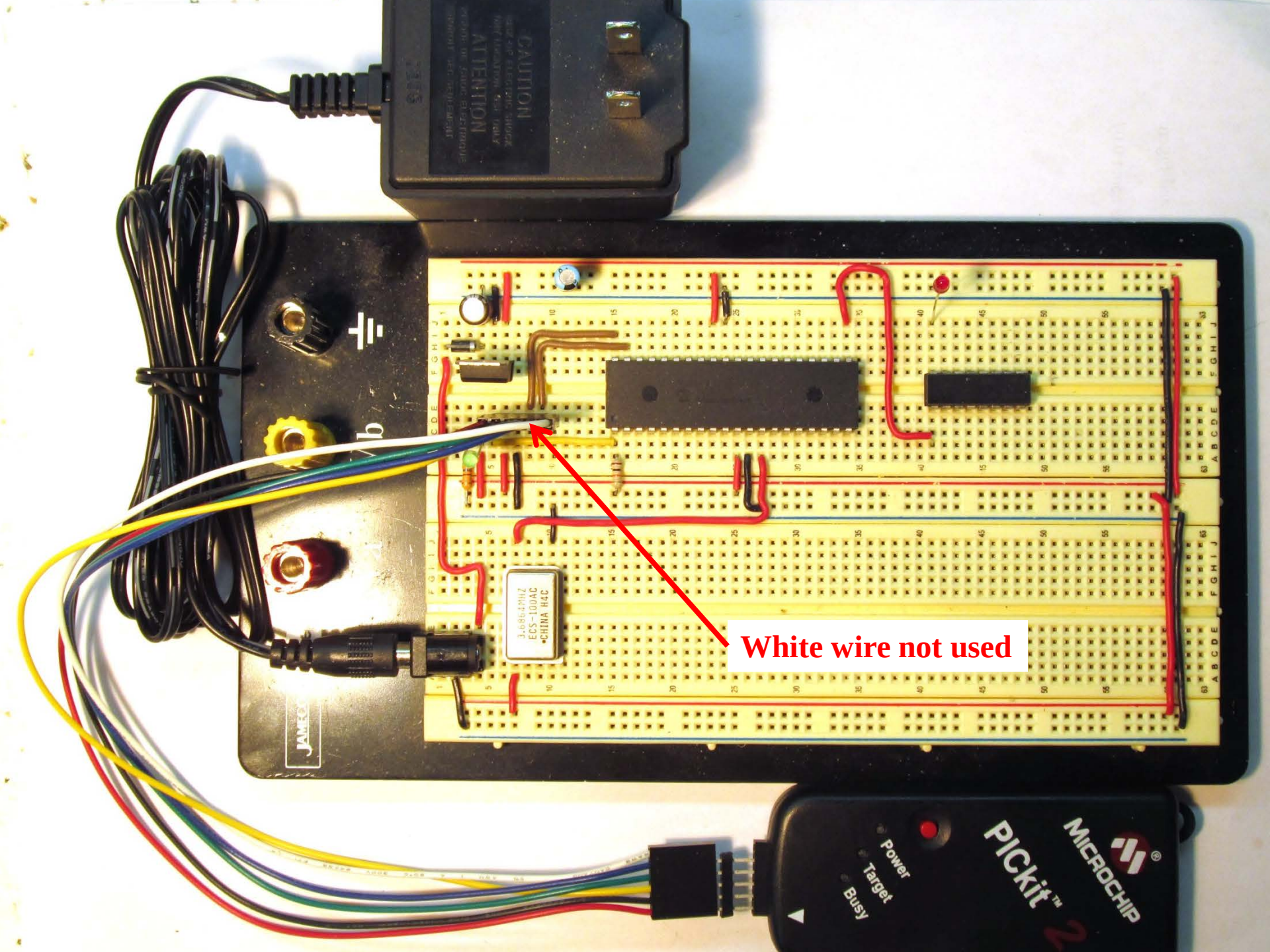
CAUTION
ATTENTION
ECS-100AC
•CHINA H4C
Power
Target
Busy
PICkit™
MICROCHIP
White wire not used

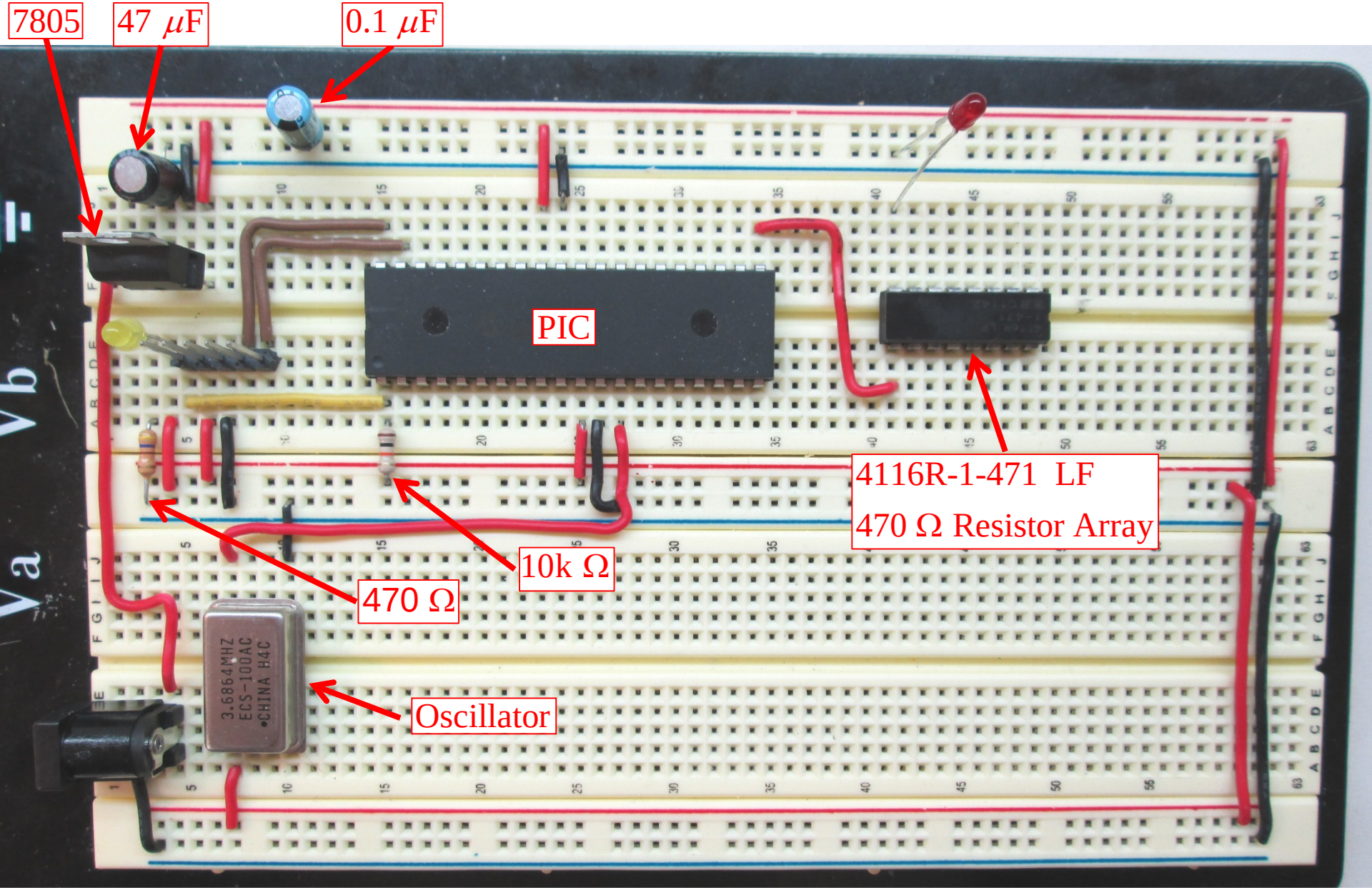
7805
47 μF
0.1 μF
PIC
4116R-1-471 LF
470 Ω Resistor Array
10k Ω
470 Ω
Oscillator
3.6864MHZ
ECS-100AC
•CHINA H4C

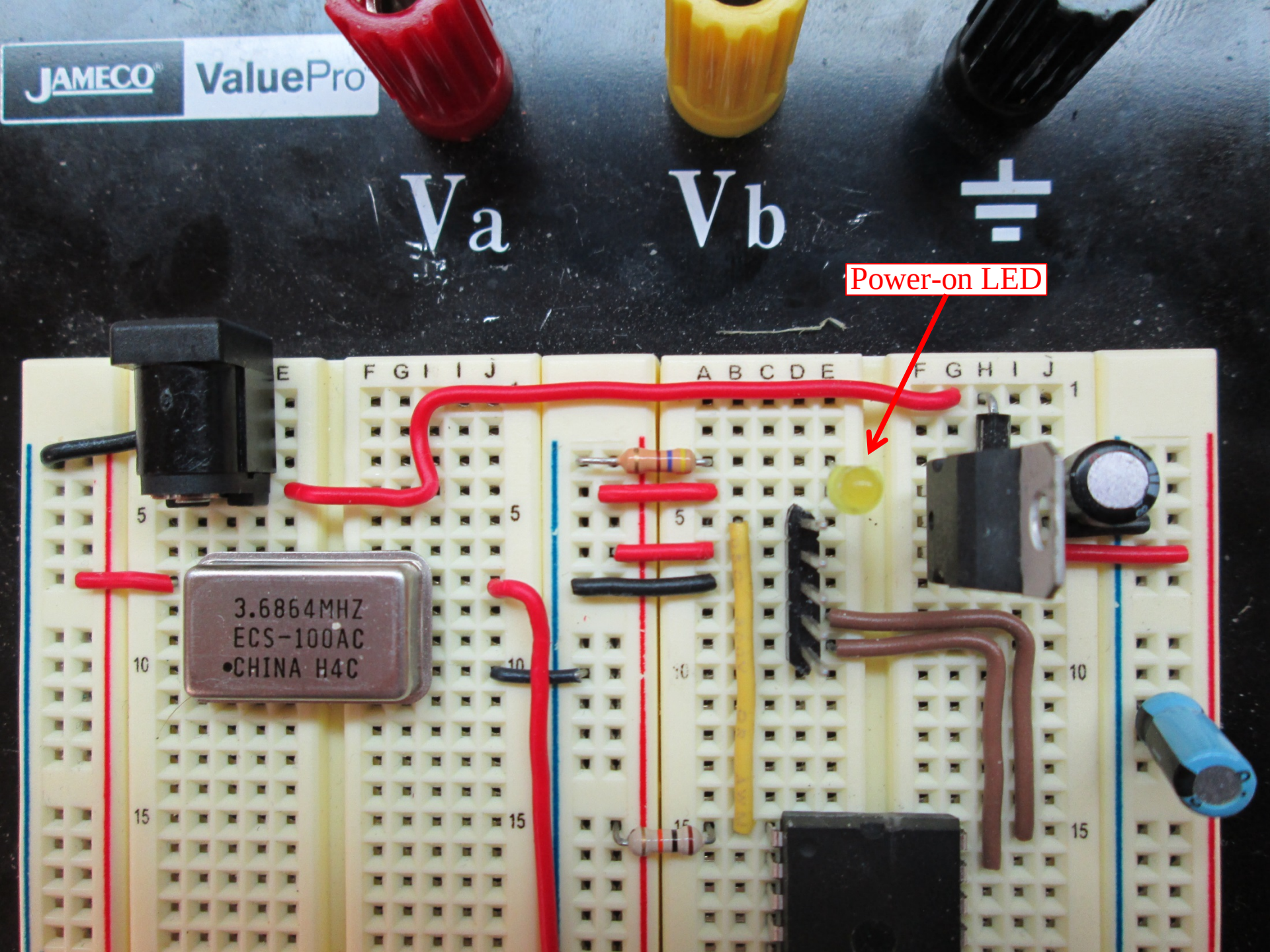
JAMECO
ValuePro
Va
Vb
Power-on LED
3.6864MHZ
ECS-100AC
•CHINA H4C

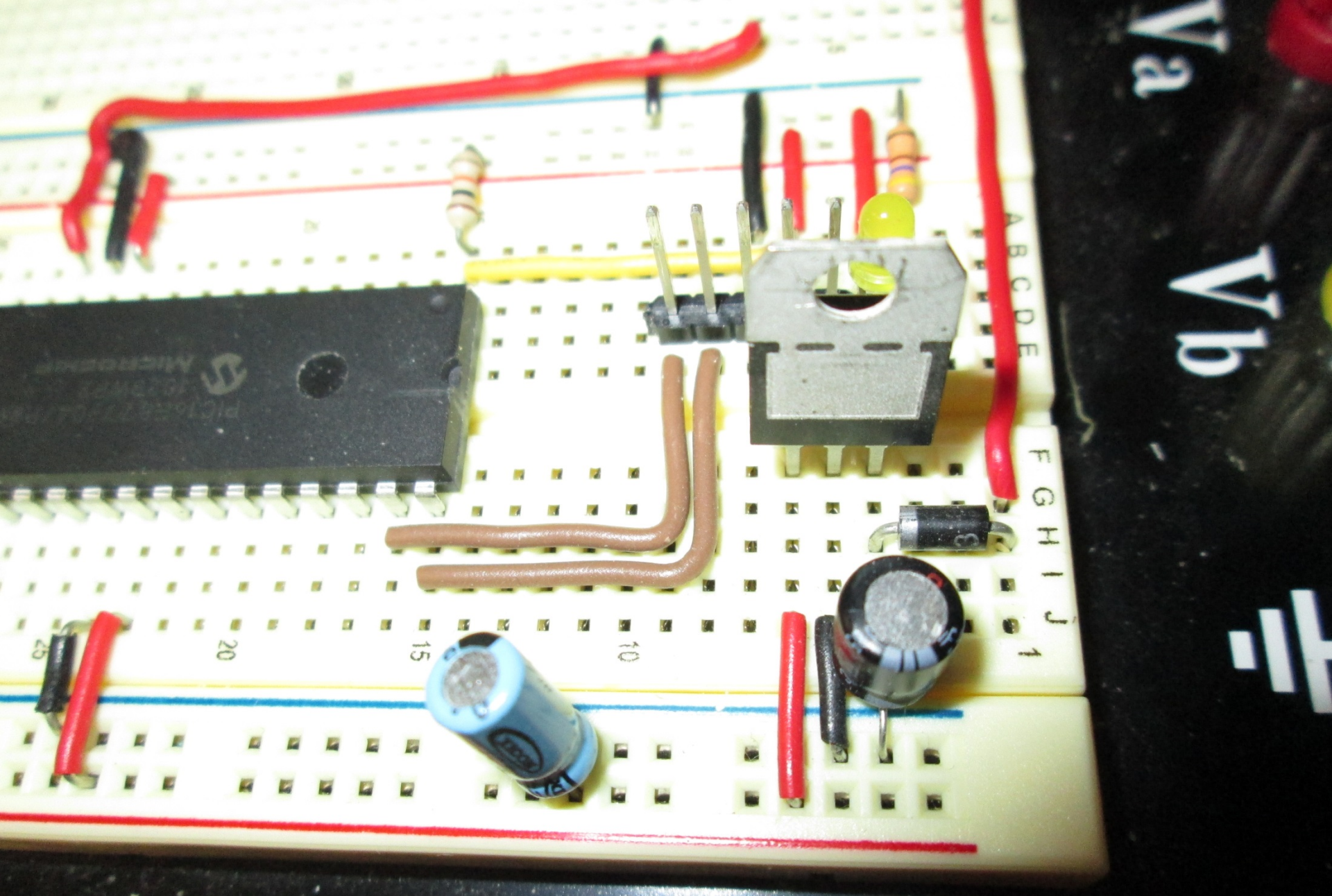
Va
Vb
A B C D E F G H I J
1
10
15
20
25

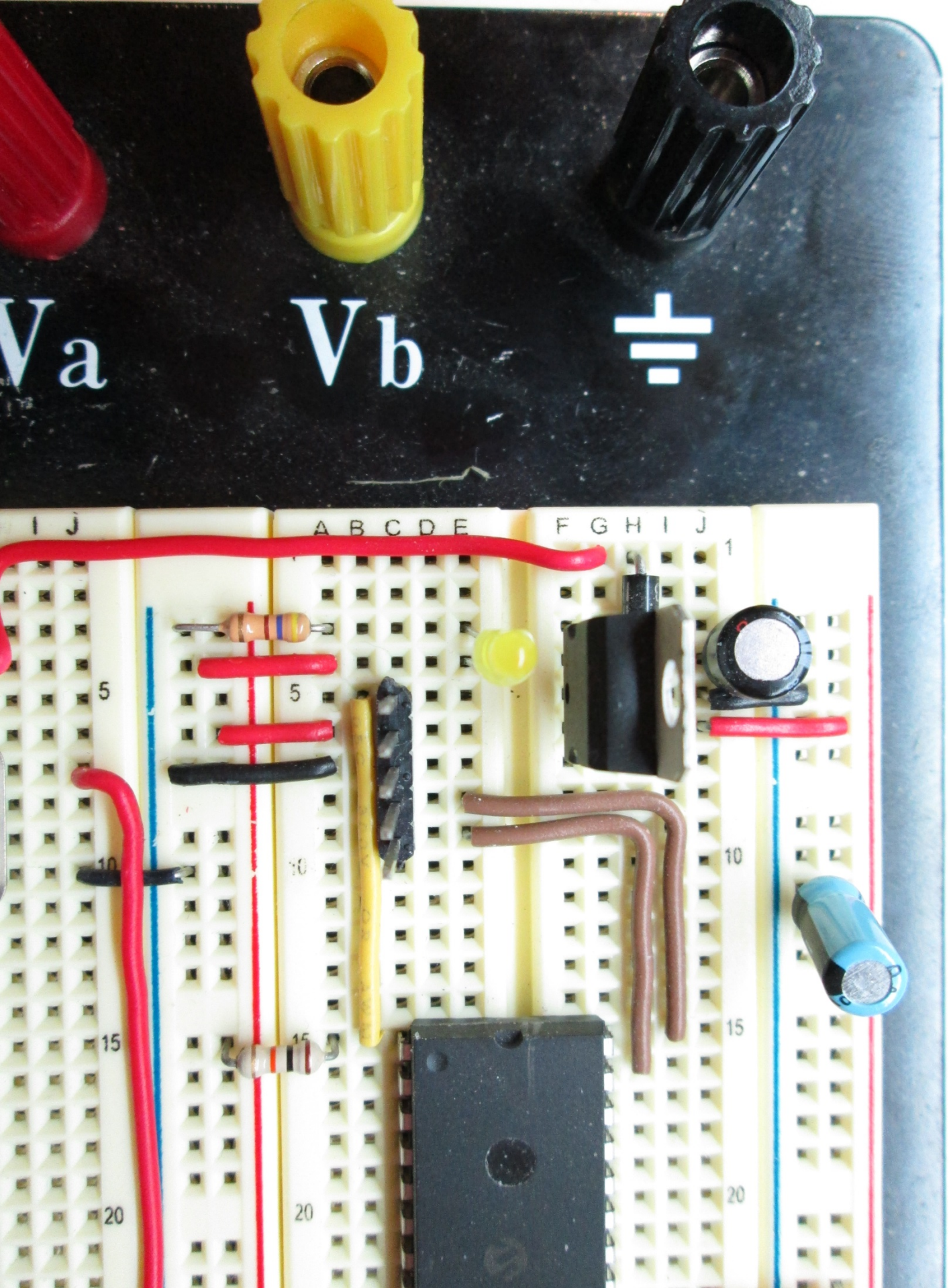
Va
Vb
A B C D E
F G H I J
1
5
10
15
20

Power Rail Jumpers

Note: Some breadboards have split power rails as shown below.
You need to put jumpers across the rails.

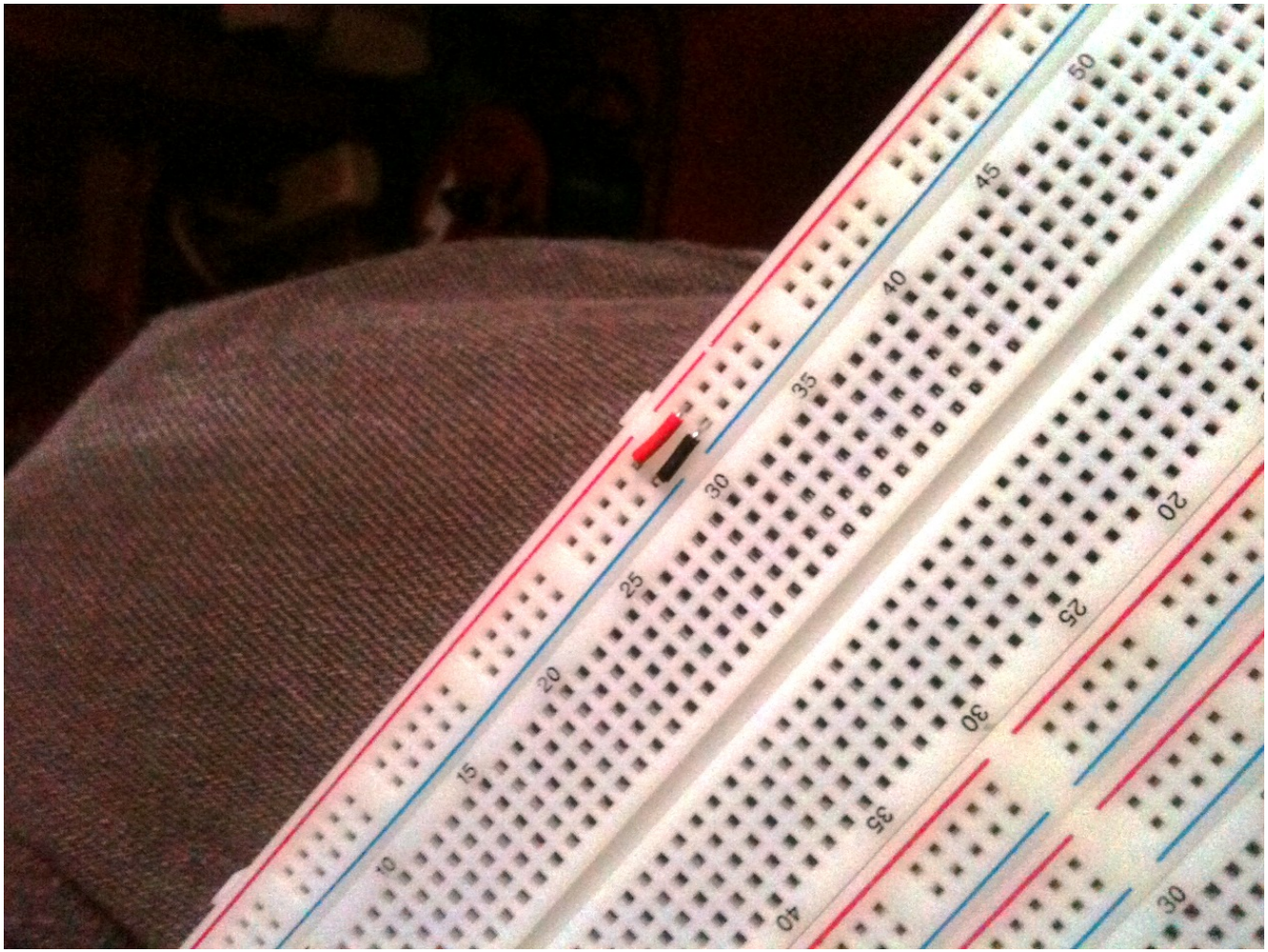

PRT-10811 - DC Barrel Jack Adapter

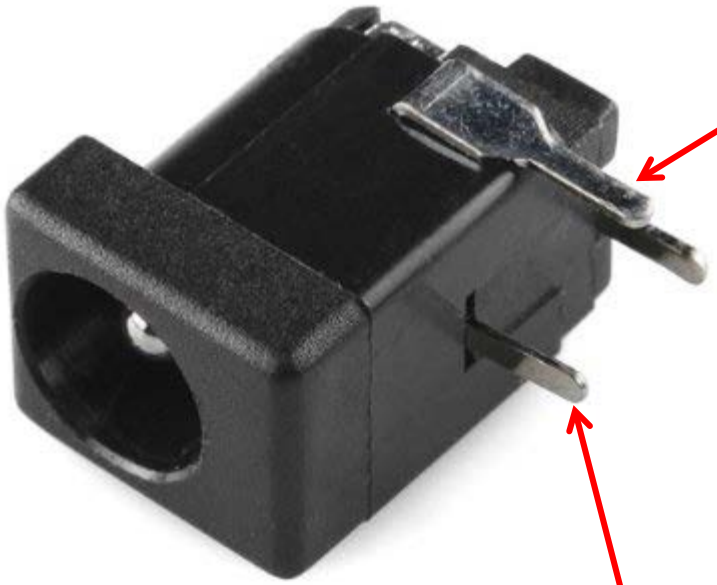

Pin 3

Pin 1 is positive and connected to the center pin of the barrel.

Pins 2 and 3 are negative and connected together internally.

Pin 2

The leads are not very long, so you may want to glue the adapter to the breadboard. We have some Gorilla Glue in the lab.

PICkit 2 Connections

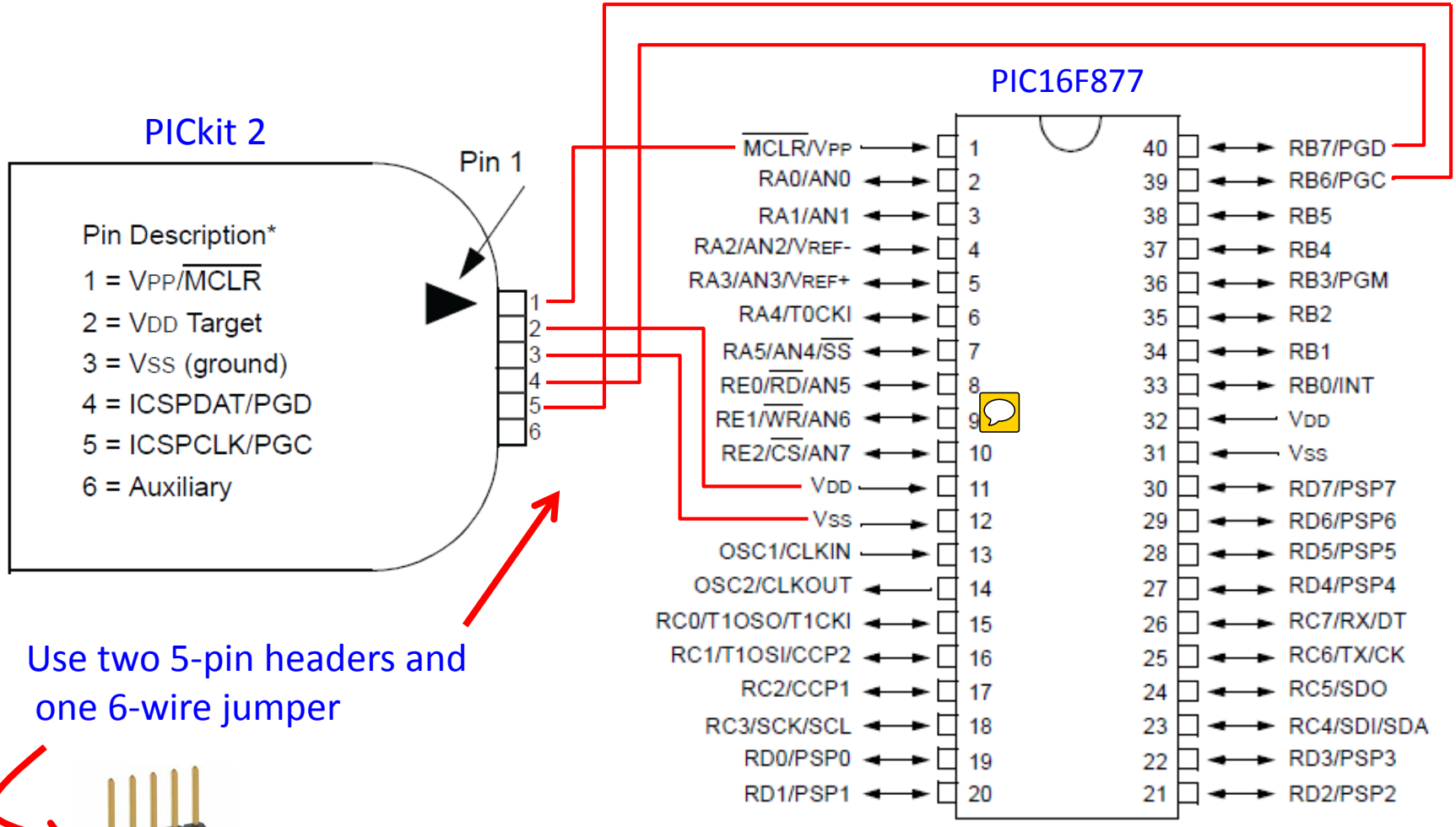

Use two 5-pin headers and one 6-wire jumper

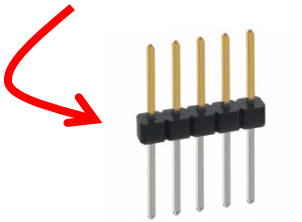

5-pin header (2 required) and 6-pin cable

Digi-Key S1232E-36-ND

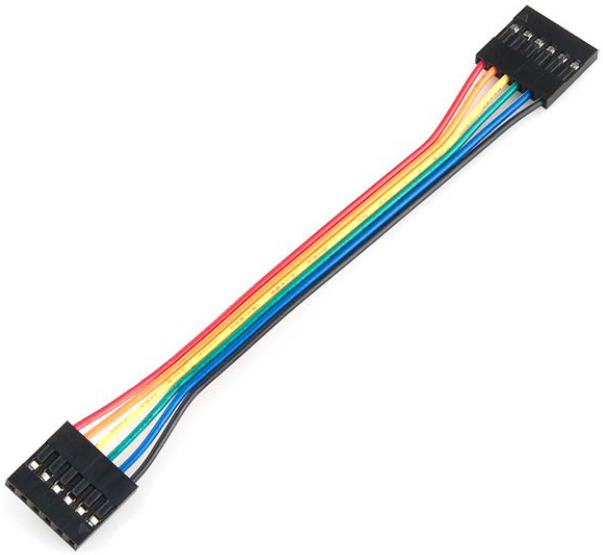

Oscillator (Clock) Frequency
3.6864 MHz

$$1 \text{ Clock cycle } = 1/(3.6864 \text{ MHz}) \approx 0.271\,\mu\text{s}$$

$$1 \text{ Instruction cycle} = 4 \text{ clock cycles} \approx 1.09\,\mu\text{s}$$

Crystal Oscillator Connections

PIN CONNECTIONS	
#1	NC
#7	CASE GND
#8	OUTPUT
#14	+5 V DC

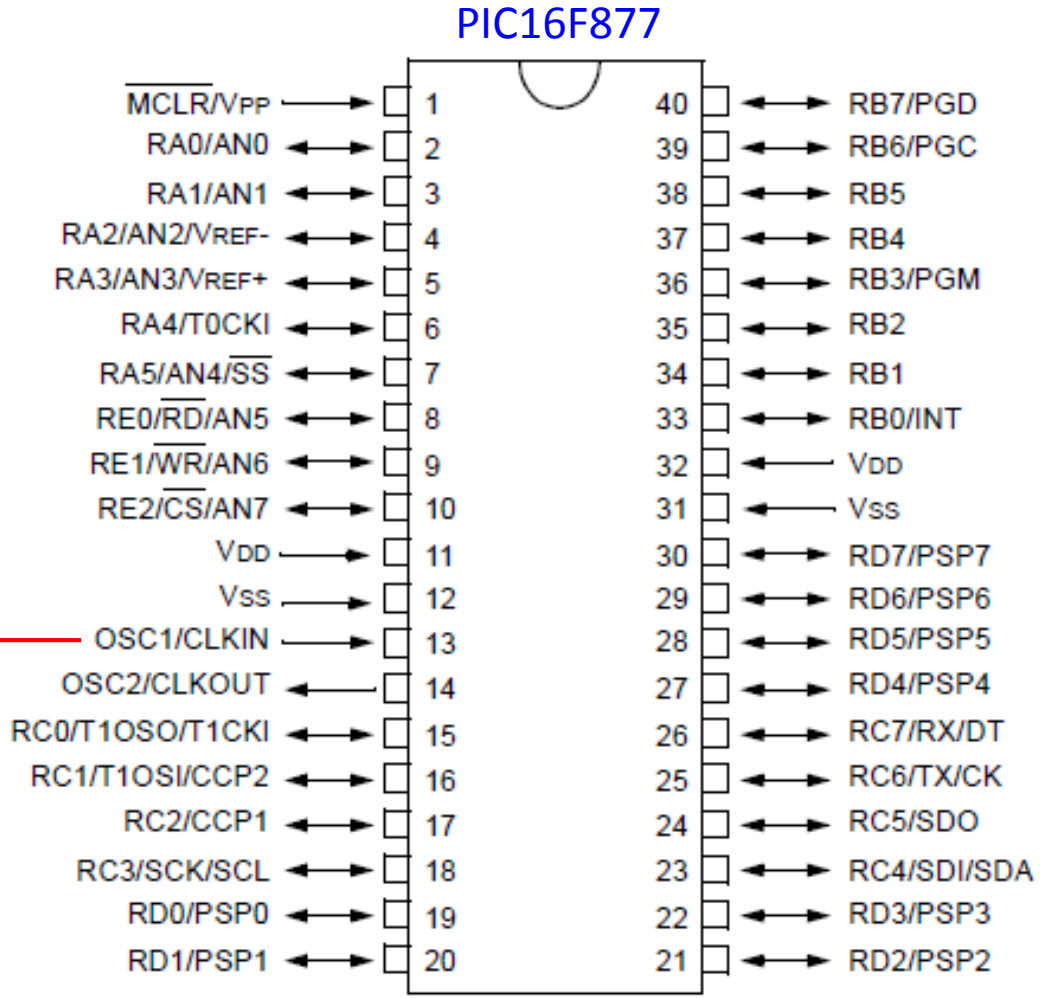

Schematic for lab01.asm

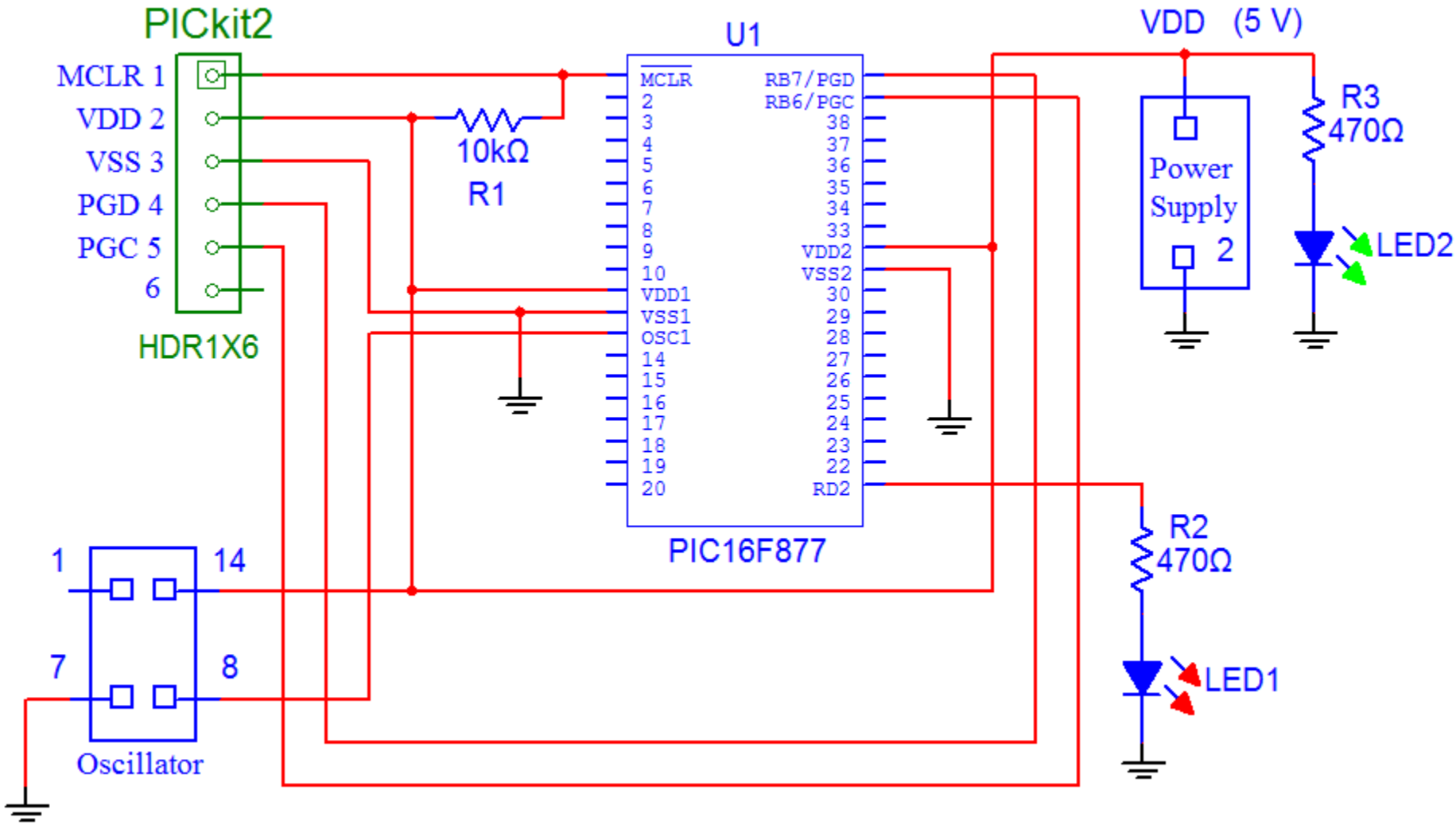

Lab 1 Outline

1. Breadboard Setup
2. Input/Output (I/O) Ports, Tristate Buffers
3. Power Supply Circuit
4. Hardware Layout for Lab 1
5. MPLAB Demo

End of Lab 1