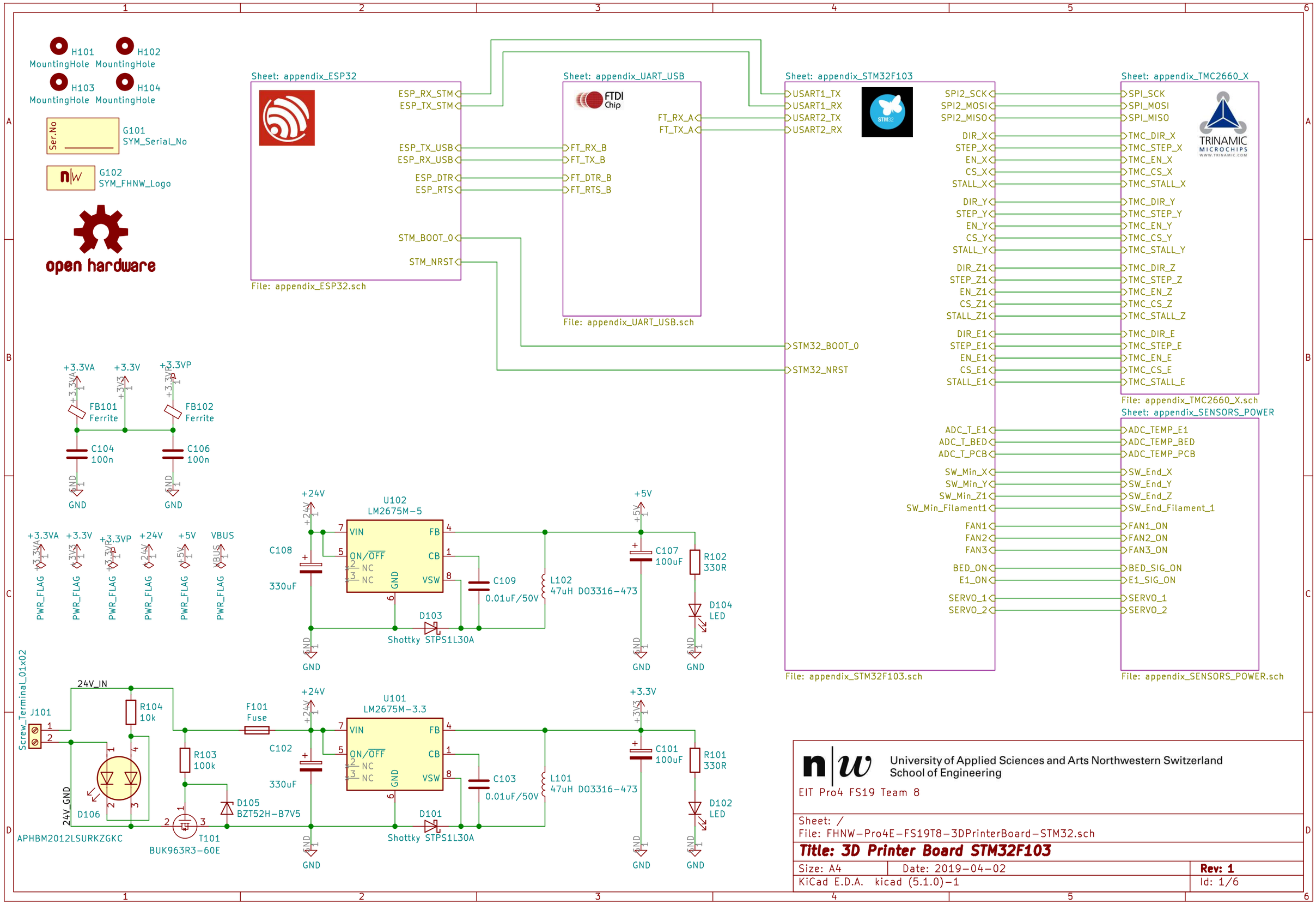
H101 MountingHole
H102 MountingHole
H103 MountingHole
H104 MountingHole
G101 SYM_Serial_No
G102 SYM_FHNW_Logo
open hardware
Sheet: appendix_ESP32
ESP_RX_STM
ESP_TX_STM
ESP_TX_USB
ESP_RX_USB
ESP_DTR
ESP_RTS
STM_BOOT_0
STM_NRST
File: appendix_ESP32.sch
Sheet: appendix_UART_USB
FTDI Chip
FT_RX_A
FT_TX_A
FT_RX_B
FT_TX_B
FT_DTR_B
FT_RTS_B
File: appendix_UART_USB.sch
Sheet: appendix_STM32F103
USART1_TX
USART1_RX
USART2_TX
USART2_RX
STM32_BOOT_0
STM32_NRST
File: appendix_STM32F103.sch
Sheet: appendix_TMC2660_X
TRINAMIC MICROCHIPS
SPI2_SCK
SPI2_MOSI
SPI2_MISO
DIR_X
STEP_X
EN_X
CS_X
STALL_X
DIR_Y
STEP_Y
EN_Y
CS_Y
STALL_Y
DIR_Z1
STEP_Z1
EN_Z1
CS_Z1
STALL_Z1
DIR_E1
STEP_E1
EN_E1
CS_E1
STALL_E1
SPI_SCK
SPI_MOSI
SPI_MISO
TMC_DIR_X
TMC_STEP_X
TMC_EN_X
TMC_CS_X
TMC_STALL_X
TMC_DIR_Y
TMC_STEP_Y
TMC_EN_Y
TMC_CS_Y
TMC_STALL_Y
TMC_DIR_Z
TMC_STEP_Z
TMC_EN_Z
TMC_CS_Z
TMC_STALL_Z
TMC_DIR_E
TMC_STEP_E
TMC_EN_E
TMC_CS_E
TMC_STALL_E
File: appendix_TMC2660_X.sch
Sheet: appendix_SENSORS_POWER
ADC_T_E1
ADC_T_BED
ADC_T_PCB
SW_Min_X
SW_Min_Y
SW_Min_Z1
SW_Min_Filament1
FAN1
FAN2
FAN3
BED_ON
E1_ON
SERVO_1
SERVO_2
ADC_TEMP_E1
ADC_TEMP_BED
ADC_TEMP_PCB
SW_End_X
SW_End_Y
SW_End_Z
SW_End_Filament_1
FAN1_ON
FAN2_ON
FAN3_ON
BED_SIG_ON
E1_SIG_ON
SERVO_1
SERVO_2
File: appendix_SENSORS_POWER.sch
+3.3VA
+3.3V
+3.3VP
FB101 Ferrite
FB102 Ferrite
C104 100n
C106 100n
GND
+24V
+5V
VBUS
PWR_FLAG
U102 LM2675M-5
VIN
ON/OFF
NC
GND
FB
CB
VSW
C108 330uF
C109 0.01uF/50V
L102 47uH DO3316-473
D103 Shottky STPS1L30A
C107 100uF
R102 330R
D104 LED
Screw_Terminal_01x02
J101
24V_IN
R104 10k
R103 100k
F101 Fuse
C102 330uF
D106 APHBM2012LSURKZGKC
D105 BZT52H-B7V5
T101 BUK963R3-60E
24V_GND
U101 LM2675M-3.3
C103 0.01uF/50V
L101 47uH DO3316-473
D101 Shottky STPS1L30A
C101 100uF
R101 330R
D102 LED
University of Applied Sciences and Arts Northwestern Switzerland
School of Engineering
EIT Pro4 FS19 Team 8
Sheet: /
File: FHNW-Pro4E-FS19T8-3DPrinterBoard-STM32.sch
Title: 3D Printer Board STM32F103
Size: A4
Date: 2019-04-02
Rev: 1
KiCad E.D.A. kicad (5.1.0)-1
Id: 1/6

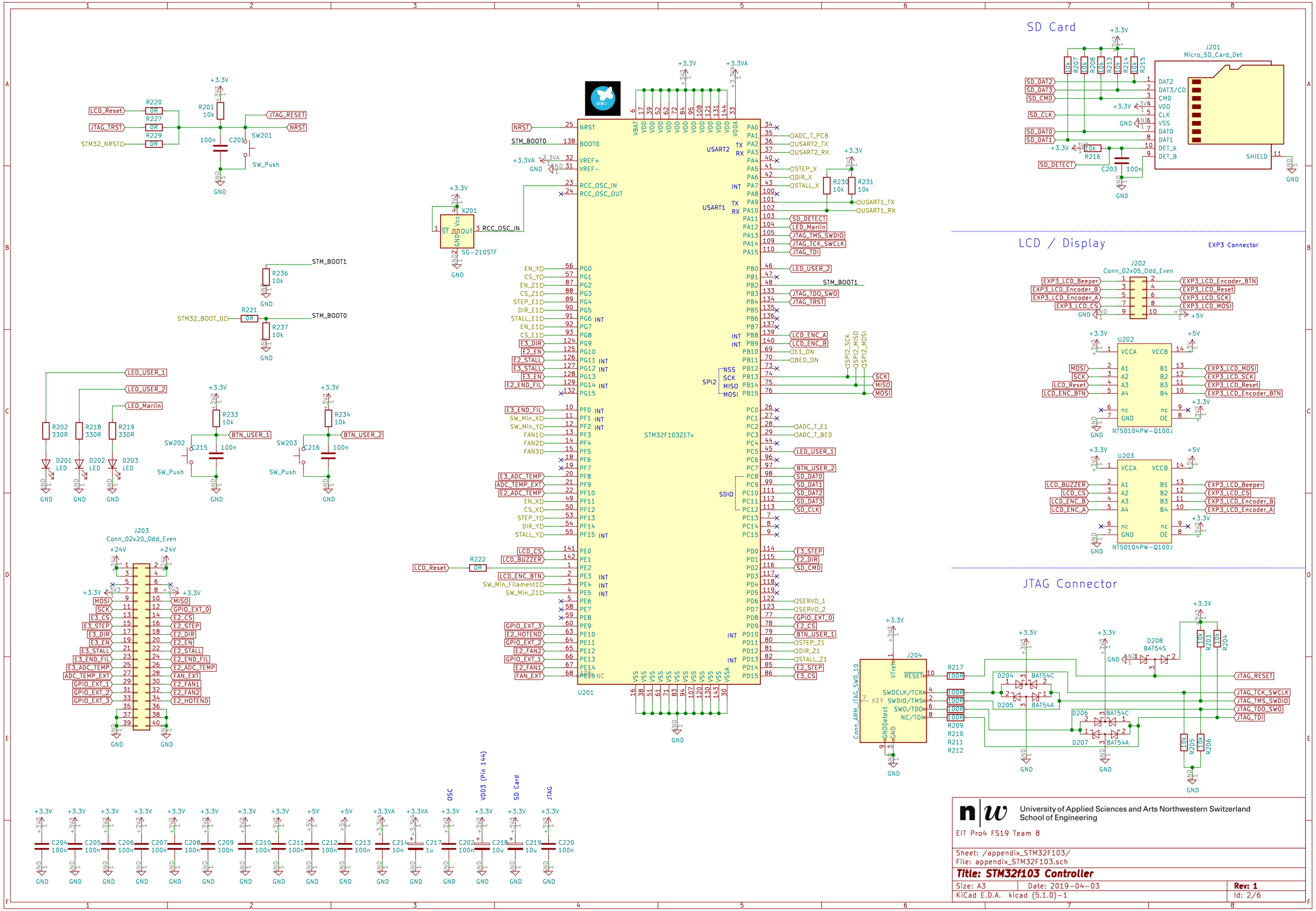
SD Card
J201
Micro_SD_Card_Det
LCD / Display
EXP3 Connector
J202
Conn_02x05_Odd_Even
U202
NTS0104PW-Q100J
U203
NTS0104PW-Q100J
JTAG Connector
J204
Conn_ARM_JTAG_SWD_10
U201
STM32F103ZETx
J203
Conn_02x20_Odd_Even
OSC
VDD3 (Pin 144)
SD Card
JTAG
University of Applied Sciences and Arts Northwestern Switzerland
School of Engineering
EIT Pro4 FS19 Team 8
Sheet: /appendix_STM32F103/
File: appendix_STM32F103.sch
Title: STM32f103 Controller
Size: A3
Date: 2019-04-03
Rev: 1
KiCad E.D.A. kicad (5.1.0)-1
Id: 2/6

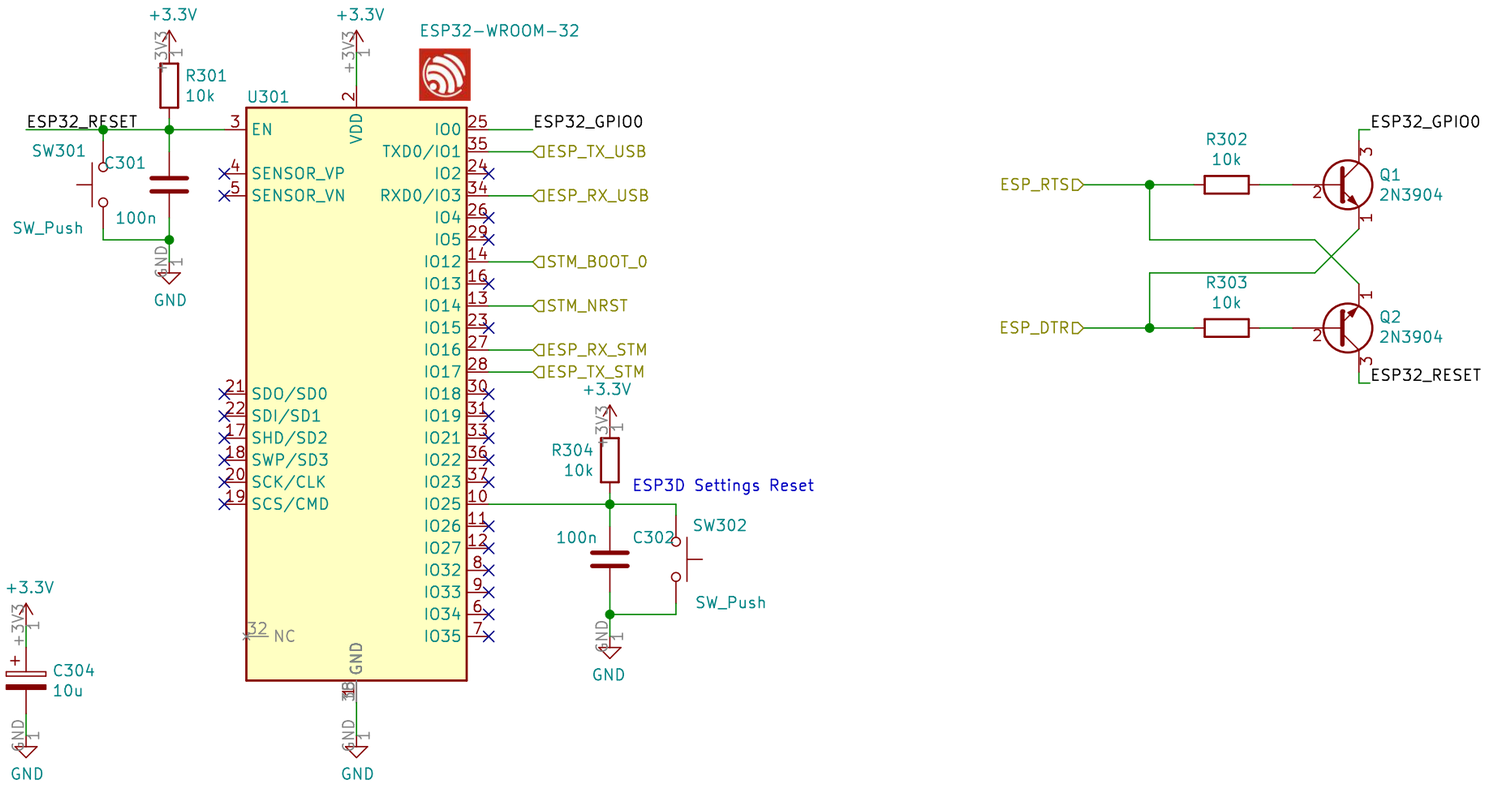

University of Applied Sciences and Arts Northwestern Switzerland
School of Engineering

EIT Pro4 FS19 Team 8

Sheet: /appendix_ESP32/
File: appendix_ESP32.sch

Title:

Size: A4	Date:	**Rev: 1**
KiCad E.D.A. kicad (5.1.0)-1		Id: 3/6

X AXIS

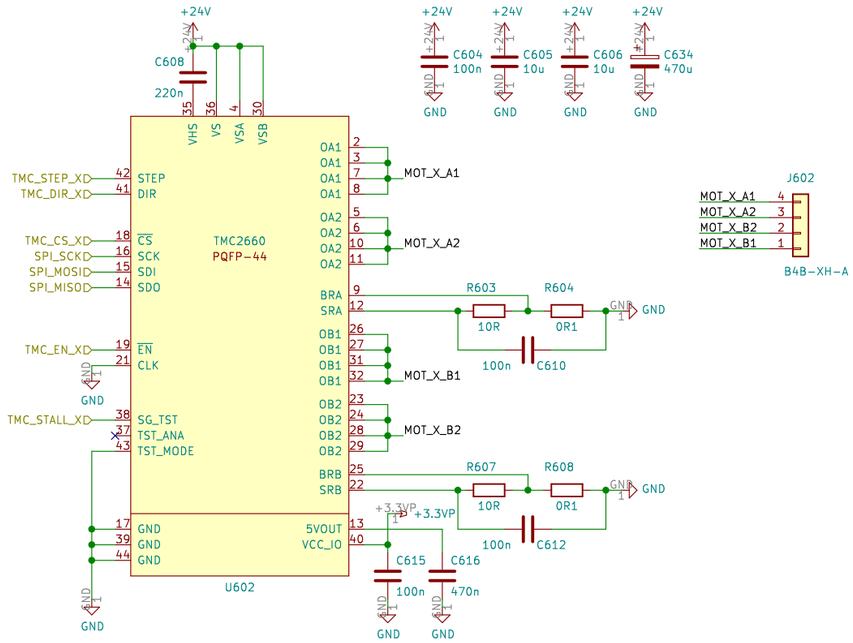

Y AXIS

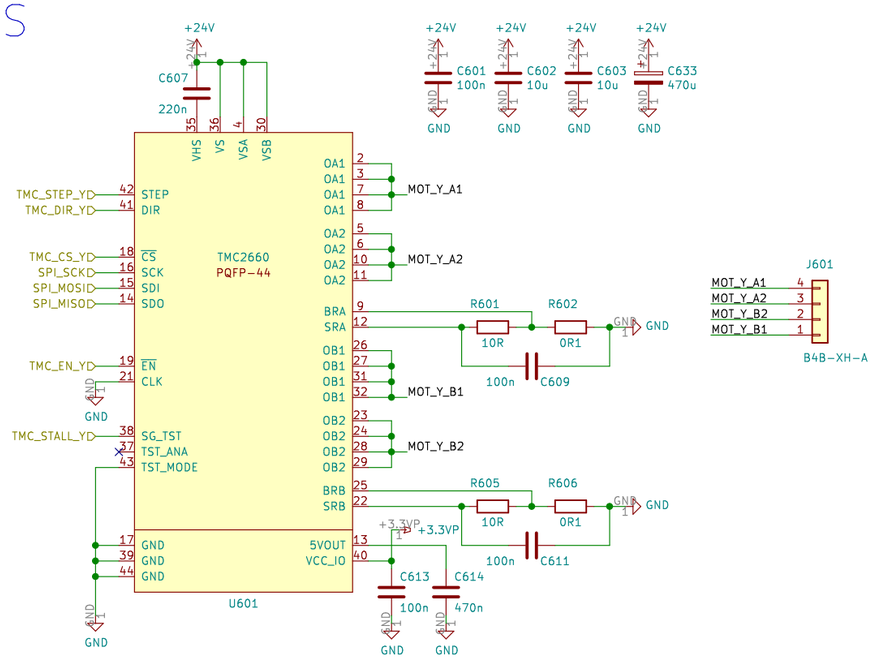

EXTRUDER 1

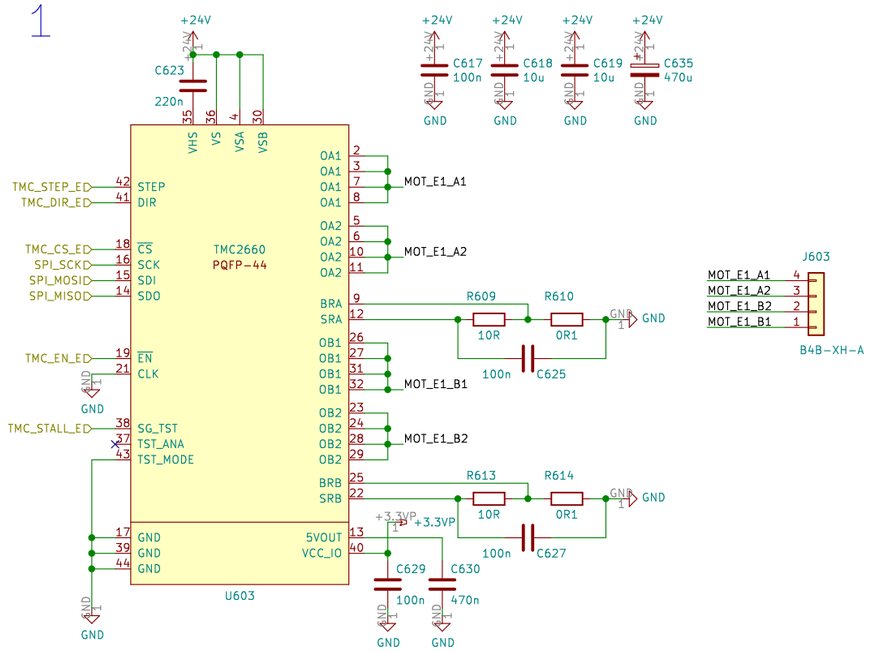

Z AXIS 1

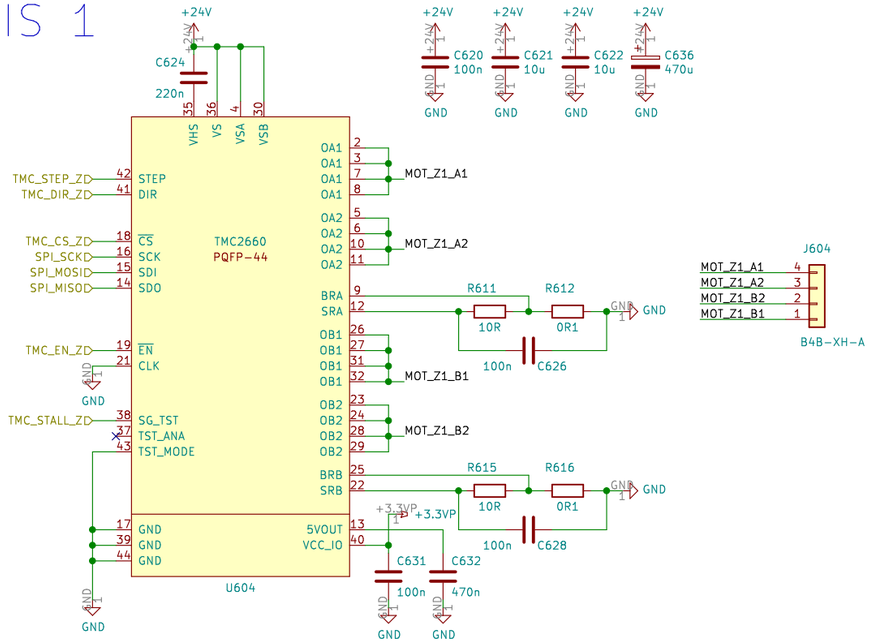

TRINAMIC MICROCHIPS WWW.TRINAMIC.COM

University of Applied Sciences and Arts Northwestern Switzerland
School of Engineering

EIT Pro4 FS19 Team 8

Sheet: /appendix_TMC2660_X/
File: appendix_TMC2660_X.sch

Title: TMC2660 Stepper Drivers

Size: A3	Date:	Rev: 1
KiCad E.D.A. kicad (5.1.0)-1		Id: 4/6

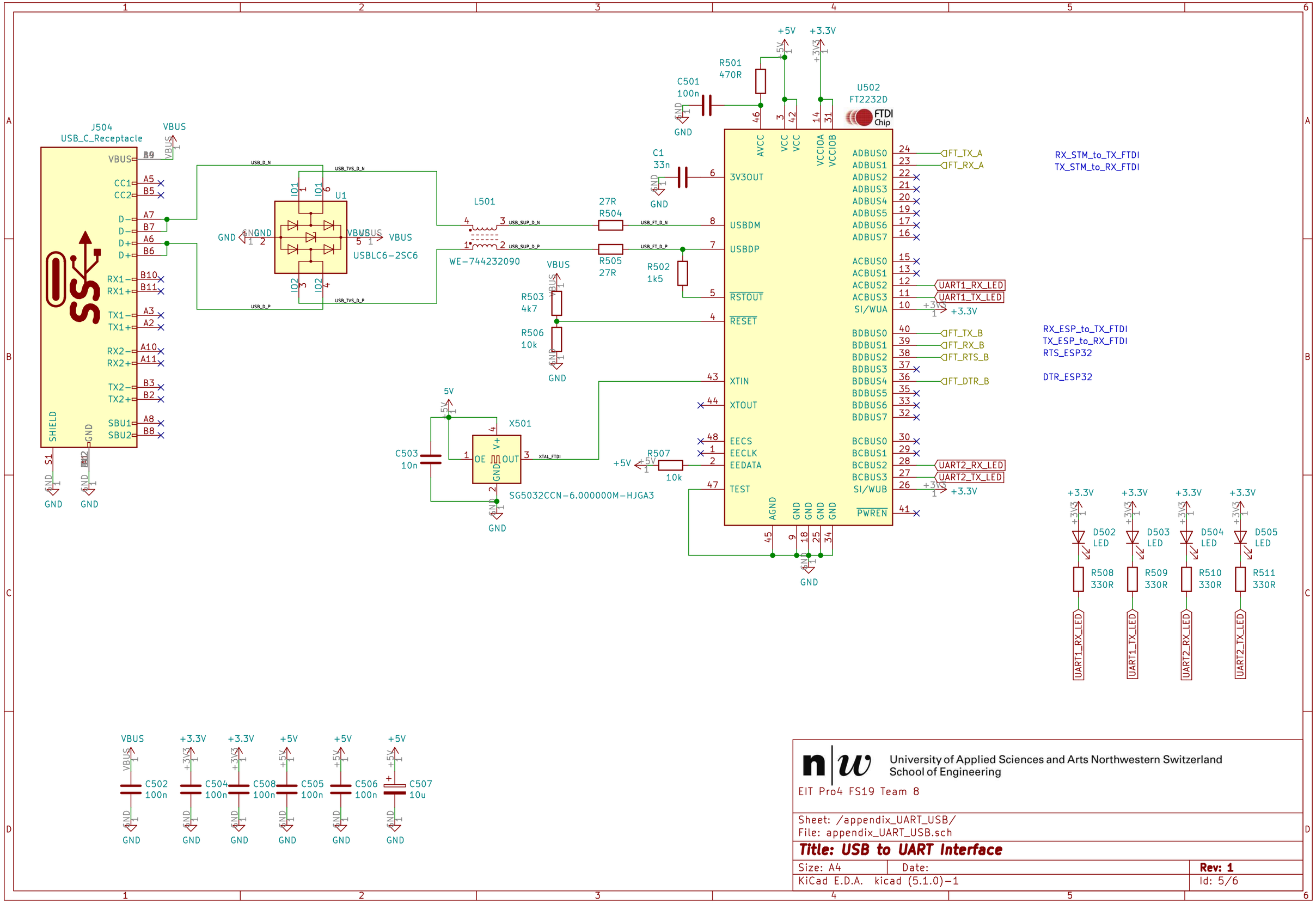

University of Applied Sciences and Arts Northwestern Switzerland
School of Engineering

EIT Pro4 FS19 Team 8

Sheet: /appendix_UART_USB/
File: appendix_UART_USB.sch

Title: USB to UART Interface

Size: A4	Date:	Rev: 1
KiCad E.D.A. kicad (5.1.0)-1		Id: 5/6

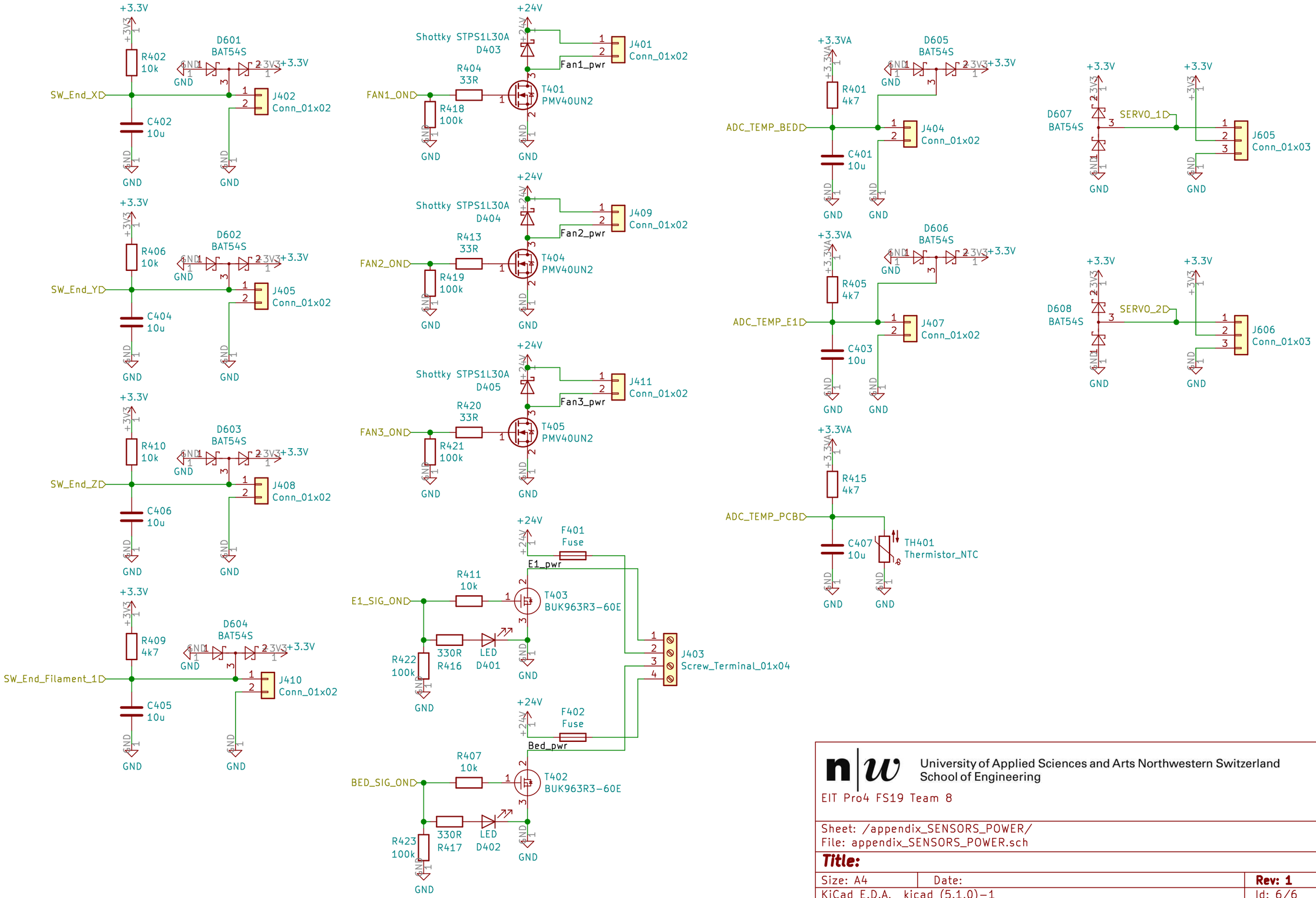

University of Applied Sciences and Arts Northwestern Switzerland
School of Engineering

EIT Pro4 FS19 Team 8

Sheet: /appendix_SENSORS_POWER/
File: appendix_SENSORS_POWER.sch

Title:

Size: A4	Date:	**Rev: 1**
KiCad E.D.A. kicad (5.1.0)-1		Id: 6/6