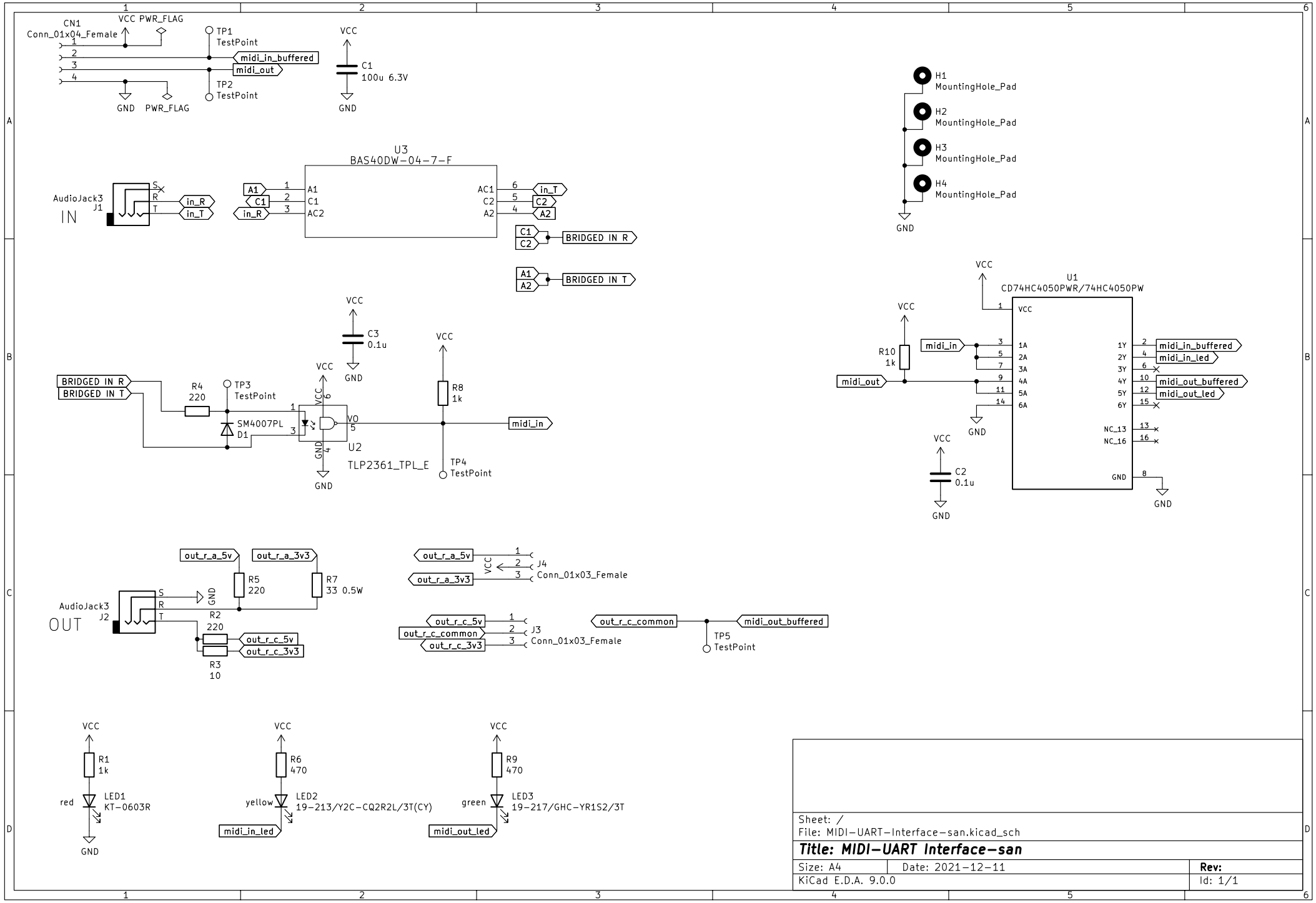

Sheet: /
File: MIDI-UART-Interface-san.kicad_sch

Title: MIDI-UART Interface-san

Size: A4	Date: 2021-12-11	Rev:
KiCad E.D.A. 9.0.0		Id: 1/1