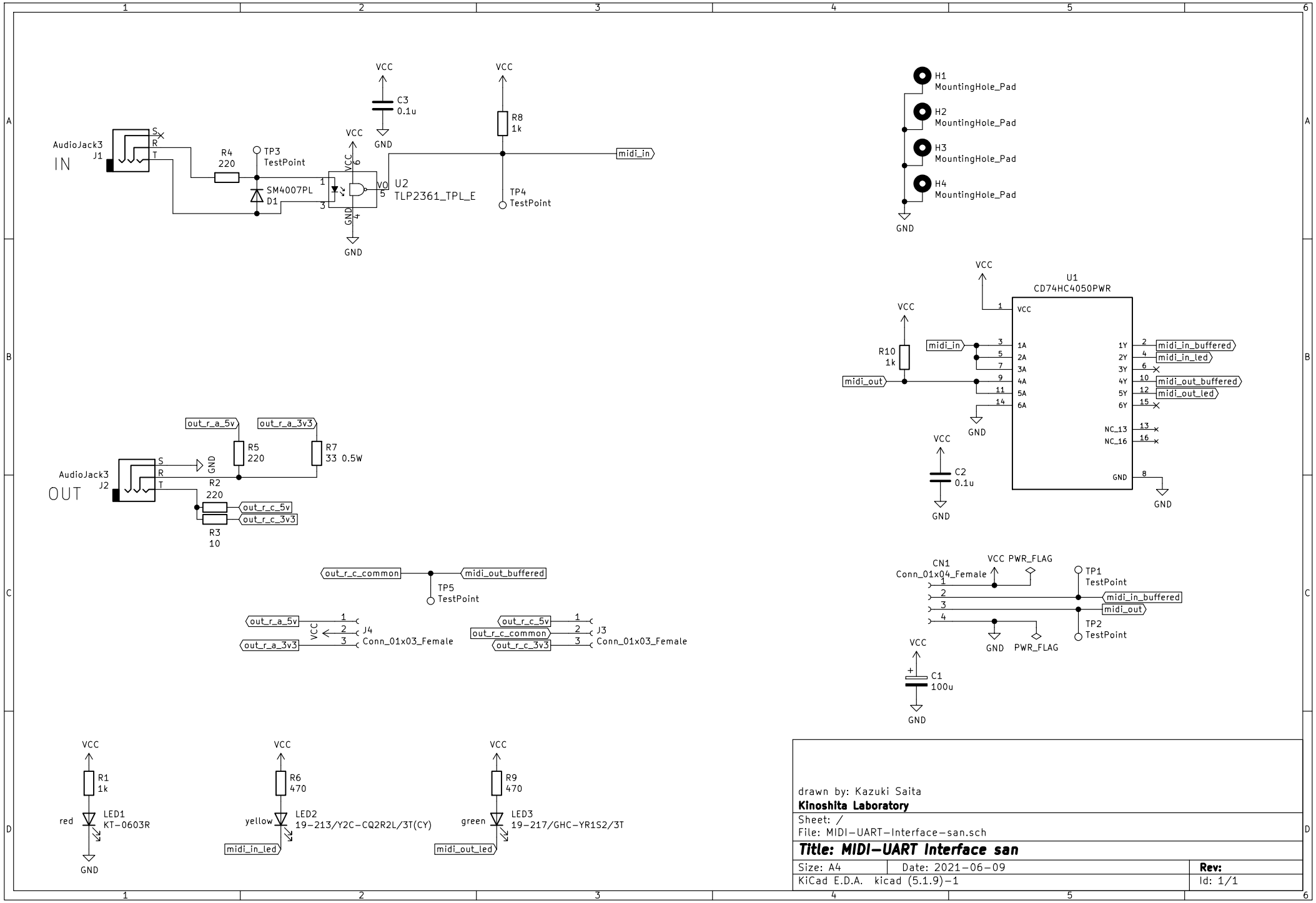

drawn by: Kazuki Saita

Kinoshita Laboratory

Sheet: /

File: MIDI-UART-Interface-san.sch

Title: MIDI-UART Interface san

Size: A4	Date: 2021-06-09	**Rev:**
KiCad E.D.A. kicad (5.1.9)-1		Id: 1/1