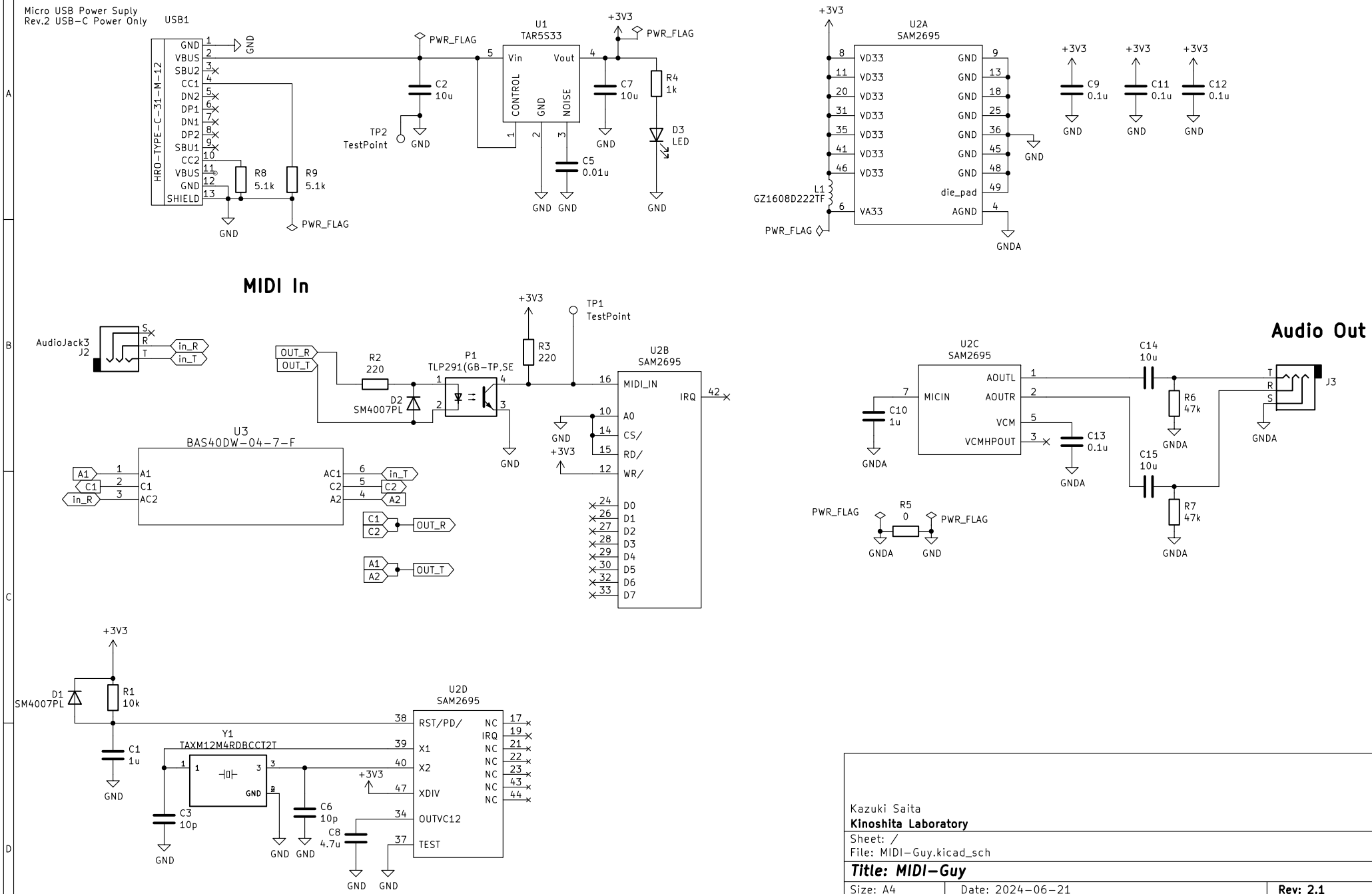
Micro USB Power Suply
Rev.2 USB-C Power Only
USB1
HRO-TYPE-C-31-M-12
GND
VBUS
SBU2
CC1
DN2
DP1
DN1
DP2
SBU1
CC2
VBUS
GND
SHIELD
R8 5.1k
R9 5.1k
PWR_FLAG
C2 10u
TP2 TestPoint
U1 TAR5S33
Vin
Vout
CONTROL
GND
NOISE
C7 10u
C5 0.01u
+3V3
R4 1k
D3 LED
U2A SAM2695
VD33
VA33
die_pad
AGND
L1 GZ1608D222TF
GNDA
C9 0.1u
C11 0.1u
C12 0.1u
MIDI In
AudioJack3 J2
in_R
in_T
OUT_R
OUT_T
R2 220
D2 SM4007PL
P1 TLP291(GB-TP,SE
R3 220
TP1 TestPoint
U2B SAM2695
MIDI_IN
IRQ
A0
CS/
RD/
WR/
D0
D1
D2
D3
D4
D5
D6
D7
U3 BAS40DW-04-7-F
A1
C1
AC2
AC1
C2
A2
Audio Out
U2C SAM2695
MICIN
AOUTL
AOUTR
VCM
VCMHPOUT
C10 1u
C13 0.1u
C14 10u
C15 10u
R6 47k
R7 47k
J3
R5 0
D1 SM4007PL
R1 10k
C1 1u
Y1 TAXM12M4RDBCCT2T
C3 10p
C6 10p
C8 4.7u
U2D SAM2695
RST/PD/
X1
X2
XDIV
OUTVC12
TEST
NC
Kazuki Saita
Kinoshita Laboratory
Sheet: /
File: MIDI-Guy.kicad_sch
Title: MIDI-Guy
Size: A4
Date: 2024-06-21
Rev: 2.1
KiCad E.D.A. 8.0.2
Id: 1/1