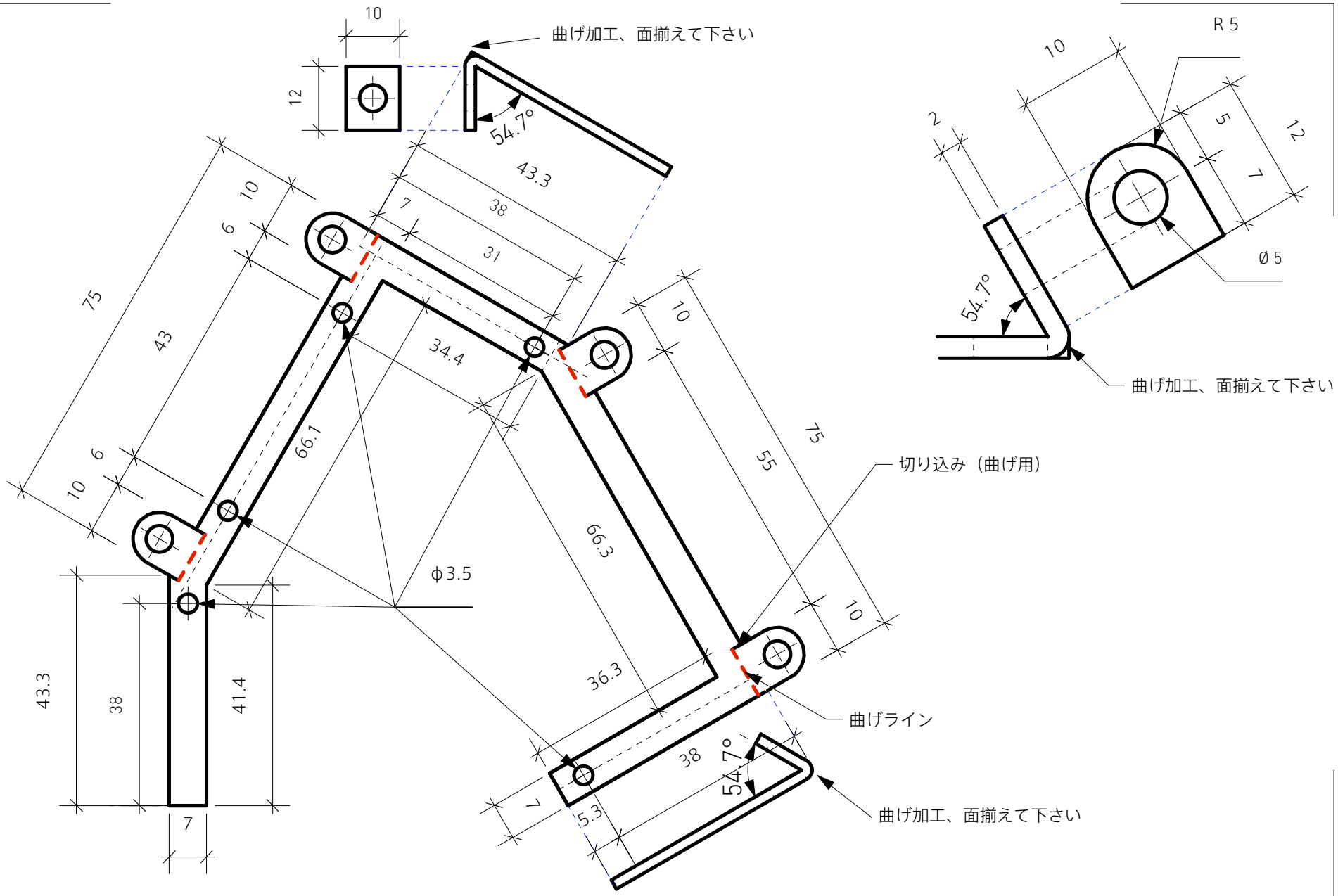

No.	title	amount	place	unit	scale	date	signature
001	moids main frame	1		= mm	1:1	2009.1.30	Soichiro Mihara

Yamaguchi Center for Arts and Media(YCAM) 7-7 Nakazono-cho Yamaguchi-city 7530075 tel: +81-83-901-2222 fax: 81-83-901-2216