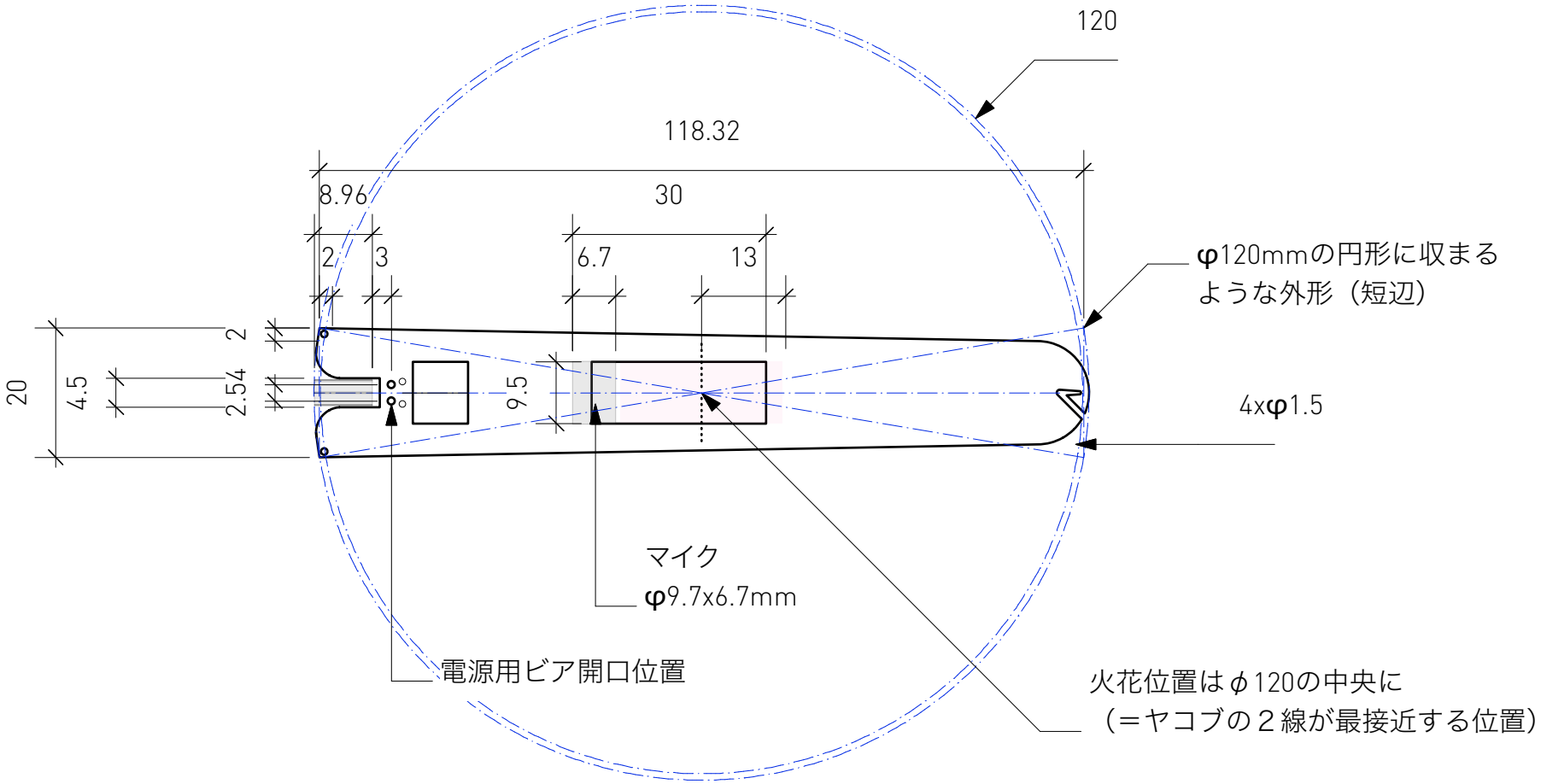

No.	title	amount	place	unit	scale	date	signature
001	moids ver.∞ frame + PCB			= mm	1:1	2018. 6.26	Soichiro Mihara

miharabo / SOICHIRO MIHARA: mhrs@mhrs.jp, +81-90-7287-1359, http://mhrs.jp