JOMO KENYATTA UNIVERSITY OF AGRICULTURE AND TECHNOLOGY

SCHOOL OF ELECTRICAL, ELECTRONIC AND INFORMATION ENGINEERING
DEPARTMENT OF ELECTRONIC AND COMPUTER ENGINEERING

PROJECT PROPOSAL

GROUP 5 MEMBERS

NAME	ADMISSION NUMBER
MUGAISI EUGENE MURULI	ENE212-0083/2020
KIOGORA IAN MWENDA	ENE212-0251/2021
OCHIERE GEORGE JOHN	ENE212-0218/2021
KOECH CINDY CHEBET	ENE212-0069/2020
KIRUI ABIGAEL CHEROTICH	ENE212-0070/2020

COURSE: B.Sc. ELECTRONIC AND COMPUTER ENGINEERING
EEE 2412
MICROPROCESSORS II

TITLE: AUTOMATIC VERTICAL LIFT BRIDGE CONTROL SYSTEM

DATE: April 2026

1. EXECUTIVE SUMMARY

This proposal presents the Automatic Vertical Lift Bridge Control System as Group 5's project for the Microprocessors II unit (EEE 2412). The system automates the complete operation of a scale-model vertical lift bridge: it detects approaching vessels using directional ultrasonic sensors, stops road traffic with sequenced traffic lights and servo-actuated barriers, raises the bridge deck vertically between four tower structures in mechanically synchronised motion, allows vessel transit through the cleared waterway, then lowers the deck and restores normal road traffic flow—all without human intervention.

The bridge mechanism employs a single JGA25-370 geared DC motor whose torque is mechanically distributed to four T8 trapezoidal lead screws—one per tower—via a network of a closed-loop GT2 timing belt and four GT2 pulleys. The belt runs at tower-top level, high above the waterway, ensuring zero obstruction to vessel transit. Because the four screws are rigidly coupled through this mechanical linkage, they turn at exactly the same rate without any electronic synchronisation. The self-locking property of the trapezoidal thread profile means the deck holds its position if power is lost, providing inherent safety without counterweights or braking systems.

Directional vessel detection uses a dual-beam ultrasonic sensor arrangement at each end of the waterway. Two HC-SR04 sensors are mounted 30 mm apart on a common bracket at each station. By analysing which beam breaks first, the firmware determines the vessel's heading, enabling the system to raise the bridge only for approaching vessels. This design correctly handles simultaneous bidirectional vessel traffic.

The entire control electronics—ESP32-WROOM-32 microcontroller, DRV8871 H-bridge motor driver, 74HC595 LED shift register, CP2102N USB-UART bridge, LM2596 buck converter, AMS1117 LDO regulator, safety relay with MOSFET gate driver, and all sensor interface circuits—are integrated onto a single custom-designed Printed Circuit Board (PCB), fabricated by JLCPCB to professional standards. The ESP32 runs FreeRTOS with seven priority-scheduled tasks across dual CPU cores for real-time motor control, sensor polling, traffic management, safety monitoring, and Human Machine Interface (HMI) display on a 2.8-inch ILI9341 TFT screen. An operator panel with pushbuttons and an emergency stop provides local control authority.

The total estimated component cost is approximately KES 17,300, shared across five team members at approximately KES 3,460 per person.

2. PROBLEM STATEMENT

Movable bridges are critical infrastructure elements at waterway crossings, enabling both road traffic and vessel navigation to share the same corridor. In Kenya and across the developing world, many such crossings are operated manually by an attendant who must be physically present to observe vessel approach, halt road traffic, and operate the bridge mechanism. This manual operation introduces three categories of recurring problems:

• **i. Safety risk from human error.** A delayed response by the attendant can result in vehicles being stranded on a raising bridge deck, or a vessel colliding with a bridge that was not raised in time. Manual systems have no interlock to verify that the deck is clear of vehicles before raising, or that traffic barriers are fully lowered before the deck moves.

• **ii. Synchronisation failure in multi-point lift systems.** Vertical lift bridges require multiple lift points to move in precise synchronisation. Manual or poorly controlled systems risk deck tilting, guide rail binding, and structural stress when lift points move at different rates. A height discrepancy of as little as 15 mm across a model-scale deck is sufficient to cause visible tilting and mechanical jamming.

• **iii. Inability to determine vessel intent.** Conventional single-sensor detection systems cannot distinguish between a vessel approaching the bridge (which requires a raise) and a vessel departing the area (which requires no action). This leads to unnecessary bridge raises that disrupt road traffic without cause, and cannot handle simultaneous bidirectional vessel traffic.

This project solves all three problems through full automation: a mechanically-locked four-point lift system that physically cannot desynchronise, a dual-beam directional sensor array that determines vessel heading at each end of the waterway independently, and a comprehensive interlock chain that verifies every safety condition before permitting deck movement.

3. SYSTEM OVERVIEW

The system is centred on an ESP32-WROOM-32 microcontroller that reads sensors, executes a finite state machine (FSM), drives actuators, enforces safety interlocks, and presents system status on a TFT display. The physical bridge is a scale model built on a 900 mm × 600 mm plywood base platform with a 150 mm-wide waterway channel, four tower structures (each 300 mm tall), and a 200 mm × 120 mm bridge deck that travels 180 mm vertically between the fully-lowered and fully-raised positions.

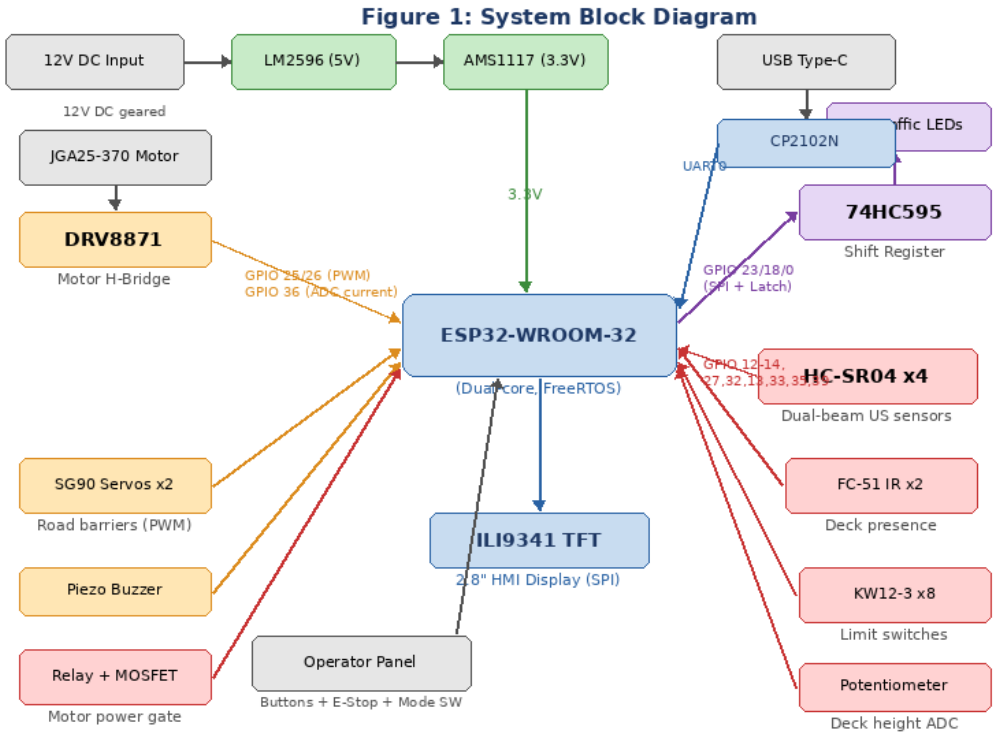

Figure 1: System block diagram showing all components and their connections to the ESP32

3.1 Vertical Lift Mechanism

Unlike a bascule (drawbridge) design where leaves pivot upward on hinges, a vertical lift bridge raises the entire deck horizontally between tower structures. The deck remains perfectly level throughout its travel. This design was selected for its mechanical precision, inherent stability, and the elimination of complex linkage geometry.

Drive system: A single JGA25-370 DC geared motor (12 V, 60 RPM, 1.2 kg·cm torque) is mounted at the base of Tower A-Left. The motor shaft couples directly to a T8 trapezoidal lead screw (2 mm pitch, 4-start giving 8 mm linear travel per revolution) that runs vertically through the tower. At the tower top, a GT2 20-tooth pulley at the top of the screw shaft engages a GT2 6 mm timing belt. This belt forms a closed rectangular loop connecting pulleys at the tops of all four towers, synchronising all lead screws to identical rotation's lead screw.

Torque distribution to all towers: The GT2 timing belt forms a closed rectangular loop at tower-top level, approximately 380 mm above the base platform and well above maximum vessel clearance height. The belt path runs from the Tower A-Left pulley along Bank A to Tower A-Right, then crosses the waterway to Tower B-Right, runs along Bank B to Tower B-Left, and crosses back to Tower A-Left. The belt crosses the waterway twice but only at the very top of the towers, leaving the entire channel clear below. Each of the four pulleys drives its tower's lead screw, so one motor rotation translates to identical screw rotation at all four lift points.

Mechanical synchronisation: Because all four lead screws are rigidly coupled through the timing belt and pulley network, they are physically constrained to turn at exactly the same angular velocity. This is a fundamental mechanical property of synchronous belt coupling—it is not dependent on software, sensors, or feedback loops. The deck rides on four threaded brass nut blocks (one per screw) with guide blocks at all four corners sliding on vertical aluminium guide rails to prevent any tilting, rocking, or rotation.

Self-locking safety: The trapezoidal thread profile of the T8 screw has a helix angle smaller than the friction angle of the brass-on-steel interface. This means the screw is non-backdrivable: the load (deck weight) cannot cause the screw to rotate in reverse. If power is lost or the motor is de-energised for any reason, the deck holds its position indefinitely without any additional braking mechanism. This eliminates the need for counterweights, electromagnetic brakes, or mechanical catches.

Speed and travel: At 60 RPM with an 8 mm lead, the deck moves at 8 mm/s. A full 180 mm raise takes approximately 22.5 seconds, which is appropriate for a scale-model demonstration. The motor produces approximately 0.12 N·m of torque, while the deck (approximately 250 g fully loaded) requires only 0.008 N·m through the screw mechanism—a safety factor of 15×.

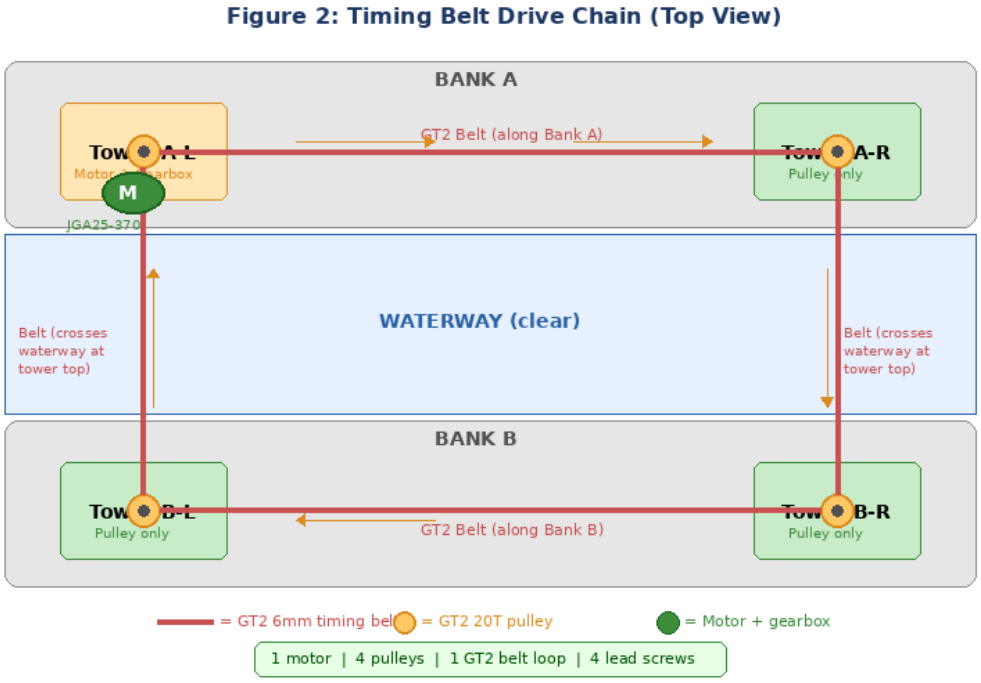

Figure 2: GT2 timing belt drive chain — single motor drives all four screws via a belt loop at tower-top level

3.2 Directional Vessel Detection

A fundamental requirement for an automated bridge is the ability to determine whether a detected vessel requires the bridge to be raised. A vessel approaching the bridge needs passage; a vessel departing does not. Conventional single-sensor systems cannot make

this distinction. The SBPCS solves this using a dual-beam sensor station at each end of the waterway.

Sensor station layout: Each station consists of two HC-SR04 ultrasonic distance sensors mounted 30 mm apart along the waterway axis on a common rigid bracket, with both sensors aimed across the channel perpendicular to the waterway flow. The two sensors are designated Beam A (the outer beam, closer to open water) and Beam B (the inner beam, closer to the bridge). The two stations are designated Upstream (on the approach side) and Downstream (on the departure side).

Direction determination: When a vessel passes through a sensor station, it breaks Beam A and Beam B in sequence. The time difference between the two beam-break events, combined with which beam breaks first, determines the vessel's direction of travel:

• **i. Approaching vessel (upstream station):** Beam A triggers before Beam B. This sequence indicates the vessel is moving from open water toward the bridge. The firmware posts an EVT_VESSEL_DETECTED event to the FSM event queue, initiating the bridge raise cycle.

• **ii. Departing vessel (upstream station):** Beam B triggers before Beam A. This reversed sequence indicates the vessel is moving away from the bridge. The firmware discards this event—no bridge raise is required.

• **iii. Bidirectional simultaneous transit:** Each sensor station determines direction independently. If a vessel approaches from upstream while another departs downstream, the upstream station correctly detects the approach (Beam A then B) and the downstream station independently detects the departure (Beam B then A at that station). The two stations operate asynchronously. The downstream station's detection of a vessel passing through (in any direction) generates the EVT_VESSEL_PASSED event that signals the FSM to begin the bridge lowering sequence.

• **iv. Simultaneous beam triggering:** If both beams at a single station trigger within less than 50 ms of each other, the firmware classifies this as sensor noise, wave splash, or a non-vessel obstruction (e.g., floating debris) and discards the event. A genuine vessel at any plausible speed in a model waterway takes at least 100 ms to traverse the 30 mm beam spacing, so this rejection threshold has a 2× safety margin.

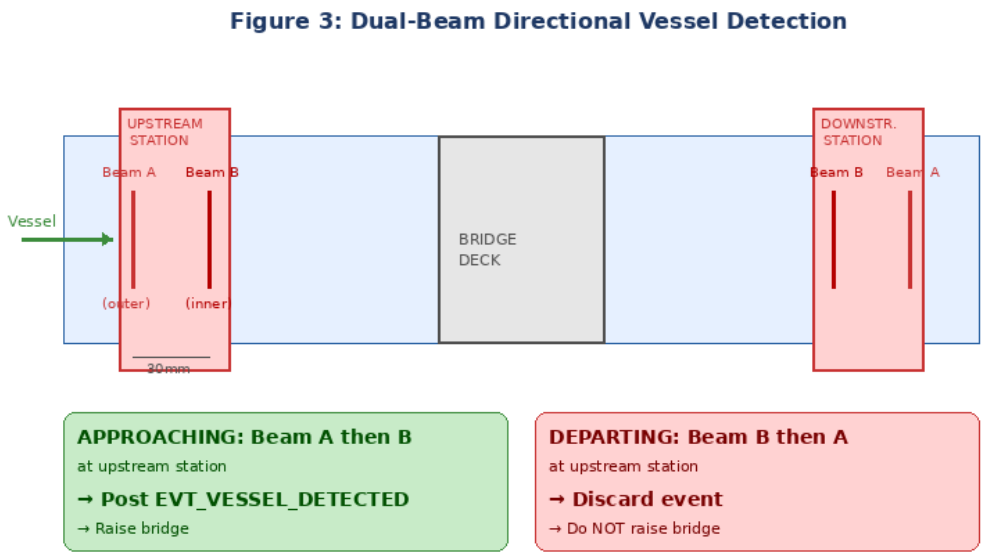

Figure 3: Dual-beam directional vessel detection — beam sequence determines vessel heading

3.3 Operating Modes

Mode	Trigger	System Behaviour
AUTO	Default on boot	Bridge controlled automatically by vessel detection, with full safety interlock verification before each raise/lower cycle.
MANUAL	Toggle switch on operator panel	Operator directly commands Raise, Lower, or Stop via dedicated pushbuttons. All safety interlocks remain enforced.
EMERGENCY STOP	E-stop button pressed	All motors immediately de-energised via hardware relay path independent of microcontroller. System latched until E-stop released and Reset pressed.
FAULT	Fault detected by safety watchdog	Motors stopped. Fault code and description displayed on TFT. Latched until fault condition clears and operator presses Reset.

4. DETAILED COMPONENT DESCRIPTION

This section describes every major component in the system, explaining what it does, how it works at a fundamental level, and how it is electrically connected to the rest of the system.

4.1 ESP32-WROOM-32 Microcontroller

What it is: The ESP32-WROOM-32 is a dual-core 32-bit Xtensa LX6 microcontroller module manufactured by Espressif Systems. It integrates WiFi and Bluetooth radios (not used in this project), 520 KB of SRAM, 4 MB of flash memory, 34 programmable GPIO pins, two 12-bit ADC units, four SPI interfaces, two I²C interfaces, two UART

interfaces, and 16 PWM channels via the LEDC peripheral. It operates at 240 MHz and supports FreeRTOS for concurrent multitasking.

What it does in this system: The ESP32 is the central control unit. It runs seven FreeRTOS tasks that collectively: read all sensors (ultrasonic, IR, limit switches, potentiometer, current sense), execute the finite state machine that governs bridge operation, generate PWM signals to control motor speed, drive the shift register for traffic LEDs, control servo barrier positions, monitor safety conditions, and render the HMI display on the TFT screen.

How it connects: The ESP32 module is soldered directly to the custom PCB. Its 3V3 power pin connects to the 3.3 V rail provided by the AMS1117 LDO, with a 100 nF ceramic decoupling capacitor placed within 5 mm of the pin. All ground pins connect to the PCB ground plane. The EN (enable) pin is pulled high to 3.3 V through a 10 kΩ resistor with a 100 nF RC delay capacitor to ground for clean power-on reset. GPIO 0 has a 10 kΩ pull-up to 3.3 V (must be HIGH at boot for normal operation). GPIO 2 has a 10 kΩ pull-down (must be LOW at boot). GPIO 12 has a 10 kΩ pull-down (MTDI strapping pin, must be LOW for 3.3 V flash). GPIO 15 has a 10 kΩ pull-up (MTDO strapping pin). The antenna end of the module overhangs the PCB edge with a 7 mm copper-free keepout zone to avoid detuning the antenna.

4.2 DRV8871 Motor Driver IC

What it is: The DRV8871 is a brushed DC motor driver IC manufactured by Texas Instruments. It contains a full H-bridge capable of driving motors up to 3.6 A peak current at up to 45 V. It requires only two control inputs (IN1 and IN2) and provides a current-sense output (VPROPI).

What it does: It converts the ESP32's low-power GPIO signals into high-current drive signals for the JGA25-370 motor. By applying PWM to IN1 with IN2 held LOW, the motor rotates in one direction (raising the deck). Reversing the signals (PWM on IN2, IN1 LOW) reverses the motor (lowering the deck). Setting both LOW allows the motor to coast. The VPROPI pin outputs a voltage proportional to the motor current ($V = I \times R_sense$), enabling the ESP32 to monitor current for overcurrent and stall detection.

How it connects: The DRV8871 VM (motor voltage) pin connects to the 12 V motor power rail after the safety relay K1. A 100 nF ceramic decoupling capacitor is placed across VM to GND as close to the pin as possible. IN1 connects to ESP32 GPIO 25, IN2 to GPIO 26—both configured as LEDC PWM outputs at 20 kHz with 8-bit resolution (0–255 duty cycle). OUT1 and OUT2 connect to a 2-pin screw terminal (J3) for the motor wires. VPROPI connects through a 1 Ω sense resistor to GND, with the junction fed to ESP32 GPIO 36 (ADC1_CH0). The ILIMIT pin connects through a 10 kΩ resistor to GND, setting the hardware current limit to approximately 1 A. The

exposed thermal pad on the underside of the IC connects to the ground plane through four 0.3 mm thermal vias—this is critical for heat dissipation.

4.3 74HC595 Shift Register

What it is: The 74HC595 is an 8-bit serial-in, parallel-out shift register with a storage register and tri-state outputs. Data is shifted in one bit at a time on the rising edge of the shift clock (SRCLK), then all eight outputs update simultaneously when the storage clock (RCLK) is pulsed.

What it does: It drives eight traffic signal LEDs using only three ESP32 GPIO pins instead of eight. The eight outputs map to: QA = Road A Red, QB = Road A Yellow, QC = Road A Green, QD = Road B Red, QE = Road B Yellow, QF = Road B Green, QG = Marine Red, QH = Marine Green.

How it connects: VCC (pin 16) connects to 3.3 V with a 100 nF decoupling capacitor. GND (pin 8) connects to ground. SER/DS (pin 14, serial data input) connects to ESP32 GPIO 23. SRCLK/SHCP (pin 11, shift clock) connects to GPIO 18. RCLK/STCP (pin 12, latch clock) connects to GPIO 0. OE (pin 13, output enable, active LOW) is tied to GND so outputs are always enabled. SRCLR (pin 10, shift register clear, active LOW) is tied to VCC so the register is never cleared. Each of the eight outputs connects through a current-limiting resistor to an LED and then to GND. Resistor values are chosen for approximately 15 mA at 3.3 V: 68 Ω for red LEDs ($V_f \approx 2.0$ V), 56 Ω for yellow LEDs ($V_f \approx 2.1$ V), and 47 Ω for green LEDs ($V_f \approx 2.2$ V). GPIO 23 and GPIO 18 are shared with the TFT display SPI bus; the 74HC595 uses a separate latch pin so there is no bus contention.

4.4 Power Supply System

12 V input: System power enters through a 5.5 mm × 2.1 mm barrel jack connector from a 12 V / 3 A DC wall adapter. An SS34 Schottky diode in series provides reverse polarity protection. A 100 µF/25 V electrolytic capacitor and a 100 nF ceramic capacitor across the 12 V rail provide bulk energy storage and high-frequency decoupling.

LM2596-5.0 buck converter (12 V → 5 V): The LM2596-5.0 is a fixed-output 5 V DC-DC step-down switching regulator capable of delivering 3 A. It operates by rapidly switching the input voltage on and off through an inductor (L1, 330 µH) and smoothing the output with a capacitor (C3, 220 µF/16 V). A 1N5824 Schottky diode (D1) provides the freewheeling current path when the internal switch is off. The feedback pin connects directly to the output for the fixed-5.0 version. A green LED with a 1 kΩ series resistor indicates that the 5 V rail is live. The 5 V rail powers: the servo motors, the HC-SR04 ultrasonic sensors, the relay coil, the buzzer, and feeds the AMS1117 LDO.

AMS1117-3.3 LDO regulator (5 V → 3.3 V): The AMS1117-3.3 is a fixed-output 3.3 V linear dropout regulator providing up to 800 mA. A 10 µF tantalum capacitor is

placed on both the input and output pins within 5 mm for stability. The 3.3 V rail powers: the ESP32 module (peak ≈ 240 mA during WiFi TX, though WiFi is unused here, typical ≈ 80 mA), the 74HC595 shift register, the FC-51 IR sensors, and the potentiometer reference voltage.

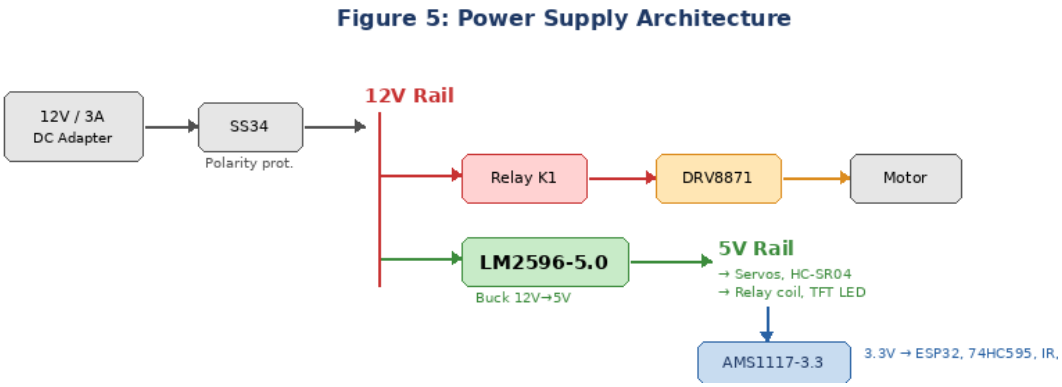

Figure 5: Power supply architecture — 12 V input stepped down to 5 V and 3.3 V rails

4.5 CP2102N USB-to-UART Bridge

What it is: The CP2102N is a USB-to-UART bridge IC by Silicon Labs that enables programming and debugging the ESP32 via a USB connection to a PC. It appears as a virtual COM port on the host computer.

How it connects: The USB Type-C connector's D+ and D− lines connect to the CP2102N through 22 Ω series resistors. Two 5.1 kΩ resistors from CC1 and CC2 to GND identify the device as a USB sink (UFP). The CP2102N's TXD pin connects to ESP32 GPIO 3 (RXD0) and RXD connects to GPIO 1 (TXD0). An auto-reset circuit using two 2N3904 NPN transistors allows the programming tool to automatically reset the ESP32 into download mode: DTR through a 100 nF capacitor drives Q1's base (collector to GPIO 0), and RTS through a 100 nF capacitor drives Q2's base (collector to EN).

4.6 HC-SR04 Ultrasonic Distance Sensors (×4)

What it is: The HC-SR04 is an ultrasonic ranging module that measures distance by emitting a 40 kHz ultrasonic pulse and timing how long it takes for the echo to return. It operates at 5 V and has four pins: VCC, GND, TRIG (trigger input), and ECHO (echo output). The ECHO pin outputs a 5 V pulse whose width in microseconds equals the round-trip time; distance in centimetres = pulse_width × 0.0343 / 2.

What they do: Four HC-SR04 sensors form two dual-beam stations (upstream and downstream). Each station detects vessels crossing the waterway and determines their direction of travel using the beam-sequence method described in Section 3.2.

How they connect: Each sensor's VCC connects to the 5 V rail and GND to ground. Each TRIG pin connects directly to an ESP32 GPIO output (the ESP32 outputs 3.3 V,

which exceeds the HC-SR04's minimum HIGH threshold of 2.0 V). Each ECHO pin connects through an on-PCB voltage divider (1 kΩ series + 2 kΩ to GND) to an ESP32 GPIO input, reducing the 5 V ECHO signal to 5 × 2/(1+2) = 3.33 V, which is safe for the ESP32's 3.3 V-tolerant inputs. The four sensors use GPIO 12/14 (upstream beam A), GPIO 27/32 (upstream beam B), GPIO 13/33 (downstream beam A), and GPIO 35/39 (downstream beam B) for their TRIG/ECHO pairs respectively. Each sensor connects to the PCB via a JST-XH 4-pin header (VCC, GND, TRIG, ECHO).

4.7 FC-51 IR Obstacle Sensors (×2)

What it is: The FC-51 is an infrared proximity sensor module that detects objects within a configurable range (typically 2–30 cm, adjustable via onboard potentiometer). It contains an IR LED transmitter and a photodiode receiver. When an obstacle reflects the IR beam back to the receiver, the module's output pin goes LOW (active LOW logic).

What they do: Two FC-51 sensors are mounted at deck level, one on each side of the bridge deck. They detect whether any vehicles or objects are present on the deck surface. The bridge will not begin raising until both sensors report clear (output HIGH) for a sustained 2-second window, preventing vehicles from being stranded on a raising deck.

How they connect: VCC connects to 3.3 V, GND to ground, and OUT to ESP32 GPIO 21 (sensor A) and GPIO 22 (sensor B) configured with internal pull-up resistors. Each sensor connects via a JST-XH 3-pin header.

4.8 KW12-3 Microswitches — Limit Switches (×8)

What they do: Eight microswitches provide hardware end-of-travel protection—one at the top and one at the bottom of each tower's screw travel. When the deck reaches a limit position, the nut block physically presses the switch lever. The normally-open (NO) contact closes, pulling the corresponding GPIO pin LOW through the switch. The firmware detects this via interrupt and immediately commands the motor to stop, preventing mechanical damage from overtravel.

How they connect: Each switch's COM terminal connects to GND and NO terminal connects to an ESP32 GPIO pin configured with an internal pull-up resistor. When the switch is not pressed, the GPIO reads HIGH (pulled up internally). When pressed, the GPIO reads LOW (connected to GND through the closed switch). GPIO assignments: Tower A-L bottom = GPIO 16, A-L top = GPIO 17, A-R bottom = GPIO 5, A-R top = GPIO 19, and the remaining four for Towers B-L and B-R.

4.9 SG90 Micro Servos (×2)

What they do: Two SG90 servos actuate the road barriers at the approach roads to the bridge. Each servo rotates a barrier arm between 0° (barrier raised, road open) and 90° (barrier lowered, road blocked). The servo position is set by a PWM signal: a 50 Hz signal with a pulse width between 500 µs (0°) and 2400 µs (180°).

How they connect: Each servo has three wires: red (VCC, 5 V rail), brown (GND), and orange (signal). The signal wire connects to ESP32 GPIO 4 (Servo A) and GPIO 15 (Servo B). Each servo connects to the PCB via a JST-XH 3-pin header.

4.10 2.8-inch ILI9341 TFT Display

What it does: The ILI9341 is a 240×320 pixel colour TFT LCD driven over a 4-wire SPI interface at up to 40 MHz. It provides the primary Human Machine Interface visualisation, displaying: the current system state (e.g., IDLE, BRIDGE_RAISING, FAULT), a bar gauge showing deck height in millimetres, motor current reading, sensor status indicators (upstream/downstream/IR), active fault codes with descriptions, and the current operating mode (AUTO/MANUAL).

How it connects: VCC to 3.3 V, GND to ground. MOSI (data) to GPIO 23 (shared SPI bus with 74HC595), SCLK (clock) to GPIO 18 (shared), CS (chip select) to GPIO 15, DC (data/command select) to GPIO 2, RST (hardware reset) to GPIO 4, LED (backlight) to 5 V. The TFT_eSPI library handles CS assertion internally during SPI transactions. A mutex in the firmware prevents simultaneous SPI access between the display task and the shift register output task.

4.11 Safety Relay Circuit

What it does: The SRD-05VDC-SL-C relay acts as a power gate between the 12 V supply and the motor driver's VM pin. When the relay is energised (coil powered), the normally-open contact closes and 12 V reaches the DRV8871. When de-energised, the contact opens and motor power is physically cut at the hardware level.

How it connects: The relay coil positive terminal connects to the 5 V rail. The coil negative terminal connects to the drain of a 2N7000 N-channel MOSFET. The MOSFET source connects to GND. The MOSFET gate connects through a 1 kΩ resistor to a junction point that is fed by both the ESP32 GPIO 33 (relay control output) and the E-stop button's normally-closed contact. A 10 kΩ pull-down resistor on the gate ensures the MOSFET defaults to OFF if the GPIO is floating. A 1N4148 flyback diode across the relay coil (cathode to positive) protects the MOSFET from the inductive voltage spike when the coil de-energises. When GPIO 33 is HIGH and the E-stop is not pressed (NC contact closed), the gate voltage is HIGH, the MOSFET conducts, the relay energises, and motor power flows. If either GPIO 33 goes LOW or the E-stop is pressed (NC contact opens), the gate goes LOW, the MOSFET turns off, the relay de-energises, and motor power is cut—regardless of the microcontroller's state.

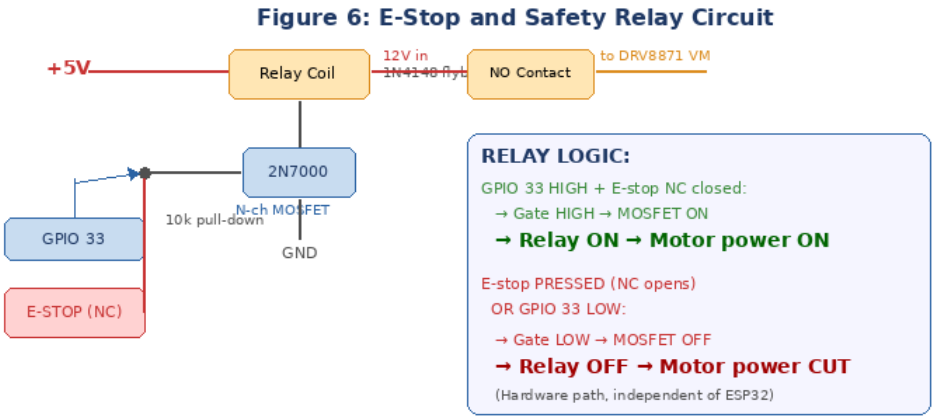

Figure 6: E-Stop and safety relay circuit — hardware-level motor power control independent of ESP32

5. SYSTEM ARCHITECTURE

5.1 Hardware Architecture

Component	Part Number	Function	Interface
Microcontroller	ESP32-WROOM-32	Dual-core control, FreeRTOS	GPIO, ADC, SPI, UART
Motor Driver	DRV8871	H-bridge, current sense	PWM GPIO 25/26, ADC GPIO 36
Shift Register	74HC595	8-channel LED driver	SPI: GPIO 23/18/0
Buck Converter	LM2596-5.0	12 V → 5 V / 3 A	On-board DC-DC
LDO Regulator	AMS1117-3.3	5 V → 3.3 V / 800 mA	On-board LDO
USB-UART Bridge	CP2102N	Programming + serial debug	UART0: GPIO 1/3
US Sensors (upstream)	HC-SR04 ×2	Dual-beam direction detect	GPIO 12/14, 27/32
US Sensors (downstream)	HC-SR04 ×2	Dual-beam direction detect	GPIO 13/33, 35/39
Deck Presence	FC-51 IR ×2	Vehicle detection on deck	GPIO 21, 22
Limit Switches	KW12-3 ×8	End-of-travel hard stops	GPIO 16,17,5,19 + 4 more
Position Feedback	10 kΩ potentiometer	Deck height measurement	ADC: GPIO 34
TFT Display	2.8″ ILI9341	HMI visualisation	SPI: GPIO 23/18/15/2/4
Servo Barriers	SG90 ×2	Road barrier actuators	PWM: GPIO 4, 15
Buzzer	Active piezo	Alarm sound patterns	GPIO 2
Safety Relay	SRD-05VDC	Motor power gate	MOSFET gate: GPIO 33
Power Input	12 V 3 A adapter	System power	Barrel jack

Geared Motor	JGA25-370 60RPM	Bridge lift drive	DRV8871 OUT1/OUT2
Lead Screws	T8×300 mm ×4	Vertical lift mechanism	Coupled to motor via GT2 belt
GT2 Timing Belt	6 mm wide, ~3 m loop	Torque distribution	Rectangular loop at tower tops
GT2 Pulleys	20T aluminium ×4	Screw-to-belt coupling	Mounted on each screw shaft

5.2 Firmware Architecture (FreeRTOS)

The ESP32 firmware runs seven concurrent FreeRTOS tasks distributed across both CPU cores. Tasks are coordinated through a mutex-protected SharedStatus_t structure and inter-task event queues (xQueueSend/xQueueReceive). The dual-core architecture places time-critical tasks (safety, FSM, motor, sensors) on Core 1, and less critical tasks (traffic, HMI) on Core 0.

Task	Core	Priority	Period	Function
Safety Watchdog	1	25 (highest)	5 ms	E-stop polling, overcurrent ADC check, limit switch ISR, anti-jam detection (current vs. position), FreeRTOS TWDT feed
FSM Engine	1	24	10 ms	Table-driven state machine: reads event queue, evaluates guard condition function pointers, executes transition action callbacks, updates state
Motor Control	1	23	10 ms	Reads potentiometer via ADC, applies PWM speed ramp (acceleration/deceleration), enforces soft position limits, outputs PWM to DRV8871
Sensor Poll	1	22	20 ms	Sequences dual-beam ultrasonic measurements (Beam A then B at each station), debounces IR inputs, runs direction-determination algorithm, posts events
Traffic Control	0	15	50 ms	Shifts LED pattern byte to 74HC595, sweeps servo positions in 3° increments with 30 ms delay, generates buzzer alarm patterns per state
HMI Input	0	12	50 ms	Debounces Mode, Raise, Lower, Reset pushbuttons and E-stop GPIO. Posts manual command events to FSM event queue
HMI Display	0	10	200 ms	Renders TFT screen: state name, deck height bar gauge (0–180 mm), motor current, sensor status icons, fault banner, mode indicator

5.3 System State Machine

The FSM governs all system transitions through a table of (current_state, event, guard_function, action_function, next_state) tuples. Guard functions return true only if all preconditions are met. Action functions execute the transition (e.g., setting motor direction, updating traffic lights). The ten system states and their key transitions are:

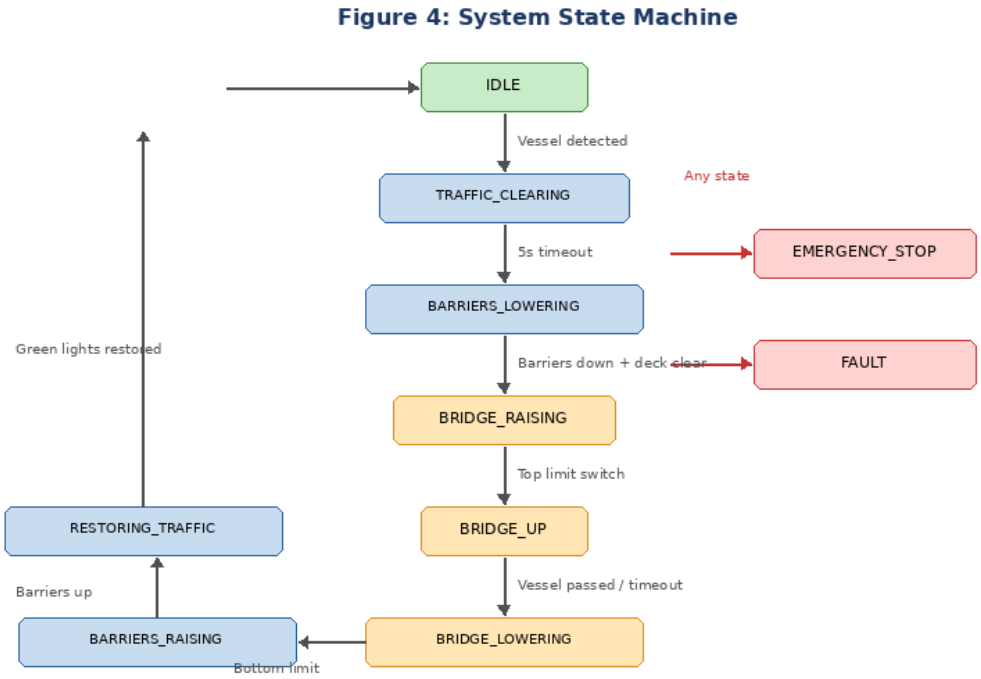

Figure 4: System state machine — ten states governing the complete bridge operation cycle

From State	Event	Guard	To State
IDLE	EVT_VESSEL_DETECTED	Auto mode, no faults, no E-stop	TRAFFIC_CLEARING
IDLE	EVT_MANUAL_RAISE	Manual mode, no faults, no E-stop	TRAFFIC_CLEARING
TRAFFIC_CLEARING	EVT_TIMEOUT (5 s)	Road signals are red	BARRIERS_LOWERING
BARRIERS_LOWERING	EVT_BARRIERS_DOWN	Both barriers at 90°, deck clear on both IR sensors for 2 s	BRIDGE_RAISING
BRIDGE_RAISING	EVT_LIMIT_TOP	Top limit switch activated	BRIDGE_UP
BRIDGE_UP	EVT_VESSEL_PASSED	Downstream dual-beam station triggered	BRIDGE_LOWERING

BRIDGE_UP	EVT_HOLD_TIMEOUT	15-second fallback	BRIDGE_LOWERING
BRIDGE_LOWERING	EVT_LIMIT_BOTTOM	Bottom limit switch activated	BARRIERS_RAISING
BARRIERS_RAISING	EVT_BARRIERS_UP	Both barriers at 0°	RESTORING_TRAFFIC
RESTORING_TRAFFIC	EVT_TRAFFIC_OK	Road signals are green	IDLE
ANY STATE	EVT_ESTOP	Always accepted	EMERGENCY_STOP
ANY STATE	EVT_FAULT	Always accepted	FAULT

6. CUSTOM PRINTED CIRCUIT BOARD

The PCB is designed in KiCad 8 and fabricated by JLCPCB. Board dimensions: 100 mm × 80 mm, two-layer FR4 with HASL (Hot Air Solder Levelling) surface finish and green solder mask. The design uses a hierarchical schematic with six sub-sheets: (A) Power Supply, (B) ESP32 Module, (C) USB-UART Bridge, (D) Motor Driver, (E) Shift Register and LEDs, (F) Connectors and Safety.

Layout guidelines: The bottom copper layer (B.Cu) is a continuous ground plane for low-impedance return paths and EMI reduction. All signal traces are routed on the top layer (F.Cu). Signal traces are 0.5 mm (20 mil) minimum width. The 5 V power traces are 1.0 mm (40 mil). The 12 V and motor current traces are 1.5 mm (60 mil). The LM2596 switching regulator and its inductor/diode are placed as far as possible from the ESP32 antenna to minimise switching noise coupling. All IC decoupling capacitors are placed within 5 mm of their respective VCC pins. Four M3 mounting holes (3.2 mm diameter) are placed at the corners, 5 mm from the board edges, for securing the PCB to the base platform with nylon standoffs.

7. BILL OF MATERIALS

The following table lists every component required to build the complete system, including all components that will be soldered to the PCB. Prices are sourced from Nerokas (store.nerokas.co.ke), Pixel Electronics (pixelectronics.co.ke), and local Nairobi electronics shops on Luthuli Avenue. JLCPCB pricing includes DHL shipping to Nairobi.

7.1 PCB Components (soldered to board)

Item	Part Number	Qty	Unit Price (KES)	Total (KES)	Source
ESP32-WROOM-32 Module	ESP32-WROOM-32	1	850	850	Nerokas
CP2102N USB-UART IC	CP2102N-A01	1	200	200	ASK Electronics
DRV8871 Motor Driver	DRV8871DDAR	1	350	350	ASK Electronics
74HC595 Shift Register	SN74HC595N	1	40	40	Sagana / Luthuli Ave
LM2596-5.0 Buck Converter	LM2596S-5.0	1	120	120	Nerokas
AMS1117-3.3 LDO	AMS1117-3.3	1	30	30	Sagana / Luthuli Ave
330 µH Power Inductor	SRN8040-330M	1	50	50	Nerokas
1N5824 Schottky Diode (3A)	1N5824	1	20	20	Sagana / Luthuli Ave
SS34 Schottky Diode (polarity)	SS34	1	15	15	Sagana / Luthuli Ave
1N4148 Signal Diode (flyback)	1N4148	1	5	5	Sagana / Luthuli Ave
2N3904 NPN Transistor	2N3904	2	10	20	Sagana / Luthuli Ave
2N7000 N-ch MOSFET	2N7000	1	20	20	Sagana / Luthuli Ave
USB Type-C Connector	USB-C 16-pin SMD	1	60	60	Nerokas
SRD-05VDC Relay	SRD-05VDC-SL-C	1	100	100	Nerokas
100 µF/25V Electrolytic Cap	Radial	2	15	30	Sagana / Luthuli Ave
220 µF/16V Electrolytic Cap	Radial	1	15	15	Sagana / Luthuli Ave
10 µF Tantalum Cap	SMD/TH	2	25	50	Sagana / Luthuli Ave
100 nF Ceramic Cap	MLCC 0805	10	3	30	Sagana / Luthuli Ave
Resistors (various values)	1/4W 1%	30	2	60	Sagana / Luthuli Ave
5 mm LED Red	Water clear	4	5	20	Sagana / Luthuli Ave
5 mm LED Yellow	Water clear	2	5	10	Sagana / Luthuli Ave

5 mm LED Green	Water clear	4	5	20	Sagana / Luthuli Ave
Barrel Jack 5.5×2.1 mm	PCB mount	1	30	30	Sagana / Luthuli Ave
2-pin Screw Terminal	5.08 mm pitch	2	15	30	Sagana / Luthuli Ave
JST-XH 3-pin Header	2.5 mm pitch	6	10	60	Nerokas
JST-XH 4-pin Header	2.5 mm pitch	4	12	48	Nerokas
2×5 Pin Header (TFT)	2.54 mm pitch	1	10	10	Sagana / Luthuli Ave
2×4 Pin Header (panel)	2.54 mm pitch	1	10	10	Sagana / Luthuli Ave
Green Power LED	3 mm	1	5	5	Sagana / Luthuli Ave
PCB Components Subtotal				**2,308**	

7.2 Off-Board Electronic Components

Item	Part Number	Qty	Unit Price (KES)	Total (KES)	Source
HC-SR04 Ultrasonic Sensor	HC-SR04	4	350	1,400	Nerokas
FC-51 IR Obstacle Sensor	FC-51	2	120	240	Pixel Electronics
KW12-3 Microswitch	KW12-3	8	40	320	Sagana / Luthuli Ave
10 kΩ Linear Potentiometer	B10K	1	50	50	Sagana / Luthuli Ave
SG90 Micro Servo	SG90	2	250	500	Nerokas
Active Piezo Buzzer	12 V	1	50	50	Sagana / Luthuli Ave
2.8″ ILI9341 TFT Display	SPI	1	650	650	Nerokas
Tactile Pushbuttons	6×6 mm	4	10	40	Sagana / Luthuli Ave
E-Stop Latching Button	NC, red, 22 mm	1	250	250	Nerokas
SPDT Toggle Switch	ON-ON	1	50	50	Sagana / Luthuli Ave
12 V 3A DC Power Adapter	5.5×2.1 mm plug	1	500	500	Nerokas
JGA25-370 Geared Motor 60RPM	12 V DC	1	450	450	Nerokas

Off-Board Electronics Subtotal				**4,500**	

7.3 Mechanical Components

Item	Description	Qty	Unit Price (KES)	Total (KES)	Source
T8 Lead Screw + Brass Nut	T8×8mm lead, 300 mm	4	450	1,800	Nerokas
GT2 Timing Belt (open)	2 mm pitch, 6 mm wide, per metre	3	350	1,050	Nerokas
GT2 20T Pulley (5mm bore)	Aluminium, 20 teeth, 5 mm bore	4	350	1,400	K-Technics
GT2 Idler Pulley	Smooth, 5 mm bore (tensioner)	2	200	400	Nerokas
Shaft Bearings	608ZZ, 8 mm bore	8	80	640	ASK Electronics
Aluminium Angle Rails	10×10 mm, 300 mm	8	100	800	Sagana / Luthuli Ave
Plywood Base Platform	900×600 mm, 12 mm	1	400	400	Sagana / Luthuli Ave
Plywood Tower Panels	10 mm, 600×300 mm	1	250	250	Sagana / Luthuli Ave
Acrylic Sheet (deck)	5 mm, A3 size	1	400	400	Pixel Electronics
L-Brackets, Bolts, Nuts Kit	M3/M4 assorted	1	400	400	ASK Electronics
M3 Nylon Standoffs (PCB)	10 mm, M3	8	15	120	Sagana / Luthuli Ave
Flexible Shaft Coupling	5 mm to 8 mm	1	150	150	Nerokas
Mechanical Subtotal				**7,810**	

7.4 Fabrication and Consumables

Item	Description	Qty	Unit Price (KES)	Total (KES)	Source
PCB Fabrication	JLCPCB, 5 boards, 2-layer, HASL, green	1 order	2,100	2,100	JLCPCB (incl. DHL)
Solder Wire	60/40, 0.8 mm, 50 g	1	200	200	Sagana / Luthuli Ave

Wire (hookup)	22 AWG, assorted colours, 10 m	1	150	150	Sagana / Luthuli Ave
Heat Shrink Tubing	Assorted diameters	1 pack	100	100	Sagana / Luthuli Ave
Cable Ties	100 mm, 50 pack	1	50	50	Sagana / Luthuli Ave
Paint + Vinyl Tape	Grey, white, blue	1 set	100	100	Sagana / Luthuli Ave
Fabrication Subtotal				**2,700**	

Category	Cost (KES)
PCB Components (soldered)	2,308
Off-Board Electronics	4,500
Mechanical Components	7,810
Fabrication and Consumables	2,700
GRAND TOTAL	**17,318**
PER MEMBER (5 members)	**~KES 3,464**

8. PROPOSED BUILD TIMELINE

Phase	Week	Deliverable
1	Week 1	KiCad schematic complete (6 sub-sheets). PCB layout with DRC clean. Gerber files generated and JLCPCB order placed. BOM finalised and procurement from Nerokas, Pixel Electronics, and Luthuli Avenue started.
2	Week 2	pin_config.h and system_types.h committed to Git repository. FreeRTOS task skeleton with event queues and mutexes operational. All module header files (.h) published with agreed APIs. Mechanical base platform and tower construction begins.
3	Week 3	PCBs arrive from JLCPCB. Assembly in strict soldering sequence: SMD passives → AMS1117 (test 3.3 V) → LM2596 (test 5 V) → CP2102N (test USB COM port) → DRV8871 (test VPROPI) → 74HC595 (test LED shift) → ESP32 (test blink via USB) → connectors → relay + MOSFET. Each power rail tested with multimeter before soldering downstream components.
4	Weeks 3–4	Individual firmware modules developed and unit-tested: motor driver + potentiometer feedback, dual-beam ultrasonic sensor + direction algorithm, traffic light sequencing + servo barriers, TFT display rendering + button input, safety watchdog + fault register.
5	Week 5	Mechanical assembly complete: towers, guide rails, lead screws, GT2 belt and pulleys, deck, sensors, traffic lights, barriers, PCB — all mounted on base platform and wired to PCB via JST-XH connectors.
6	Week 6	Full system integration testing. FSM walk-through in both AUTO and MANUAL modes. All fault scenarios deliberately triggered: E-stop press,

		overcurrent (stall motor by hand), anti-jam (block guide rail), limit switch override, deck-occupied interlock. Pass criterion: 20 consecutive automatic cycles without fault.
7	Week 7	Parameter tuning: motor PWM speed, servo sweep rate, traffic light phase timing, ultrasonic detection threshold, hold timeout duration. System robustness hardening.
8	Week 8	Technical report writing, demonstration script, and presentation slides completed. Live demonstration to lecturer. Demo backup video recorded.

9. MICROPROCESSOR CONCEPTS DEMONSTRATED

The following EEE 2412 Microprocessors II course concepts are directly and demonstrably applied in this project:

Concept	Implementation in This Project
GPIO Control	Motor driver IN1/IN2, relay MOSFET gate, shift register data/clock/latch, servo signals, buzzer, traffic LEDs (via 74HC595), limit switches, E-stop, mode switch, and four pushbuttons — all managed through ESP32 GPIO pins configured as inputs or outputs.
ADC (Analogue-to-Digital Conversion)	ESP32 12-bit ADC reads DRV8871 VPROPI current-sense output (GPIO 36) and potentiometer deck-height feedback (GPIO 34) with 16-sample oversampling and averaging for noise rejection.
PWM (Pulse Width Modulation)	LEDC peripheral generates 20 kHz PWM on GPIO 25/26 for DRV8871 motor speed control (8-bit resolution, 0–255 duty), and 50 Hz PWM on GPIO 4/15 for SG90 servo position (500–2400 µs pulse width).
Interrupt-Driven I/O	Limit switch triggers use GPIO interrupts (FALLING edge) for deterministic sub-millisecond motor cutoff independent of the task scheduler. E-stop detection uses a GPIO interrupt. Ultrasonic echo timing uses hardware timer capture.
SPI Communication	The 74HC595 shift register and ILI9341 TFT display share the SPI bus (GPIO 23 MOSI, GPIO 18 SCLK) with separate chip select lines (GPIO 0 for latch, GPIO 15 for TFT CS). A FreeRTOS mutex prevents simultaneous bus access.
Timer Peripherals	FreeRTOS tick timer (1 ms), LEDC PWM timer channels, ultrasonic echo measurement using esp_timer, traffic light phase timers using xTimerCreate, and debounce timers for pushbuttons.
RTOS / Multitasking	FreeRTOS manages seven concurrent tasks with priority scheduling across dual cores (Core 0 and Core 1), mutex-protected shared state (SharedStatus_t), and inter-task event queues (xQueueSend/xQueueReceive).
State Machine Design	Ten-state finite state machine implemented as a table of transition structures. Each entry contains: current_state, event, guard_function_pointer, action_function_pointer, next_state. The FSM engine iterates the table every 10 ms.
Non-Volatile Memory	Potentiometer calibration endpoints (ADC values at deck bottom and top), ultrasonic detection threshold, and overcurrent threshold are stored

	in ESP32 NVS (Non-Volatile Storage) partition, persistent across power cycles.
Watchdog Timer	FreeRTOS Task Watchdog Timer (TWDT) monitors the safety watchdog task. If the task fails to call esp_task_wdt_reset() within 500 ms (indicating a task hang or crash), the ESP32 triggers a hardware reset, ensuring fail-safe behaviour.

10. GROUP ROLE ALLOCATION

Task allocations will be formally agreed upon by the group following lecturer approval of this proposal. Indicative responsibilities are listed below as a working framework:

Role	Responsibilities	Member
Firmware Lead (Member 1)	FreeRTOS architecture, FSM engine, pin_config.h, system_types.h, event queues and mutexes, boot sequence, main.cpp, system integration lead.	TBD
Mechanism Lead (Member 2)	Tower and deck construction, motor mounting, GT2 timing belt and pulley assembly, lead screw installation, guide rail alignment, potentiometer calibration, limit switch positioning.	TBD
Sensors Lead (Member 3)	Dual-beam HC-SR04 driver code, direction-determination algorithm, FC-51 IR sensor integration, generic debounce engine, sensor calibration, event generation.	TBD
HMI Lead (Member 4)	74HC595 LED shift-out driver, traffic light phase sequencing, servo barrier sweep code, buzzer alarm patterns, TFT display rendering (TFT_eSPI), button input debounce and event posting.	TBD
PCB and Safety Lead (Member 5)	KiCad schematic and PCB layout design, Gerber generation, JLCPCB order, power supply design, E-stop relay circuit, safety watchdog firmware, fault register, BOM management, PCB assembly lead.	TBD

11. CONCLUSION

The Automatic Vertical Lift Bridge Control System fully satisfies the requirements of the EEE 2412 Microprocessors II project. It provides a complete, physically operational scale-model bridge with automated directional vessel detection, mechanically synchronised four-point vertical lift, sequenced traffic management, comprehensive safety interlocks, and a local TFT-based Human Machine Interface—all governed by an ESP32 running FreeRTOS with seven concurrent tasks.

The mechanically-linked four-screw drive system, using a GT2 timing belt loop and four pulleys driven by a single motor, eliminates electronic synchronisation complexity while guaranteeing perfectly level deck travel. The dual-beam directional sensing system at each end of the waterway correctly identifies vessel heading, handles

simultaneous bidirectional traffic, and rejects false triggers from noise or debris—capabilities absent from conventional single-sensor designs.

The project applies the full breadth of the Microprocessors II curriculum: GPIO control, analogue-to-digital conversion, pulse width modulation, interrupt-driven I/O, SPI serial communication, hardware timer peripherals, FreeRTOS real-time multitasking, finite state machine design, non-volatile memory persistence, and watchdog timer implementation. The custom PCB designed in KiCad and fabricated by JLCPCB demonstrates circuit design, layout, and integration skills beyond firmware alone.

The total component budget of approximately KES 17,318 (approximately KES 3,464 per member) is achievable within the group's means. The eight-week build timeline is realistic given the five parallel workstreams enabled by the member role allocation.

Group 5 respectfully requests the approval of this proposal to proceed to the implementation phase.

Submitted by: Group 5

Date: April 2026

_____

Lecturer Signature & Date of Approval