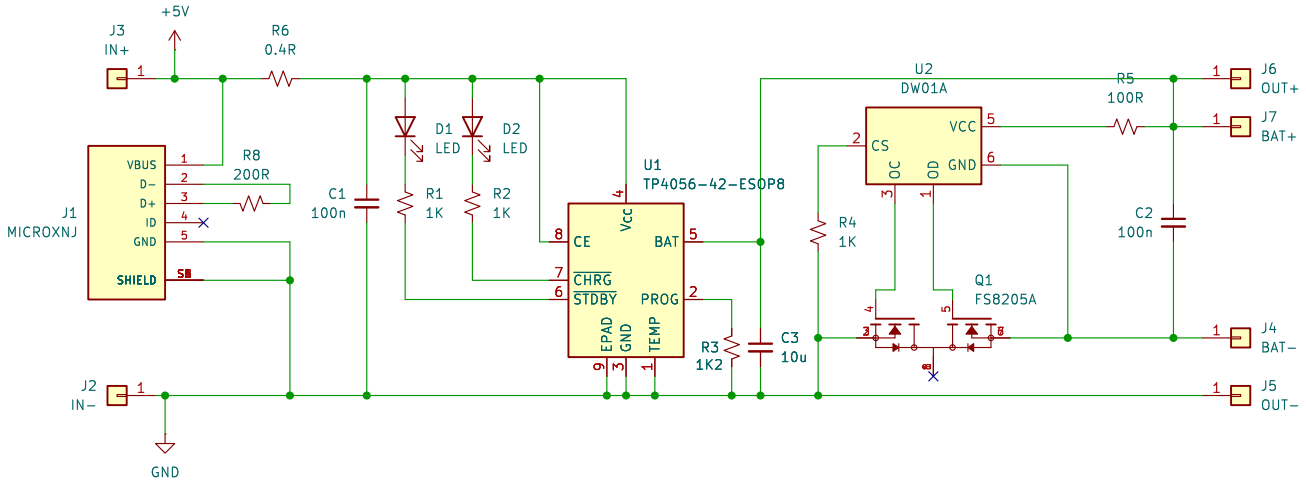

Sheet: /
File: TP4056_Charging_Module.kicad_sch

Title:

Size: A5	Date:	**Rev:**
KiCad E.D.A. 9.0.3		Id: 1/1