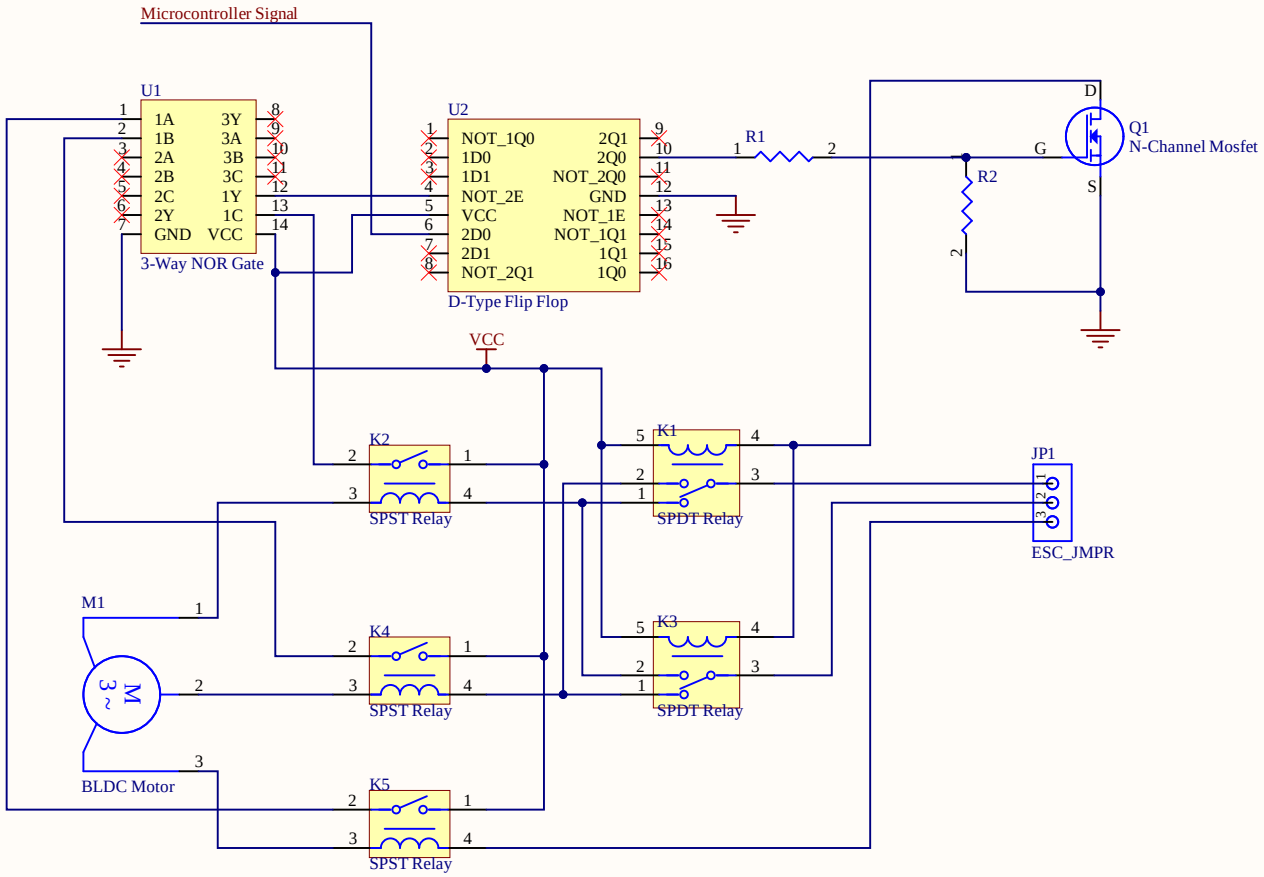

Title	BLDC Motor Reversal Schematic		
Size A4	Number		Revision Rev2
Date:	4-25-2021	Sheet of	Kiran and Nixon
File:	C:\Users\..\BLDC_Motor_Reverser.SchDoc	Drawn By:	