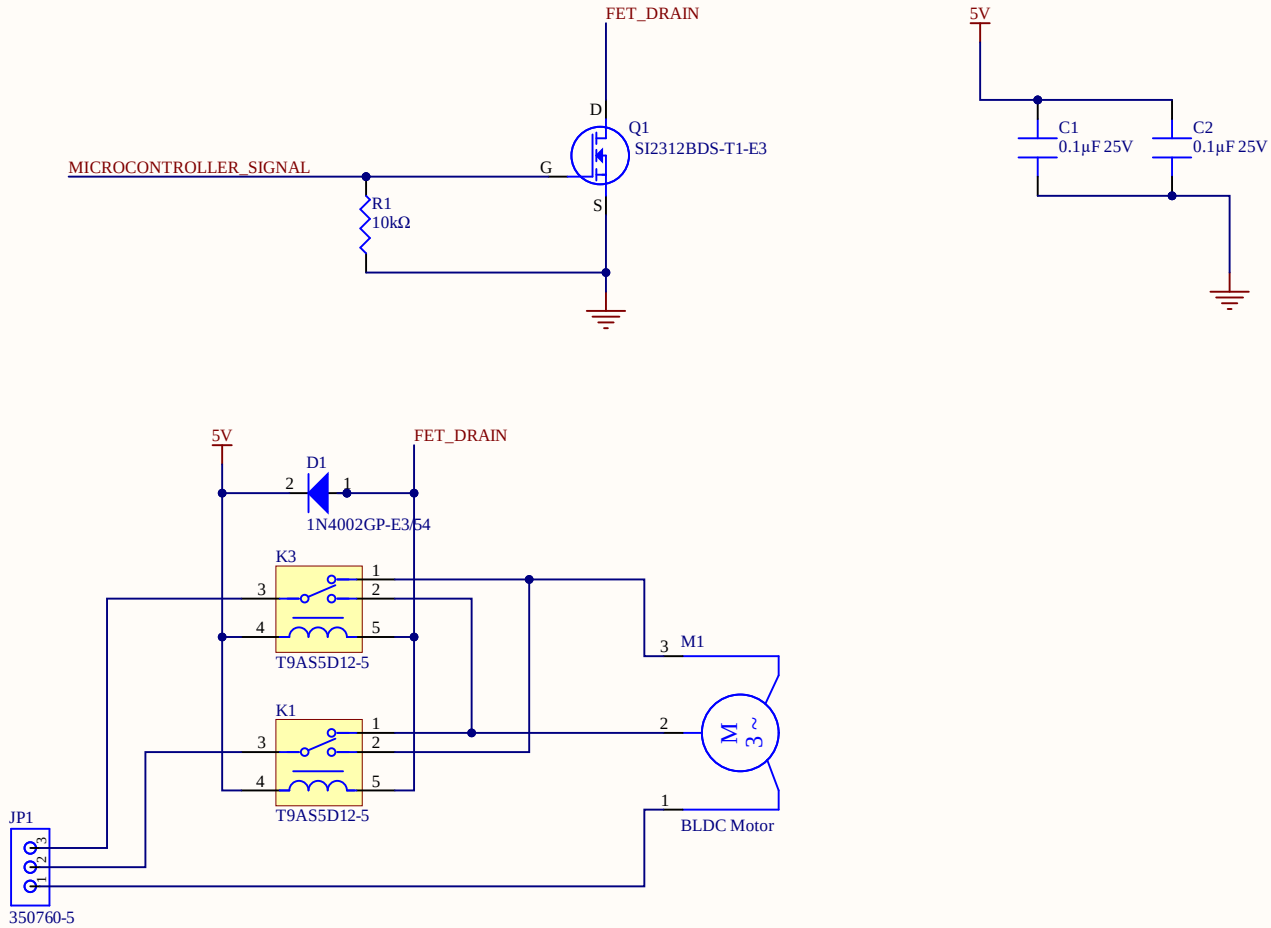

Title	BLDC Motor Reversal Schematic		
Size A4	Number		Revision Rev4.5
Date:	5-07-2021	Sheet of	Kiran and Nixon
File:	C:\Users\..\BLDC_Motor_Reverser.SchDoc	Drawn By:	