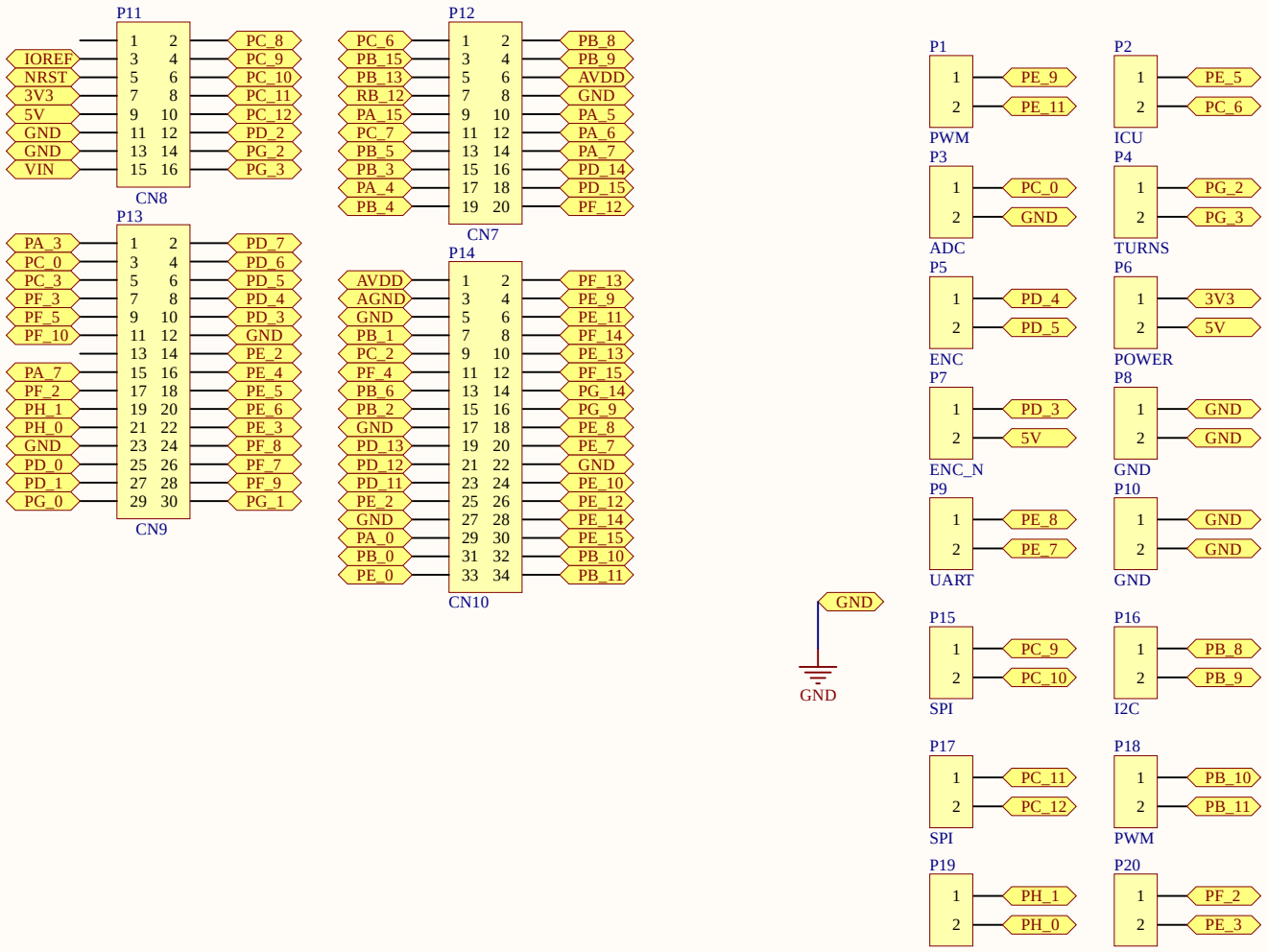

Title		
Size A4	Number	Revision
Date: 16.11.2019	Sheet of	
File: D:\Altium_projects\..\cross_STM.SchDoc	Drawn By:	

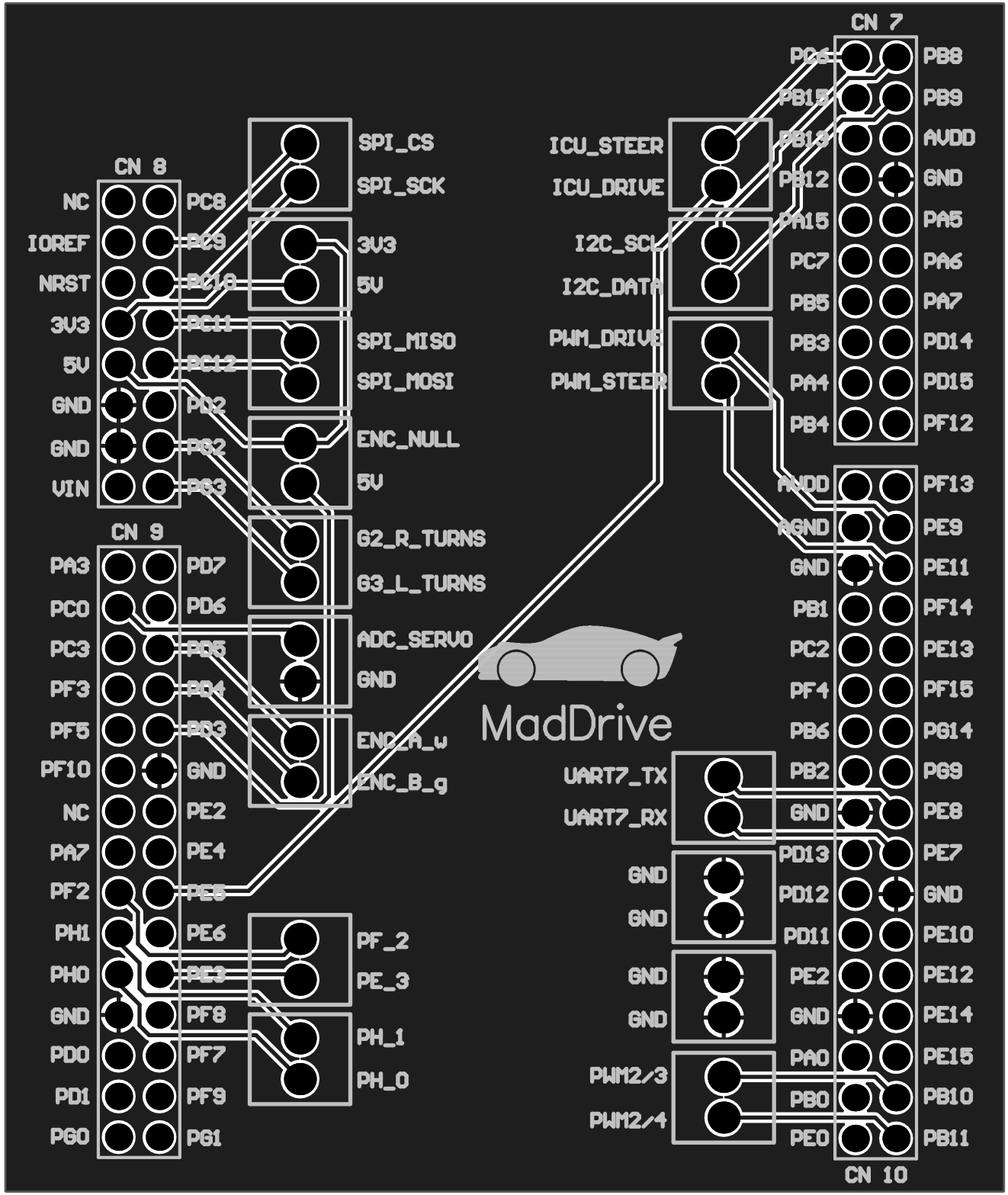
CN 7
PC5
PB15
PB13
PB12
PA15
PC7
PB5
PB3
PA4
PB4
PB8
PB9
AVDD
GND
PA5
PA6
PA7
PD14
PD15
PF12
CN 8
NC
IOREF
NRST
3V3
5V
GND
GND
VIN
PC8
PC9
PC10
PC11
PC12
PD2
PG2
PG3
CN 9
PA3
PC0
PC3
PF3
PF5
PF10
NC
PA7
PF2
PH1
PH0
GND
PD0
PD1
PG0
PD7
PD6
PD5
PD4
PD3
GND
PE2
PE4
PE5
PE6
PE3
PF8
PF7
PF9
PG1
SPI_CS
SPI_SCK
3V3
5V
SPI_MISO
SPI_MOSI
ENC_NULL
5V
G2_R_TURNS
G3_L_TURNS
ADC_SERVO
GND
ENC_A_w
ENC_B_g
PF_2
PE_3
PH_1
PH_0
ICU_STEER
ICU_DRIVE
I2C_SCL
I2C_DATA
PWM_DRIVE
PWM_STEER
MadDrive
UART7_TX
UART7_RX
GND
GND
GND
GND
PWM2/3
PWM2/4
AVDD
AGND
GND
PB1
PC2
PF4
PB6
PB2
GND
PD13
PD12
PD11
PE2
GND
PA0
PB0
PE0
PF13
PE9
PE11
PF14
PE13
PF15
PG14
PG9
PE8
PE7
GND
PE10
PE12
PE14
PE15
PB10
PB11
CN 10