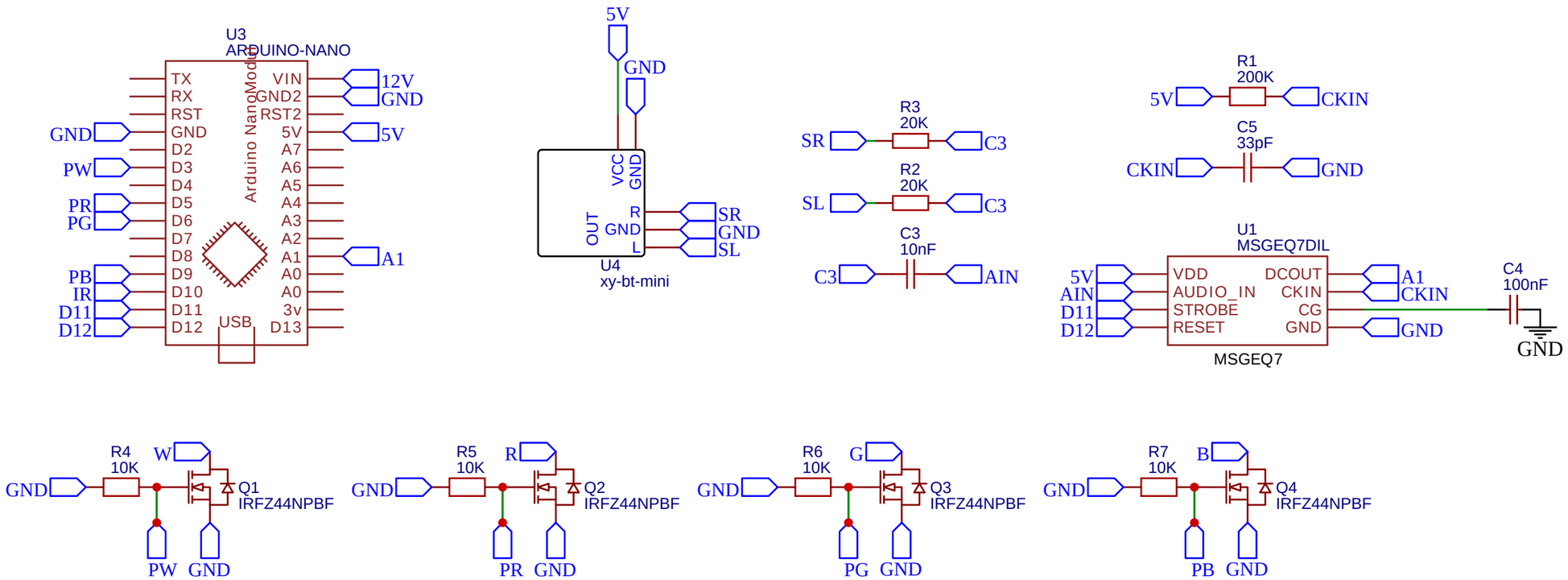

TITLE: Bluetooth Sound WRGB LED		REV: 1.1
EasyEDA	Company: KiritoTech	Sheet: 1/1
	Date: 2020-02-25 Drawn By: Kirito	