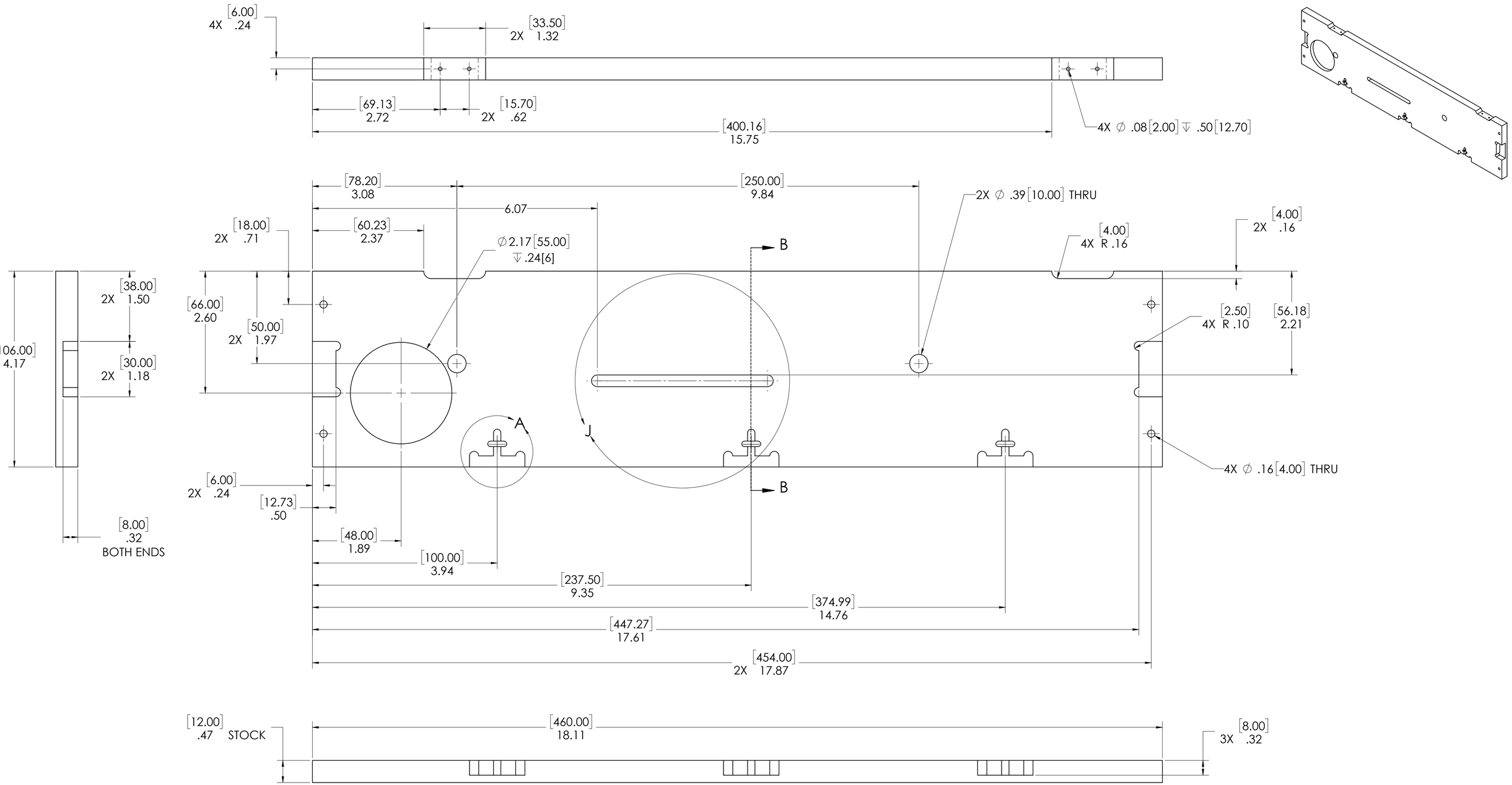

ITEM NO.	QTY.	PART NUMBER	PART DESCRIPTION	MATERIAL	FINISH	NOTE NO.
1	1	FET-008	LEFT SIDE PANEL	PLYWOOD		-

		UNLESS OTHERWISE SPECIFIED:		NAME	DATE
		DIMENSIONS ARE IN INCHES TOLERANCES: FRACTIONAL ± ANGULAR: MACH ± BEND ± TWO PLACE DECIMAL ± THREE PLACE DECIMAL ±	DRAWN	J. SNAPP	16 JAN 2020
			CHECKED		
			ENG APPR.		
			MFG APPR.		
		INTERPRET GEOMETRIC TOLERANCING PER:	Q.A.		
		MATERIAL PLYWOOD	COMMENTS:		
FET-000	freETarget	FINISH			
NEXT ASSY	USED ON				
APPLICATION					

freETarget

TITLE: LFET SIDE PANEL

SIZE D | DWG. NO. FRE-008 | REV

NTS | SHEET 1 OF 2

REV D FRE-008

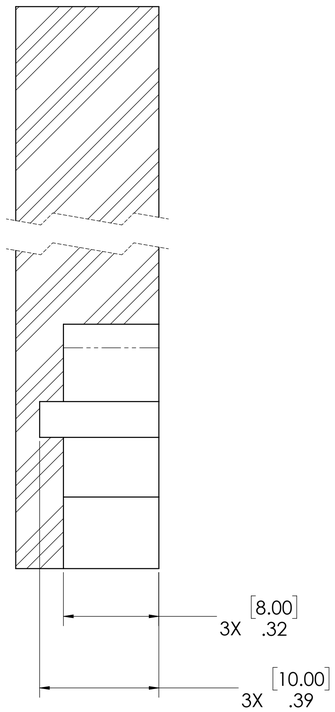

SECTION B-B
SCALE 4 : 1

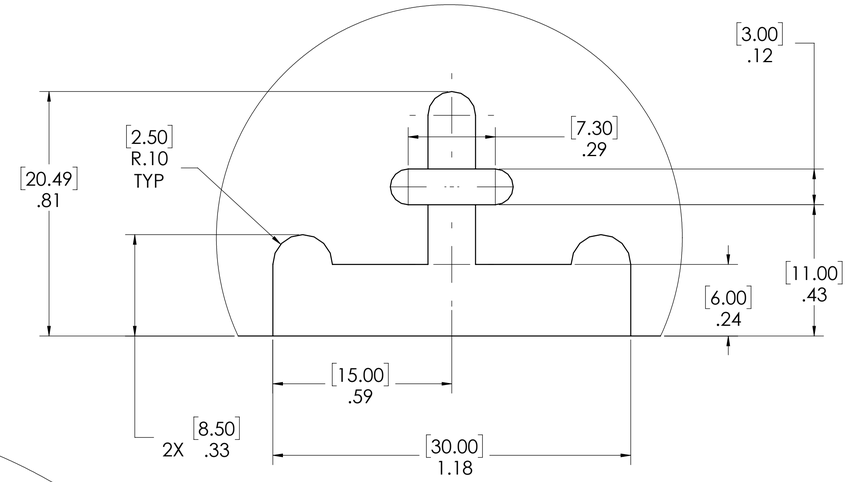

DETAIL A
SCALE 4 : 1

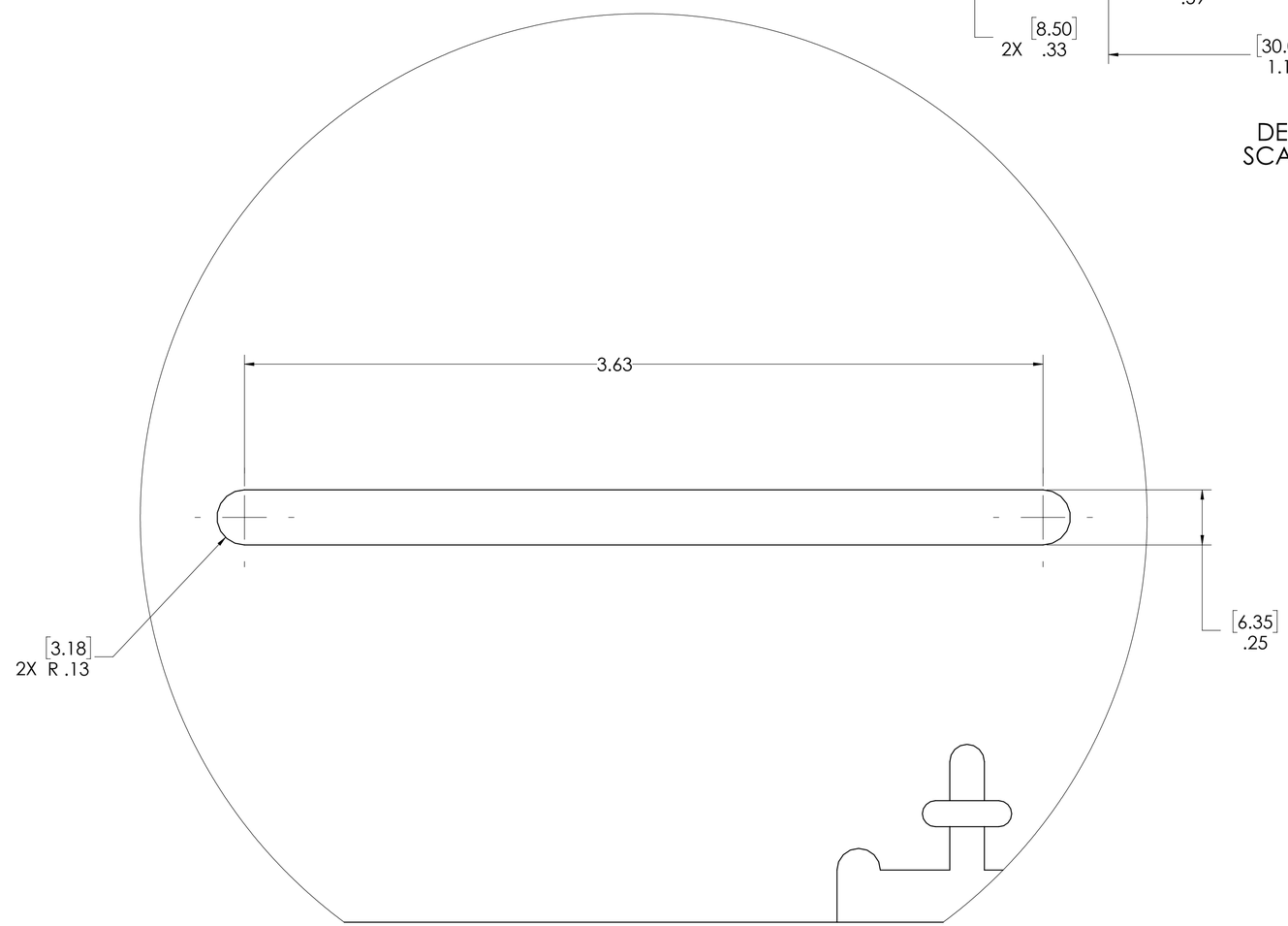

DETAIL J

SIZE	DWG. NO.	REV
D	FRE-008	
SCALE: 1:1	WEIGHT:	SHEET 2 OF 2