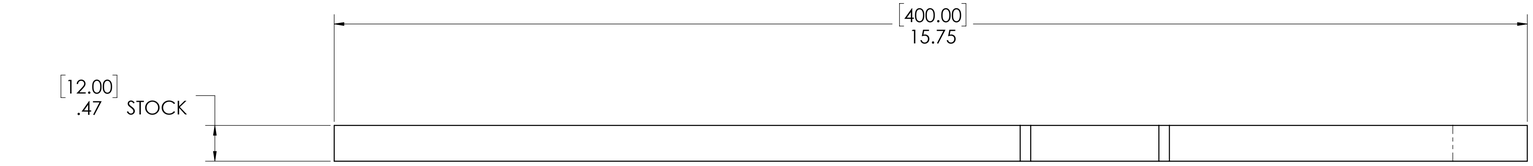

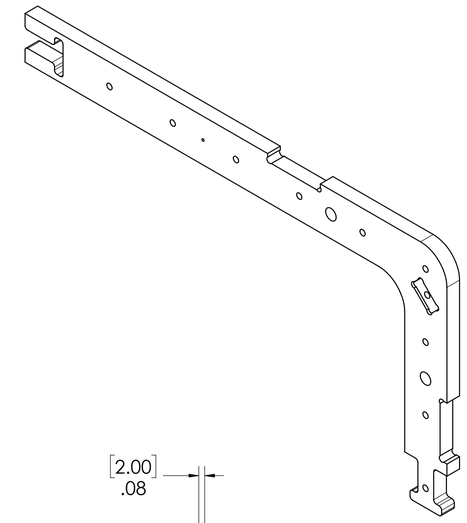

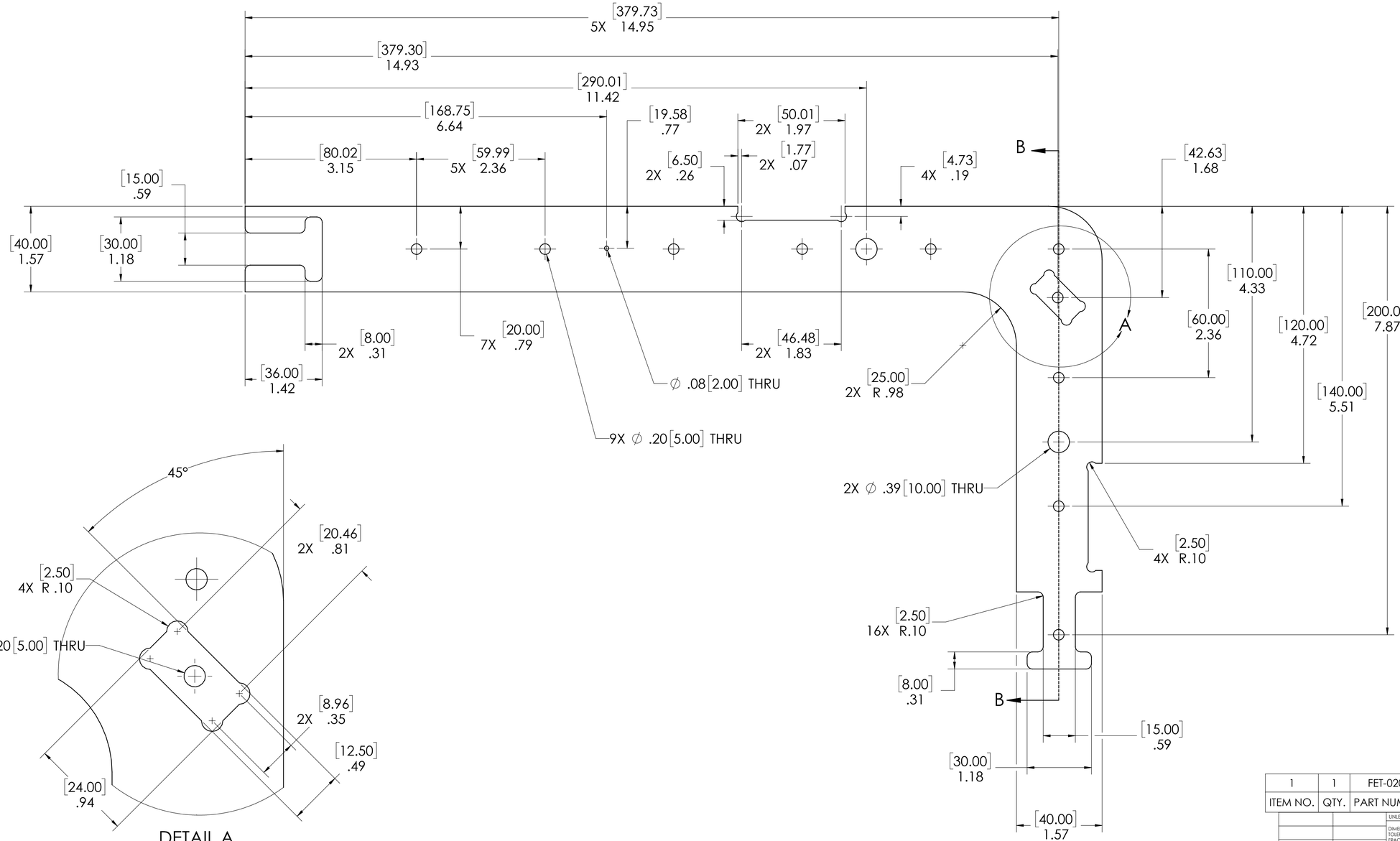

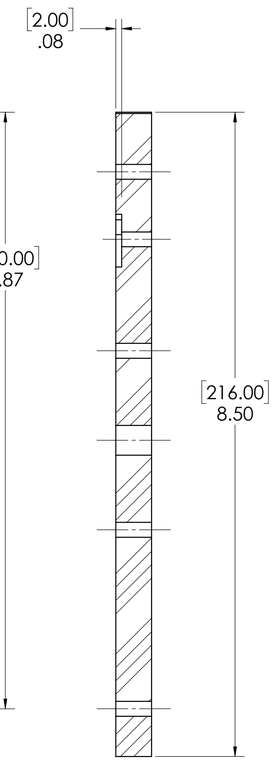

SECTION B-B

DETAIL A
SCALE 2 : 1

ITEM NO.	QTY.	PART NUMBER	PART DESCRIPTION	MATERIAL	FINISH	NOTE NO.
1	1	FET-0201	FRONT FRAME SECTION	PLYWOOD		-

			NAME	DATE
UNLESS OTHERWISE SPECIFIED: DIMENSIONS ARE IN INCHES TOLERANCES: FRACTIONAL ± ANGULAR: MACH ± BEND ± TWO PLACE DECIMAL ± THREE PLACE DECIMAL ±	DRAWN	J. SNAPP	16 MAY 25	
	CHECKED			
	ENG APPR.			
	MFG APPR.			
INTERPRET GEOMETRIC TOLERANCING PER:	Q.A.			
MATERIAL	COMMENTS:			
FINISH				

NEXT ASSY	USED ON
FET-0200	freETarget
APPLICATION	

freETarget

TITLE: FRONT CLAMP

SIZE	DWG. NO.	REV
D	FET-0201	

SCALE: 1:1 | 0.38 | SHEET 1 OF 1

FET-0201 D REV