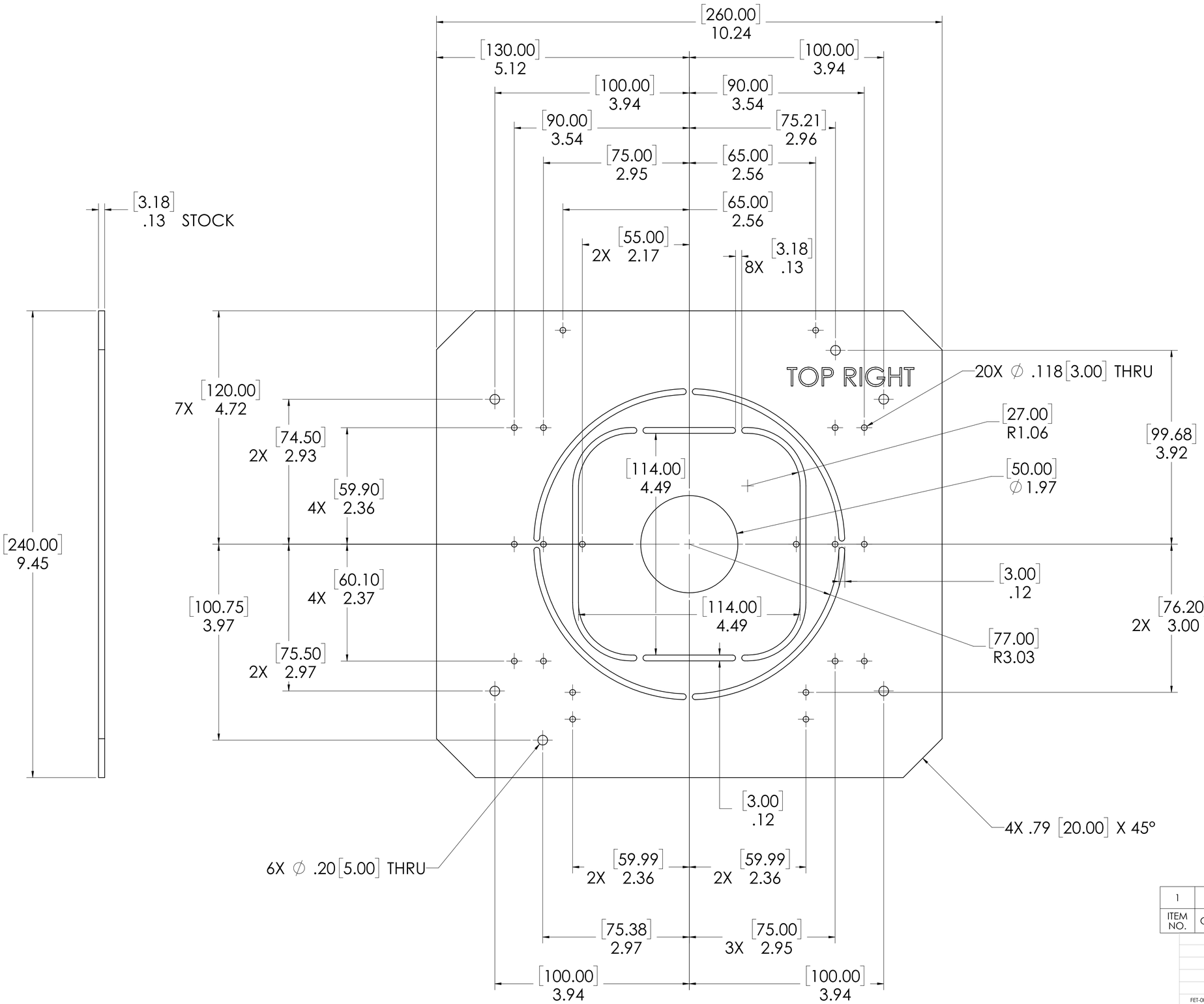

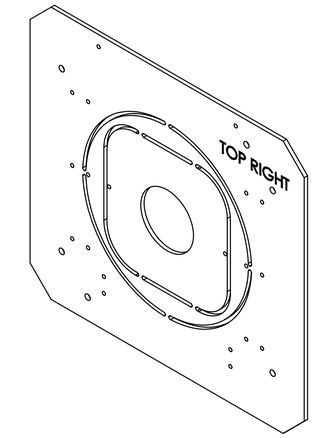

ITEM NO.	QTY.	PART NUMBER	PART DESCRIPTION	MATERIAL	FINISH	NOTE NO.
1	1	FET-016	FACE PLATE	PLYWOOD		-

UNLESS OTHERWISE SPECIFIED:
DIMENSIONS ARE IN INCHES
TOLERANCES:
FRACTIONAL ±
ANGULAR: MACH ± BEND ±
TWO PLACE DECIMAL ±
THREE PLACE DECIMAL ±
INTERPRET GEOMETRIC TOLERANCING PER:
MATERIAL
PLYWOOD
FINISH

	NAME	DATE
DRAWN	J. SNAPP	
CHECKED		
ENG APPR.		
MFG APPR.		
Q.A.		

COMMENTS:

NEXT ASSY	USED ON
FET-000	freETarget

APPLICATION

freETarget

TITLE:
FACE PLATE

SIZE	DWG. NO.	REV
D	FET-016	
-	0.27	SHEET 1 OF 1