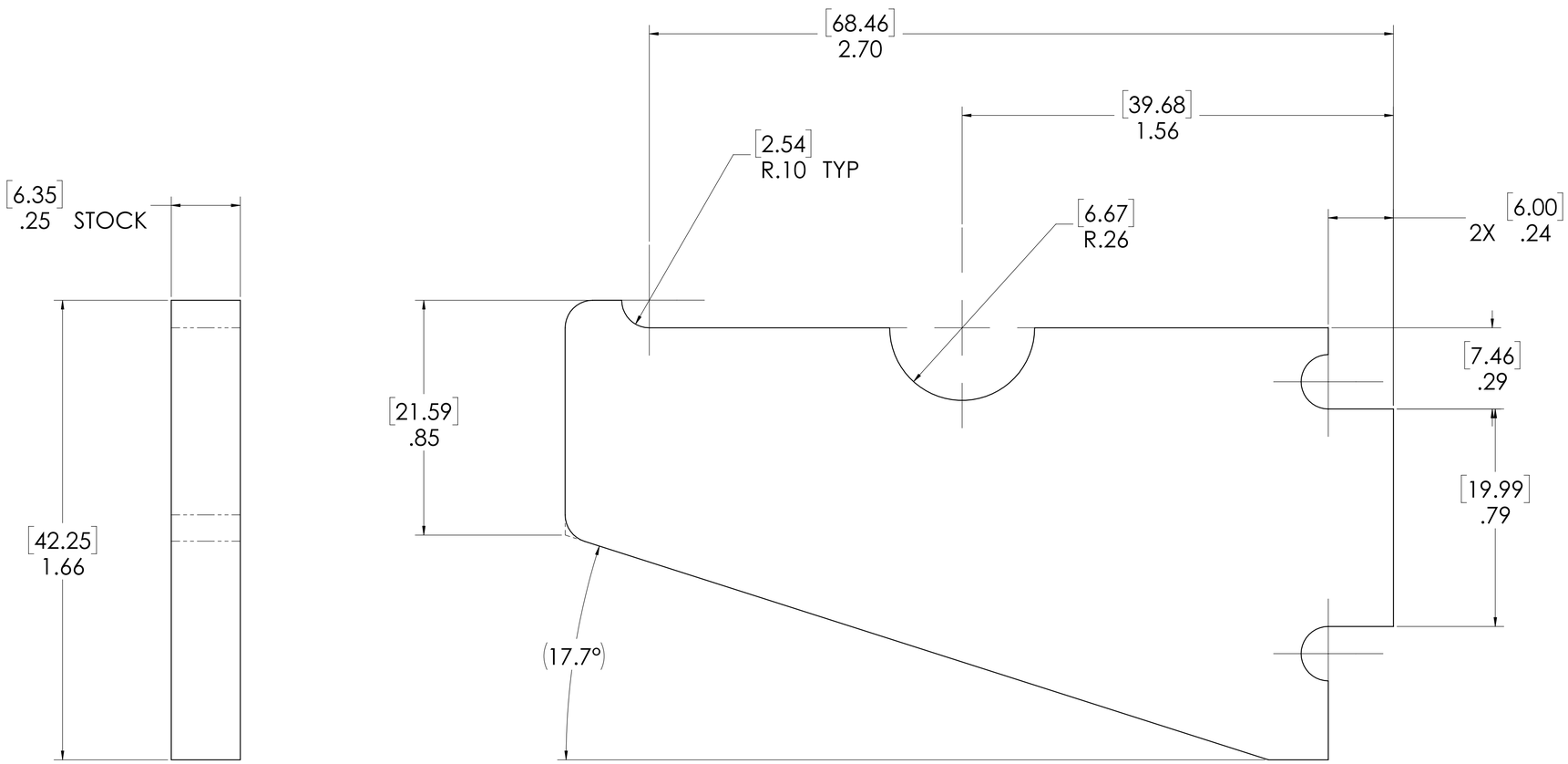

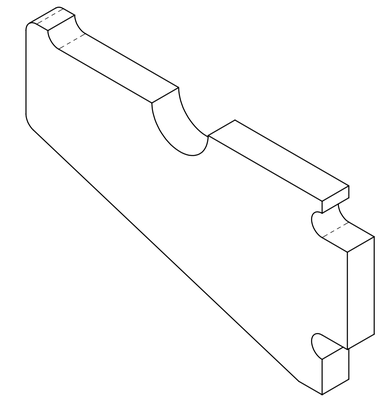

ITEM NO.	QTY.	PART NUMBER	PART DESCRIPTION	MATERIAL	FINISH	NOTE NO.
1	1	FET-012	WITNESS PAPER MOUNT	PLYWOOD		-

UNLESS OTHERWISE SPECIFIED:
DIMENSIONS ARE IN INCHES
TOLERANCES:
FRACTIONAL ±
ANGULAR: MACH ± BEND ±
TWO PLACE DECIMAL ±
THREE PLACE DECIMAL ±
INTERPRET GEOMETRIC TOLERANCING PER:
MATERIAL PLYWOOD
FINISH

	NAME	DATE
DRAWN	J. SNAPP	18 JAN 2025
CHECKED		
ENG APPR.		
MFG APPR.		
Q.A.		

COMMENTS:

NEXT ASSY	USED ON
FET-000	freETarget

APPLICATION

freETarget

TITLE:
WITNESS PAPER SUPPORT

SIZE D | DWG. NO. FET-012 | REV -

0.02 | SHEET 1 OF 1

REV D FET-012