L.A. COUNTY ACCESSORY DWELLING UNIT STANDARD PLAN NO. 27003

ATTACHMENT A

BEST MANAGEMENT PRACTICES
FOR CONSTRUCTION ACTIVITIES*

Storm Water Pollution Control Requirements for Construction Activities
Minimum Water Quality Protection Requirements for All Development Construction Projects/Certification Statement

The following is intended as minimum notes or as an attachment for building and grading plans and represent the minimum standards of good housekeeping that must be implemented on all construction sites regardless of size. (Applies to all permits)

- Eroded sediments and other pollutants must be retained on site and may not be transported from the site via sheetflow, swales, area drains, natural drainage courses or wind.
- Stockpiles of earth and other construction related materials must be protected from being transported from the site by the forces of wind or water.
- Fuels, oils, solvents and other toxic materials must be stored in accordance with their listing and are not to contaminate the soil and surface waters. All approved storage containers are to be protected from the weather. Spills must be cleaned up immediately and disposed of in a proper manner. Spills may not be washed into the drainage system.
- Non-stormwater runoff from equipment and vehicle washing and any other activity shall be contained at the project site.
- Excess or waste concrete may not be washed into the public way or any other drainage system. Provisions shall be made to retain concrete wastes on site until they can be disposed of as solid waste.
- Trash and construction related solid wastes must be deposited into a covered receptacle to prevent contamination of rainwater and dispersal by wind.
- Sediments and other materials may not be tracked from the site by vehicle traffic. The construction entrance roadways must be stabilized so as to inhibit sediments from being deposited into the public way. Accidental depositions must be swept up immediately and may not be washed down by rain or other means.
- Any slopes with disturbed soils or denuded of vegetation must be stabilized so as to inhibit erosion by wind and water.
- Other: _____

As the project owner or authorized agent of the owner, I have read and understand the requirements listed above, necessary to control storm water pollution from sediments, erosion, and construction materials, and I certify that I will comply with these requirements.

Print Name _____
(Owner or authorized agent of the owner)

Signature _____ Date _____
(Owner or authorized agent of the owner)

*The above Best Management Practices are detailed in the California Storm Water Best Management Practices Handbook, January 2003. www.calbmphandbooks.com

Attachment A BMP Notes.doc

THE ADU STANDARD PLAN IS BASED ON THE STRUCTURAL DESIGN CIRTERIA LIMITATIONS ON SHEET SP INCLUDING GEOLOGIC, CLIMATIC & TOPOGRAPHIC CONDITIONS. THIS STANDARD DOES NOT APPLY IF THE PROPOSED PROJECT MEETS ONE OF THE FOLLOWING CONDITIONS BELOW:

1. HILLSIDE PROPERTIES
2. VERY HIGH FIRE HAZARD SEVERITY ZONE
3. GEOLOGIC HAZARD ZONES
4. METHANE GAS HAZARD ZONES
5. FLOOD HAZARD ZONES
6. RESTRICTED USE AREAS
7. SEPTIC TANK AREAS
8. ENFORCEMENT CASES

STANDARD PLANS SHALL BE VALID FOR A PERIOD OF ONE YEAR FROM THE DATE OF APPROVAL. THIS PERIOD MAY BE EXTENDED BY THE BUILDING OFFICIAL WHEN THERE IS EVIDENCE THAT THE PLANS MAY BE USED AGAIN, AND THE PLANS SHOW COMPLIANCE WITH THIS CODE AND ALL OTHER APPLICABLE LAWS AND ORDINANCES.

BY USING THESE STANDARD PLANS, THE USER AGREES TO RELEASE THE COUNTY OF LOS ANGELES FROM ANY AND ALL CLAIMS, LIABILITIES, SUITES AND DEMANDS ON ACCOUNT OF ANY INJURY OR DEATH, OR ECONOMIC LOSSES,ARISING OUT OF THE USE OF THESE CONSTRUCTION DOCUMENTS. THE USE OF THESE PLANS DOES NOT ELIMINATE OR REDUCE THE USER'S RESPONSIBILITY TO VERIFY ANY AND ALL INFORMATION.

AVAILABLE CONNECTION:

1-ELECTRICAL SUBPANEL:	AMPS
2-SEWER CONNECTION:	YES OR NO
3-WATER METER CONNECTION:	YES OR NO
4-DISTANCE TO THE NEAREST HYDRANT:	FT
5-HYDRANT FIRE FLOW CAPACITY:	GPM
6-ADU VEHICULAR ACCESS TO THE STREET:	FT

PLEASE PROVIDE CERTIFIED FORM 195/6 WITH FIRE DEPARTMENT SIGNATURE

L.A. COUNTY GREEN BUILDING STANDARD CODE NOTES & TABLES SHALL BE ATTACHED TO THE PRE-APPROVED STANDARD PLANS

PLACE YOUR SITE PLAN ON THIS SHEET

ENGINEERING SCALE: 1" =

BMP LEGEND

PDS 659	BROW DITCH
PDS 659	BERM
	DIRECTION OF LOT DRAINAGE

MATERIALS & WASTE MANAGEMENT BMPs:

WM-1	MATERIAL DELIVERY & STORAGE
WM-4	SPILL PREVENTION AND CONTROL
WM-8	CONCRETE WASTE MANAGEMENT
WM-5	SOLID WASTE MANAGEMENT
WM-9	SANITARY WASTE MANAGEMENT
WM-6	HAZARDOUS WASTE MANAGEMENT

TEMPORARY RUNOFF CONTROL BMPs:

SS-2	PRESERVATION OF EXISTING VEGETATION
SS-3	BONDED OR STABILIZED FIBER MATRIX (WINTER)
SS-4	HYDROSEEDING (SUMMER)
SS-6 / SS-8	STRAW OR WOOD MULCH
SS-7	PHYSICAL STABILIZATION (WINTER)
SS-10	ENERGY DISSIPATOR
SC-1	SILT FENCE
SC-2 / PDS 659	SEDIMENT / DESILTING BASIN
SC-5	FIBER ROLLS
SC-6 / SC-8	GRAVEL OR SAND BAGS
SC-7	STREET SWEEPING AND VACUUMING
SC-10	STORM DRAIN INLET PROTECTION
NS-2	DEWATERING FILTRATION
TC-1	STABILIZED CONSTRUCTION ENTRANCE
TC-2	CONSTRUCTION ROAD STABILIZATION
TC-3	ENTRANCE / EXIT TIRE WASH

BASELINE BMPs FOR EXISTING AND PROPOSED SITE FEATURES

SD-B	DIRECT RUNOFF TO PERVIOUS AREAS
SD-C	INSTALL GREEN ROOF
SD-E	INSTALL RAIN BARRELS
SD-G	CONSERVE NATURAL FEATURES
SD-H	PROVIDE BUFFERS AROUND WATER BODIES
SD-I	CONSTRUCT SURFACES FROM PERMEABLE MATERIALS
SD-K	SUSTAINABLE LANDSCAPING

BASELINE BMPs FOR POLLUTANT-GENERATING SOURCES

SC-A	OVERHEAD COVERING
SC-B	SEPARATION OF FLOWS FROM ADJACENT AREAS
SC-C	WIND PROTECTION
SC-D	SANITARY SEWER
SC-E	CONTAINMENT SYSTEM

POTENTIAL RUNOFF POLLUTANTS:

A	TRASH & REFUSE STORAGE
B	MATERIALS & EQUIPMENT STORAGE
C	LOADING & UNLOADING
D	FUELING
E	MAINTENANCE & REPAIR
F	VEHICLE & EQUIPMENT CLEANING
G	OTHER

SHEET INDEX

Sheet No.	SHEET NAME
SP-1	SITE PLAN
A1	FLOOR PLAN
A2	ELECTRICAL PLAN
A3	ELEVATIONS - FRONT & BACK
A4	ELEVATIONS - RIGHT & LEFT
A5	ROOF PLAN / TRUSS LAYOUT
A6	SECTIONS
1	FOUNDATION PLAN
2	ROOF FRAMING
CS-1	MIN. CONSTRUCTION SPECIFICATIONS

GENERAL CODES

THIS PROJECT SHALL COMPLY WITH THE FOLLOWING BUILDING CODES AND ASSOCIATED COUNTY OF LOS ANGELES AMENDMENTS:

- **2022 CALIFORNIA RESIDENTIAL CODE**
- **2022 CALIFORNIA BUILDING CODE**
- **2022 CALIFORNIA GREEN BUILDING STANDARDS CODE**
- **2022 CALIFORNIA ELECTRICAL CODE**
- **2022 CALIFORNIA MECHANICAL CODE**
- **2022 CALIFORNIA PLUMBING CODE**
- **2022 CALIFORNIA FIRE CODE**
- **2022 CALIFORNIA BUILDING ENERGY EFFICIENCY STANDARDS**
- **2023 MUNICIPAL CODES**

DESIGN BASIS

CONVENTIONAL LIGHT FRAME CONSTRUCTION

DESIGN CRITERIA LIMITATIONS:
ROOF LIVE LOAD: 20 PSF
ROOF DEAD LOAD: 12 PSF
ULTIMATE WIND SPEED: 110 MPH
EXPOSURE CATEGORY: C
SITE CLASS: D
RISK CATEGORY: II
S_{DS}: 1.25
SEISMIC DESIGN CATEGORY: D_2
ALLOW SOIL VERTICAL BEARING PRESSURE: 1500 PSF
ALLOW SOIL LATERAL BEARING PRESSURE: 100 PSF/FT

FIRE SPRINKLER:	**YES OR NO**
OAK TREES:	**YES OR NO**
UTILITIES IN THE WAY OF CONSTRUCTION:	**YES OR NO**
SPECIFY:	
FEMA ZONE:	**YES OR NO**
VERY HIGH FIRE SEVERITY HAZARD ZONE:	**YES OR NO**

ENERGY EFFICIENCY SPECIAL FEATURES

SPECIFY AS INDICATED IN CF1R FORM (TITLE 24):

ENERGY EFFICIENCY HERS VERIFICATION

SPECIFY AS INDICATED IN CF1R FORM (TITLE 24):

PROPERLY COMPLETED AND SIGNED CERTIFICATES OF INSTALLATION (CF2R FORMS) SHALL BE PROVIDED TO THE INSPECTOR IN THE FIELD. FOR PROJECTS REQUIRING HERS VERIFICATION, THE CF2R FORMS SHALL BE REGISTERED WITH A CALIFORNIA-APPROVED HERS PROVIDER DATA REGISTRY." CF2R FORMS ARE AVAILABLE AT HTTP://WWW.SDCOUNTY.CA.GOV/PDS/BLDG/ENERGY-STDS.HTML. (CBEES 10-103)

PROPERLY COMPLETED CERTIFICATES OF VERIFICATION (CF3R FORMS) SHALL BE PROVIDED TO THE INSPECTOR IN THE FIELD FOR ITEMS REQUIRING HERS VERIFICATION. CF3R FORMS SHALL BE REGISTERED WITH A CALIFORNIA-APPROVED HERS PROVIDER DATA REGISTRY." CF3R FORMS ARE AVAILABLE AT HTTP://WWW.SDCOUNTY.CA.GOV/PDS/BLDG/ENERGY-STDS.HTML. (CBEES 10-103)

PROVIDE SOLAR PV SYSTEM UNDER SEPARATE PERMIT. SYSTEM SIZE TO COMPLY WITH ENERGY COMPLIANCE DOCUMENTATION

NO SLOPE EXCEEDING 33%
SHEET FLOW TOWARDS:
A-THE FRONT STREET
B-TOWARDS THE BACK PROPERTY
C-CROSS DRAINAGE

SPECIFY IF SUMP PUMP IS REQUIRED OR A BACK FLOW VALVE WILL BE REQUIRED
FOR THE SEWER LATERAL :YES OR NO

By using these standard plans, the user agrees to release the Los Angeles County from any and all claims, liabilities, suits, and demands on account of any injury, damage, or loss to persons or property, including injury or death, or economic losses, arising out of the use of these construction documents. The use of these plans does not eliminate or reduce the user's responsibility to verify any and all information.

2024 LOS ANGELES COUNTY ACCESSORY DWELLING UNIT ADU STANDARD PLAN "C" No. 27003 800 SQ.FT. ONE STORY

VICINITY MAP

OWNER INFORMATION

NAME:

ADDRESS:

PHONE:

EMAIL:

CONTACT INFORMATION

NAME:

ADDRESS:

PHONE:

EMAIL:

PROJECT INFORMATION

PROJECT SCOPE: PROPOSED 800 SF DETACHED ACCESSORY DWELLING UNIT ADU ☐

APN:

SITE ADDRESS:

PROPERTY CONNECTED TO THE ELECTRICAL GRID (Y or N)

PROPERTY SERVICED BY PROPANE (Y or N) IF YES, SHOW TANK ON PLOT PLAN

PROPERTY SERVICED BY NATURAL GAS (Y or N)

ENTIRE LOT IS FUEL MODIFIED (Y or N) IF NO, DIMENSION 100' FUEL MODIFICATION ZONE

All proposed buildings, structures, additions, modifications to buildings/structures must comply with the approved location, as shown on the County approved Plot Plan. At the discretion of the County, the property owner may be required to provide proof of current placement of each on the parcel. This may include a stamped and signed setback certificate prepared by a California licensed surveyor or civil engineer.

PERVIOUS AREA INFORMATION

PERVIOUS SURFACE AREA TABLE

SITE ID	PERVIOUS ITEM	DIMENSIONS	AREA (SF)	NOTES

PERVIOUS ELEMENT MANUFACTURER: _____

PERVIOUS ELEMENT SLOPE AND DIRECTION OF SLOPE: _____

MAINTENANCE PROGRAM: _____

PERVIOUS ELEMENT CROSS SECTION LOCATED ON SHEET: _____

CONSTRUCTED PERVIOUS SURFACES SHALL NOT BE SEALED.

IMPERVIOUS AREA INFORMATION

IMPERVIOUS SURFACE AREA TABLE

SITE ID	IMPERVIOUS ITEM	DIMENSIONS	NEW or REPLACED AREA (SF)	EXISTING AREA (SF)
1	PROPOSED DWELLING UNIT ADU ☐ SFD ☐	PER PLAN	835	
2				
3				
4				
TOTAL (SF)				

LAND DISTURBANCE: _____**SF**

SHEET TITLE

PLOT PLAN

SHEET NUMBER

SP

PDS 670 (REV. 10/01/2023)

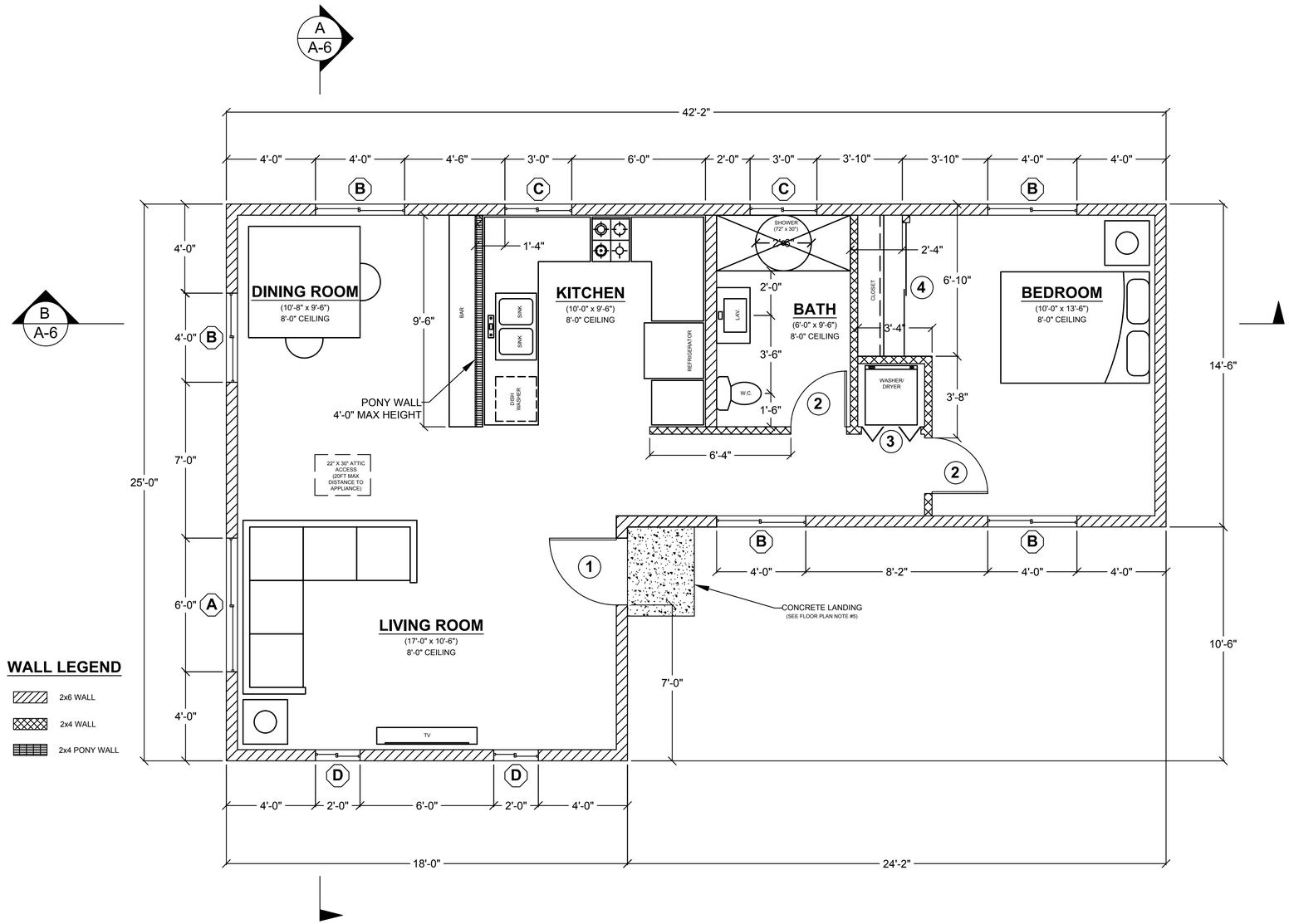

FLOOR PLAN NOTES

1. EXTERIOR WALLS WITHIN 3 FEET OF PROPERTY LINE (WITH SPRINKLERS) OR 5 FEET OF PROPERTY LINE (WITHOUT SPRINKLERS) REQUIRE 1–HOUR FIRE RATING FOR EXPOSURE TO BOTH SIDES.
2. PROJECTIONS:
   - PROHIBITED WITHIN 2 FEET OF PROPERTY LINE
   - 1–HOUR FIRE RATING ON THE UNDERSIDE WITHIN 3FT OF PROPERTY LINE (WITH SPRINKLERS)
   - 1–HOUR FIRE RATING ON THE UNDERSIDE WITHIN 5FT OF PROPERTY LINE (WITHOUT SPRINKLERS)
3. OPENINGS:
   - PROHIBITED WITHIN 3FT OF PROPERTY LINE
   - MAXIMUM 25% OF WALL AREA WITHIN 5 FEET OF PROPERTY LINE (WITHOUT SPRINKLERS)
4. PENETRATIONS:
   - 1–HOUR FIRE–RATED PENETRATIONS OF WALLS WITHIN 3FT OF PROPERTY LINE (WITH SPRINKLERS)
   - 1–HOUR FIRE–RATED PENETRATIONS OF WALLS WITHIN 5FT OF PROPERTY LINE (WITHOUT SPRINKLERS)
5. CONCRETE LANDING WITH MIN 36" DEPTH AND A MAXIMUM OF 1–½" LOWER THAN TOP OF DOOR THRESHOLD

OPTIONAL ROLL-IN SHOWER PLAN NOTES

1. SHOWER COMPARTMENT SEAT
   - MUST BE FOLDING TYPE, NOT TO EXCEED MORE THAN 6 INCHES FROM MOUNTING WALL WHEN FOLDED
   - LOCATED WITHIN 27 INCHES OF SHOWER CONTROLS
   - MOUNTED MINIMUM 17 INCHES AND MAXIMUM 19 INCHES ABOVE BATHROOM FINISHED FLOOR.
   - SEAT INSTALLED ON SIDE WALL ADJACENT TO CONTROLS AND EXTENDING FROM BACK WALL TO POINT WITHIN 3 INCHES OF SHOWER COMPARTMENT ENTRY
   - STRUCTURAL ADEQUACY OF MOUNTING HARDWARE AND FASTENERS TO ACCOMMODATE 250 POUND POINT LOAD APPLIED AT ANY POINT ON THE GRAB BAR, FASTENER, MOUNTING DEVICE, OR SUPPORTING STRUCTURE
2. SHOWER GRAB BARS
   - MOUNTED MINIMUM 33 INCHES AND MAXIMUM 36 INCHES ABOVE SHOWER FLOOR
   - NOT EXTENDING OVER SHOWER SEAT
   - IF CROSS SECTION IS CIRCULAR, MINIMUM 1–¼" AND MAXIMUM 2" OUTSIDE DIAMETER
   - IF CROSS SECTION IS NON–CIRCULAR, MINIMUM 4" AND MAXIMUM 4.8" PERIMETER AND MAXIMUM 2–¼" CROSS SECTION DIMENSION
   - GRAB BARS MOUNTED ADJACENT TO A WALL, 1–½" ABSOLUTE SPACE BETWEEN WALL AND GRAB BAR
   - MINIMUM 1–½" SPACE BETWEEN GRAB BAR AND PROJECTING OBJECTS BELOW AND AT ENDS
   - MINIMUM 12 INCH SPACE BETWEEN GRAB BAR AND PROJECTING OBJECTS ABOVE
   - SURFACE MATERIAL OF ANY WALLS OR OBJECTS ADJACENT TO GRAB BARS MUST BE FREE OF SHARP OR ABRASIVE ELEMENTS AND HAVE ROUNDED EDGES.
   - STRUCTURAL ADEQUACY OF MOUNTING HARDWARE AND FASTENERS TO ACCOMMODATE 250 POUND POINT LOAD APPLIED AT ANY POINT ON THE GRAB BAR, FASTENER, MOUNTING DEVICE, OR SUPPORTING STRUCTURE
   - WALL REINFORCEMENT TO BE PROVIDED AT LOCATION OF GRAB BARS (E.G. BLOCKING)
3. OPERABLE PARTS OF SHOWER CONTROLS AND FAUCETS:
   - INSTALLED ON BACK WALL OF SHOWER COMPARTMENT ADJACENT TO SEAT WALL
   - LOCATED MINIMUM 19 INCHES AND MAXIMUM 27 INCHES FROM SEAT WALL
   - LOCATED ABOVE GRAB BAR BUT NO HIGHER THAN 48 INCHES ABOVE SHOWER FLOOR
   - CENTERLINE AT MINIMUM 39 INCHES AND MAXIMUM 41 INCHES ABOVE SHOWER FLOOR
   - SINGLE–LEVER DESIGN
   - OPERABLE WITH MAXIMUM 5 POUNDS OF FORCE
   - OPERABLE WITH ONE HAND AND WITHOUT TIGHT GRASPING, PINCHING, OR TWISTING OF WRIST
   - ALL SHOWERS AND TUB–SHOWERS SHALL HAVE A PRESSURE BALANCE, THERMOSTATIC MIXING VALVE, OR A COMBINATION PRESSURE BALANCE/THERMOSTATIC MIXING TYPE VALVE. (PC 408.3)
4. SPRAYER UNIT AND ASSOCIATED OPERABLE PARTS SHALL BE PROVIDED PER THE FOLLOWING:
   - OPERABLE PARTS, INCLUDING HANDLE, TO BE INSTALLED ON BACK WALL OF SHOWER COMPARTMENT MINIMUM 19 INCHES AND MAXIMUM 27 INCHES FROM SEAT WALL
   - OPERABLE PARTS LOCATED ABOVE GRAB BAR BUT NO HIGHER THAN 48 INCHES ABOVE SHOWER FLOOR, MEASURED TO TOP OF MOUNTING BRACKET
   - MINIMUM 59 INCH LONG HOSE
   - CAPABLE FOR USE AS FIXED SHOWER HEAD AND HAND HELD SHOWER
   - ON/OFF CONTROL WITH NON–POSITIVE SHUT OFF
   - ADJUSTABLE –HEIGHT SHOWER HEADS ON VERTICAL BAR SHALL NOT OBSTRUCT USE OF BATHTUB GRAB BARS
5. WHERE SOAP DISHES ARE PROVIDED, MAXIMUM 40 INCHES ABOVE SHOWER FLOOR AND WITHIN REACH LIMITS FROM THE SHOWER SEAT
6. MAXIMUM 2.1% SLOPE IN ALL DIRECTIONS OF ROLL–IN SHOWER FLOORS
7. MAXIMUM ½" HIGH THRESHOLDS WITH MAXIMUM 50% BEVELED SLOPE AT ROLL–IN SHOWERS
8. WHERE DRAINS ARE PROVIDED AT ROLL–IN SHOWERS, MAXIMUM ¼" GRATE OPENINGS FLUSH WITH SHOWER FLOOR SURFACE

AGING-IN-PLACE AND FALL PREVENTION DESIGN

1. REINFORCEMENT FOR GRAB BARS: AT LEAST ONE BATHROOM ON THE ENTRY LEVEL SHALL BE PROVIDED WITH REINFORCEMENT INSTALLED IN ACCORDANCE WITH SECTION R327.1.1. REINFORCEMENT SHALL BE MINIMUM 2X8 SOLID LUMBER, LOCATED BETWEEN 32" AND 39–¼" ABOVE THE FINISHED FLOOR FLUSH WITH WALL FRAMING ON BOTH SIDE WALLS OF THE FIXTURE.
2. ELECTRICAL OUTLETS, SWITCH, AND CONTROL HEIGHTS SHALL BE LOCATED NO MORE THAN 48" MEASURED FROM THE TOP OF THE OUTLET BOX AND NOT LESS THAN 15" MEASURED FROM THE BOTTOM OF THE OUTLET BOX ABOVE THE FINISHED FLOOR (SECTION R327.1.2). SHOW DIMENSION ON ELEVATION.
3. DOORBELL BUTTONS SHALL NOT EXCEED 48" ABOVE EXTERIOR FLOOR OR LANDING. (SECTION R327.1.4). SHOW DIMENSION ON ELEVATION.
4. INTERIOR DOORS: EFFECTIVE JULY 1, 2024, AT LEAST ONE BATHROOM AND ONE BEDROOM ON THE ENTRY LEVEL SHALL PROVIDE A DOORWAY WITH A NET CLEAR OPENING OF NOT LESS THAN 32 INCHES, MEASURED WITH THE DOOR POSITIONED AT AN ANGLE OF 90 DEGREES FROM THE CLOSE POSITION; OR, IN THE CASE OF A TWO– OR THREE–STORY SINGLE FAMILY DWELLING, ON THE SECOND OR THIRD FLOOR OF THE DWELLING IF A BATHROOM OR BEDROOM IS NOT LOCATED ON THE ENTRY LEVEL.

WINDOW SCHEDULE

MARK	DIMENSION	TYPE	TEMPERED	NOTES
A	6'-0" x 4'-0"	SLIDING		
B	4'-0" x 4'-0"	SLIDING		
C	3'-0" x 2'-0"	SLIDING	Y	
D	2'-0" x 3'-0"	SLIDING		

EXTERIOR WINDOWS, EXTERIOR GLAZED DOORS, GLAZED OPENINGS WITHIN EXTERIOR DOORS, GLAZED OPENINGS WITHIN EXTERIOR GARAGE DOORS, AND EXTERIOR STRUCTURAL GLASS VENEER SHALL COMPLY WITH ONE OF THE FOLLOWING: (SELECT ONE)

A. MULTI-PANE GLAZING WITH A MINIMUM OF ONE TEMPERED PANE MEETING THE REQUIREMENTS OF SECTION 2406 SAFETY GLAZING, AND WHERE ANY GLAZING FRAMES MADE OF VINYL MATERIALS SHALL HAVE WELDED CORNERS, METAL REINFORCEMENT IN INTERLOCK AREA, AND BE CERTIFIED TO AAMA/WDMA/CSA 101/I.S.2/A40
B. MINIMUM 20-MIN FIRE-RESISTANCE-RATED.
C. MEET PERFORMANCE REQUIREMENTS OF SFM STANDARD 12-7A-2

DOOR SCHEDULE

MARK	DIMENSION	TYPE	TEMPERED	NOTES
1	3'-0" x 6'-8"	SWINGING		1-3/8" SOLID CORE
2	2'-8" x 6'-8"	SWINGING		
3		BI-FOLD		LAUNDRY ROOM
4	6'-0" x 6'-8"	SLIDING		6FT CLOSET

EXTERIOR DOORS SHALL COMPLY WITH ONE OF THE FOLLOWING: (SELECT ONE)

A. EXTERIOR SURFACE OR CLADDING OF NON-COMBUSTIBLE OR IGNITION-RESISTANT MATERIAL
B. SOLID CORE WOOD COMPLYING WITH THE FOLLOWING:
   - STILES AND RAILS MINIMUM 1-3/8 INCHES THICK
   - RAISED PANELS MINIMUM 1-1/4 INCHES THICK
   EXCEPTION: EXTERIOR PERIMETER OF RAISED PANEL MAY TAPER TO A TONGUE MINIMUM 3/8 INCHES THICK
C. MINIMUM 20-MIN FIRE RATED WHEN TESTED PER NFPA 252
D. MEET PERFORMANCE REQUIREMENTS OF SFM STANDARD 12-7A-1
E. DOOR MAY OPEN ON AN EXTERIOR LANDING, PROVIDED THE DOOR DOES NOT SWING OVER THE EXTERIOR LANDING AND THE LANDING IS NOT MORE THAN 7.75-in. BELOW THE TOP OF THE THRESHOLD. (R311.3.1 EX, R311.3.2)
F. REQUIRED EGRESS DOORS SHALL NOT SWING OVER A LANDING THAT IS MORE THAN 1.5-in. IN HEIGHT BELOW THE THRESHOLD (R311.3.1)

FLOOR PLAN
3/8" = 1'-0"

By using these standard plans, the user agrees to release the Los Angeles County from any and all claims, liabilities, suits, and demands on account of any injury, damage, or loss to persons or property, including injury or death, or economic losses, arising out of the use of these construction documents. The use of these plans does not eliminate or reduce the user's responsibility to verify any and all information.

2024 LOS ANGELES COUNTY ACCESSORY DWELLING UNIT ADU STANDARD PLAN "C" No. 27003 800 SQ.FT. ONE STORY

Public Works LOS ANGELES COUNTY

Sheet Number

A1

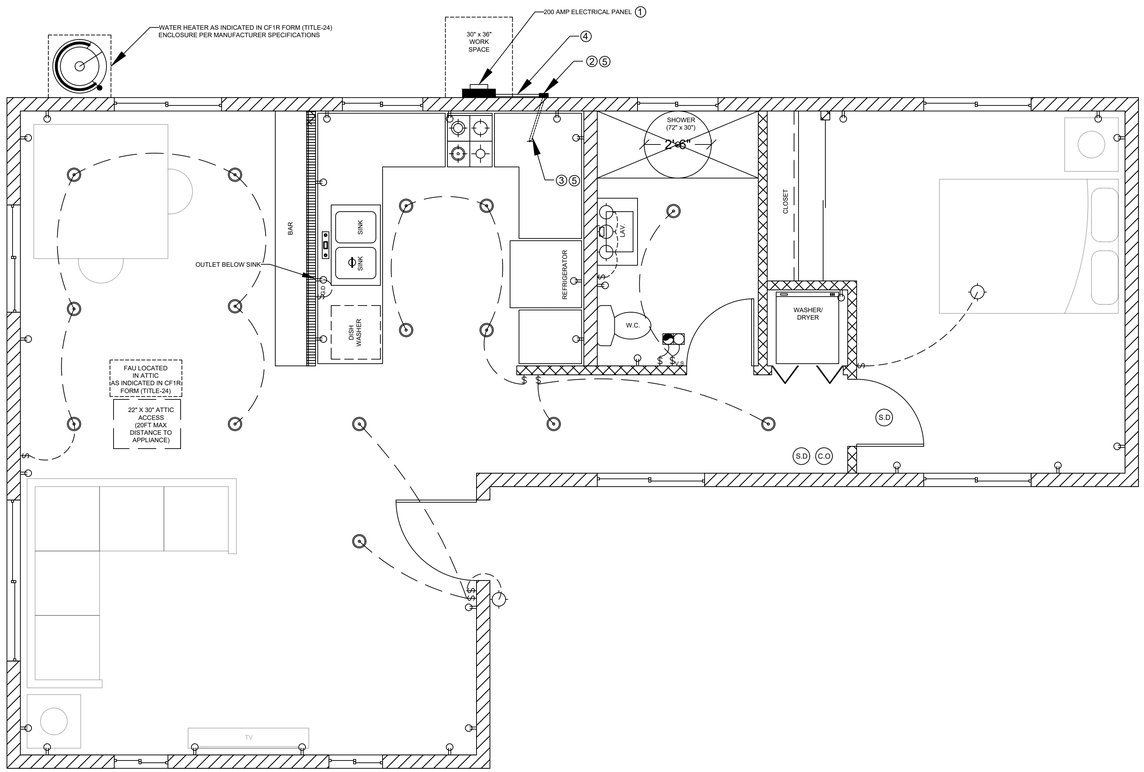

ELECTRICAL LEGEND

	DUPLEX OUTLET		HIGH EFFICACY RECESSED LIGHT
$	WALL SWITCH		GARBAGE DISPOSAL
$G.D	GARBAGE DISPOSAL SWITCH		
$V.S	VACANCY SENSOR		
	4" DIA DRYER VENT		
S.D	SMOKE DETECTOR		FAN & LIGHT COMBO
C.O	CARBON MONOXIDE ALARM		
	FAN AND LIGHT COMBINATION		
	HIGH EFFICACY LIGHT FIXTURE		

ELECTRICAL PLAN
3/8" = 1'-0"

GAS or PROPANE WATER HEATERS NOTES

SYSTEMS USING GAS OR PROPANE WATER HEATERS TO SERVE INDIVIDUAL DWELLING UNITS SHALL DESIGNATE A SPACE AT LEAST 2.5 FEET BY 2.5 FEET WIDE AND 7 FEET TALL SUITABLE FOR THE FUTURE INSTALLATION OF A HEAT PUMP WATER HEATER (HPWH) BY MEETING EITHER A OR B BELOW. ALL ELECTRICAL COMPONENTS SHALL BE INSTALLED IN ACCORDANCE WITH THE CALIFORNIA ELECTRICAL CODE:

1. IF THE DESIGNATED SPACE IS WITHIN 3 FEET FROM THE WATER HEATER, THEN THIS SPACE SHALL INCLUDE THE FOLLOWING:
   a. A DEDICATED 125-VOLT, 20-AMP ELECTRICAL RECEPTACLE THAT IS CONNECTED TO THE ELECTRIC PANEL WITH A 120/240-VOLT 3 CONDUCTOR, 10 AWG COPPER BRANCH CIRCUIT, WITHIN 3 FEET FROM THE WATER HEATER AND ACCESSIBLE TO THE WATER HEATER WITH NO OBSTRUCTIONS; AND
   b. BOTH ENDS OF THE UNUSED CONDUCTOR SHALL BE LABELED WITH THE WORD "SPARE" AND BE ELECTRICALLY ISOLATED; AND
   c. A RESERVED SINGLE POLE CIRCUIT BREAKER SPACE IN THE ELECTRICAL PANEL ADJACENT TO THE CIRCUIT BREAKER FOR THE BRANCH CIRCUIT IN A ABOVE AND LABELED WITH THE WORDS 'FUTURE 240V USE'.
   d. A CONDENSATE DRAIN THAT IS NO MORE THAN 2 INCHES HIGHER THAN THE BASE OF THE INSTALLED WATER HEATER AND ALLOWS NATURAL DRAINING WITHOUT PUMP ASSISTANCE.

2. IF THE DESIGNATED SPACE IS MORE THAN 3 FEET FROM THE WATER HEATER, THEN THIS SPACE SHALL INCLUDE THE FOLLOWING:
   a. A DEDICATED 240-VOLT BRANCH CIRCUIT SHALL BE INSTALLED WITHIN 3 FEET FROM THE DESIGNATED SPACE. THE BRANCH CIRCUIT SHALL BE RATED AT 30 AMPS MINIMUM. THE BLANK COVER SHALL BE IDENTIFIED AS "240V READY"; AND
   b. THE MAIN ELECTRICAL SERVICE PANEL SHALL HAVE A RESERVED SPACE TO ALLOW FOR THE INSTALLATION OF A DOUBLE POLE CIRCUIT BREAKER FOR A FUTURE HPWH INSTALLATION. THE RESERVED SPACE SHALL BE PERMANENTLY MARKED AS 'FOR FUTURE 240V USE'; AND
   c. EITHER A DEDICATED COLD-WATER SUPPLY, OR THE COLD-WATER SUPPLY SHALL PASS THROUGH THE DESIGNATED HPWH LOCATION JUST BEFORE REACHING THE GAS OR PROPANE WATER HEATER; AND
   d. THE HOT WATER SUPPLY PIPE COMING OUT OF THE GAS OR PROPANE WATER HEATER SHALL BE ROUTED FIRST THROUGH THE DESIGNATED HPWH LOCATION BEFORE SERVING ANY FIXTURES; AND
   e. THE HOT AND COLD-WATER PIPING AT THE DESIGNATED HPWH LOCATION SHALL BE EXPOSED AND READILY ACCESSIBLE FOR FUTURE INSTALLATION OF AN HPWH; AND
   f. A CONDENSATE DRAIN THAT IS NO MORE THAN 2 INCHES HIGHER THAN THE BASE OF THE INSTALLED WATER HEATER AND ALLOWS NATURAL DRAINING WITHOUT PUMP ASSISTANCE.

GAS or PROPANE HEAT PUMPS NOTES

SYSTEMS USING GAS OR PROPANE FURNACE TO SERVE INDIVIDUAL DWELLING UNITS SHALL INCLUDE THE FOLLOWING:

1. A DEDICATED 240-VOLT BRANCH CIRCUIT WIRING SHALL BE INSTALLED WITHIN 3 FEET FROM THE FURNACE AND ACCESSIBLE TO THE FURNACE WITH NO OBSTRUCTIONS. THE BRANCH CIRCUIT CONDUCTORS SHALL BE RATED AT 30 AMPS MINIMUM. THE BLANK COVER SHALL BE IDENTIFIED AS '240V READY.' ALL ELECTRICAL COMPONENTS SHALL BE INSTALLED IN ACCORDANCE WITH THE CALIFORNIA ELECTRICAL CODE.

2. THE MAIN ELECTRICAL SERVICE PANEL SHALL HAVE A RESERVED SPACE TO ALLOW FOR THE INSTALLATION OF A DOUBLE POLE CIRCUIT BREAKER FOR A FUTURE HEAT PUMP SPACE HEATER INSTALLATION. THE RESERVED SPACE SHALL BE PERMANENTLY MARKED AS 'FOR FUTURE 240V USE.'

GAS or PROPANE COOKTOPS NOTES

SYSTEMS USING GAS OR PROPANE COOKTOP TO SERVE INDIVIDUAL DWELLING UNITS SHALL INCLUDE THE FOLLOWING:

1. A DEDICATED 240-VOLT BRANCH CIRCUIT WIRING SHALL BE INSTALLED WITHIN 3 FEET FROM THE COOKTOP AND ACCESSIBLE TO THE COOKTOP WITH NO OBSTRUCTIONS. THE BRANCH CIRCUIT CONDUCTORS SHALL BE RATED AT 50 AMPS MINIMUM. THE BLANK COVER SHALL BE IDENTIFIED AS '240V READY.' ALL ELECTRICAL COMPONENTS SHALL BE INSTALLED IN ACCORDANCE WITH THE CALIFORNIA ELECTRICAL CODE.

2. THE MAIN ELECTRICAL SERVICE PANEL SHALL HAVE A RESERVED SPACE TO ALLOW FOR THE INSTALLATION OF A DOUBLE POLE CIRCUIT BREAKER FOR A FUTURE ELECTRIC COOKTOP INSTALLATION. THE RESERVED SPACE SHALL BE PERMANENTLY MARKED AS 'FOR FUTURE 240V USE.'"

GAS or PROPANE CLOTHES DRYERS NOTES

CLOTHES DRYER LOCATIONS WITH GAS OR PROPANE PLUMBING TO SERVE INDIVIDUAL DWELLING UNITS SHALL INCLUDE THE FOLLOWING:

1. A DEDICATED 240-VOLT BRANCH CIRCUIT WIRING SHALL BE INSTALLED WITHIN 3 FEET FROM THE CLOTHES DRYER LOCATION AND ACCESSIBLE TO THE CLOTHES DRYER LOCATION WITH NO OBSTRUCTIONS. THE BRANCH CIRCUIT CONDUCTORS SHALL BE RATED AT 30 AMPS MINIMUM. THE BLANK COVER SHALL BE IDENTIFIED AS '240V READY.' ALL ELECTRICAL COMPONENTS SHALL BE INSTALLED IN ACCORDANCE WITH THE CALIFORNIA ELECTRICAL CODE.

2. THE MAIN ELECTRICAL SERVICE PANEL SHALL HAVE A RESERVED SPACE TO ALLOW FOR THE INSTALLATION OF A DOUBLE POLE CIRCUIT BREAKER FOR A FUTURE ELECTRIC CLOTHES DRYER INSTALLATION. THE RESERVED SPACE SHALL BE PERMANENTLY MARKED AS 'FOR FUTURE 240V USE.'

SOLAR READY KEY NOTES

1. THE MAIN ELECTRICAL SERVICE PANEL SHALL NOT BE OF A TYPE WITH A CENTER-FED MAIN CIRCUIT BREAKER AND SHALL INCLUDE RESERVED SPACE ALLOWING FOR INSTALLATION OF DOUBLE-POLE CIRCUIT BREAKERS FOR A FUTURE SOLAR PHOTOVOLTAIC SYSTEM. SUCH RESERVED SPACE SHALL BE POSITIONED AT THE OPPOSITE (LOAD) END FROM THE INPUT FEEDER OR MAIN CIRCUIT BREAKER LOCATION. THE RESERVED SPACE SHALL BE PERMANENTLY AND VISIBLY MARKED AS "FOR FUTURE SOLAR PHOTOVOLTAIC"

2. APPROVED MINIMUM 4-INCH SQUARE ELECTRICAL JUNCTION BOX LOCATED WITHIN 72 INCHES HORIZONTALLY AND 12 INCHES VERTICALLY OF MAIN ELECTRICAL SERVICE PANEL

3. MINIMUM 1 INCH DIAMETER LISTED ELECTRICAL METALLIC RACEWAY ORIGINATING AT READILY ACCESSIBLE ATTIC LOCATION WITH PROXIMITY TO SOLAR ZONE AREA AND TERMINATING AT THE REQUIRED ELECTRICAL JUNCTION BOX

4. MINIMUM 1 INCH DIAMETER LISTED ELECTRICAL METALLIC RACEWAY ORIGINATING AT THE REQUIRED ELECTRICAL JUNCTION BOX AND TERMINATING AT THE MAIN ELECTRICAL SERVICE PANEL

5. ELECTRICAL JUNCTION BOX AND SEGMENT OF METALLIC RACEWAY IN THE ATTIC SHALL BE PERMANENTLY AND VISIBLY MARKED AS "FOR FUTURE SOLAR PHOTOVOLTAIC"

UTILITY PLAN NOTES

1. LOCAL EXHAUST FANS TO EXTERIOR TO PROVIDE MINIMUM 50 CFM INTERMITTENT OR 20 CFM CONTINUOUS VENTILATION.

2. SMOKE DETECTORS TO BE INTERCONNECTED PER CRC R314.4 AND HARD-WIRED WITH BATTERY BACK-UP PER CRC R314.6

3. CARBON MONOXIDE ALARMS TO BE INTERCONNECTED PER CRC R315.7 AND HARD-WIRED WITH BATTERY BACK-UP PER CRC R315.5

4. 4" ø DRYER VENT WITH MAXIMUM 14 FOOT COMBINED HORIZONTAL AND VERTICAL LENGTH WITH TWO 90 DEGREE ELBOWS.

5. A MECHANICAL EXHAUST VENTILATION SYSTEM, SUPPLY VENTILATION SYSTEM, OR COMBINATION THEREOF SHALL BE INSTALLED FOR EACH DWELLING UNIT TO PROVIDE WHOLE-BUILDING VENTILATION WITH OUTDOOR AIR IN COMPLIANCE WITH ASHRAE STANDARD 62.2 AS ADOPTED BY THE CALIFORNIA ENERGY COMMISSION.

6. AN INTERMITTENTLY OR CONTINUOUSLY OPERATING LOCAL MECHANICAL EXHAUST VENTILATION SYSTEM SHALL BE INSTALLED IN EACH BATHROOM WITH A BATHTUB, SHOWER, OR SIMILAR MOISTURE SOURCE AND IN EACH KITCHEN IN COMPLIANCE WITH ASHRAE STANDARD 62.2 AS ADOPTED BY THE CALIFORNIA ENERGY COMMISSION. INTERMITTENT LOCAL EXHAUST VENTILATION AIRFLOW RATES SHALL BE 50 CFM IN BATHROOMS AND 100 CFM IN KITCHENS. CONTINUOUS LOCAL EXHAUST VENTILATION AIRFLOW RATES SHALL BE 20 CFM IN BATHROOMS AND 5 AIR CHANGES PER HOUR IN KITCHENS BASED ON KITCHEN VOLUME.

7. WATER HEATER OR FURNACE SHALL BE A DIRECT-VENT APPLIANCE

8. LISTED GASKETED SELF-CLOSING DOOR REQUIRED FOR GAS FAU

LIGHTING PLAN NOTES

1. ALL LUMINARIES SHALL BE HIGH-EFFICACY IN ACCORDANCE WITH CBEES TABLE 150.0-A

2. ALL LED LUMINARIES AND LAMPS SHALL BE MARKED "JA8" AND LISTED IN THE CALIFORNIA ENERGY COMMISSION DATABASE AT:
HTTPS://CACERTAPPLIANCES.ENERGY.CA.GOV/PAGES/APPLIANCESEARCH.ASPX

3. ALL RECESSED DOWNLIGHT AND ENCLOSED LUMINARIES SHALL BE MARKED "JA8-E" AND LISTED IN THE CALIFORNIA ENERGY COMMISSION DATABASE AT:
HTTPS://CACERTAPPLIANCES.ENERGY.CA.GOV/PAGES/APPLIANCESEARCH.ASPX

4. RECESSED DOWNLIGHT LUMINARIES IN CEILINGS SHALL NOT BE SCREW-BASED

5. BATHROOMS, GARAGES, LAUNDRY ROOMS, AND UTILITY ROOMS: AT LEAST ONE LUMINARIES IN EACH SPACE SHALL BE CONTROLLED BY A VACANCY SENSOR

6. ALL LUMINARIES REQUIRING "JA8" OR "JA8-E" MARKING SHALL BE CONTROLLED BY A DIMMER OR VACANCY SENSOR
EXCEPTION: CLOSETS LESS THAN 70 S.F. & HALLWAYS

7. OUTDOOR LIGHTING PERMANENTLY MOUNTED TO BUILDINGS SHALL BE CONTROLLED BY ONE OF THE FOLLOWING:
   - PHOTOCONTROL AND MOTION SENSOR
   - PHOTOCONTROL AND AUTOMATIC TIME-SWITCH CONTROL
   - ASTRONOMICAL TIME CLOCK
   - ENERGY MANAGEMENT CONTROL SYSTEM PER CBEES 150.0(K)3AIIIC

ENERGY STORAGE SYSTEMS (ESS) NOTES

1. AT LEAST ONE OF THE FOLLOWING SHALL BE PROVIDED:
   a. ESS READY INTERCONNECTION EQUIPMENT WITH A MINIMUM BACKED-UP CAPACITY OF 60 AMPS AND A MINIMUM OF FOUR ESS-SUPPLIED BRANCH CIRCUITS, OR
   b. A DEDICATED RACEWAY FROM THE MAIN SERVICE TO A PANELBOARD (SUBPANEL) THAT SUPPLIES THE BRANCH CIRCUITS IN SECTION 150.0(S)(2). ALL BRANCH CIRCUITS ARE PERMITTED TO BE SUPPLIED BY THE MAIN SERVICE PANEL PRIOR TO THE INSTALLATION OF AN ESS. THE TRADE SIZE OF THE RACEWAY SHALL BE NOT LESS THAN ONE INCH. THE PANELBOARD THAT SUPPLIES THE BRANCH CIRCUITS (SUBPANEL) MUST BE LABELED "SUBPANEL SHALL INCLUDE ALL BACKED-UP LOAD CIRCUITS."

2. A MINIMUM OF FOUR BRANCH CIRCUITS SHALL BE IDENTIFIED AND HAVE THEIR SOURCE OF SUPPLY COLLOCATED AT A SINGLE PANELBOARD SUITABLE TO BE SUPPLIED BY THE ESS. AT LEAST ONE CIRCUIT SHALL SUPPLY THE REFRIGERATOR, ONE LIGHTING CIRCUIT SHALL BE LOCATED NEAR THE PRIMARY EGRESS, AND AT LEAST ONE CIRCUIT SHALL SUPPLY A SLEEPING ROOM RECEPTACLE OUTLET.

3. THE MAIN PANELBOARD SHALL HAVE A MINIMUM BUSBAR RATING OF 225 AMPS.

4. SUFFICIENT SPACE SHALL BE RESERVED TO ALLOW FUTURE INSTALLATION OF A SYSTEM ISOLATION EQUIPMENT/TRANSFER SWITCH WITHIN 3 FEET OF THE MAIN PANELBOARD. RACEWAYS SHALL BE INSTALLED BETWEEN THE PANELBOARD AND THE SYSTEM ISOLATION EQUIPMENT/TRANSFER SWITCH LOCATION TO ALLOW THE CONNECTION OF BACKUP POWER SOURCE.

NOTES

IN COMPLIANCE WITH THE 2023 COUNTY OF LOS ANGELES PLUMBING CODE, INDICATE THE FOLLOWING NOTES ON THE PLANS:

A- DUAL WASTE PIPING SHALL BE INSTALLED TO PERMIT THE DISCHARGE FROM CLOTH WASHERS, BATHTUBS, SHOWER, AND BATHROOM/RESTROOM WASH BASIN TO BE USED FOR A GRAYWATER IRRIGATION SYSTEM.
(PC 304.1)
EXCEPTIONS:
(1.) BUILDINGS WITH A GRAYWATER SYSTEM, RAIN CATCHMENTS SYSTEM OR RECYCLED WATER SYSTEM.
(2.) SITES WITH LANDSCAPE AREA NOT EXCEEDING 500 SQUARE FEET.
(3.) PROJECTS WHERE GRAYWATER SYSTEMS ARE NOT PERMITTED DUE TO GEOLOGICAL CONDITIONS.
(4.) ADDITIONS AND ALTERNATIONS THAT USE THE EXISTING BUILDING DRAIN.

B- A HOT WATER RECIRCULATION SYSTEM SHALL BE INSTALLED, AS DEFINED IN CHAPTER 2 OF LOS ANGELES COUNTY PLUMBING CODE AND SHALL NOT ALLOW MORE THAN 0.6 GALLONS OF WATER TO BE DELIVERED TO ANY FIXTURE BEFORE HOT WATER ARRIVES. HOT WATER RECIRCULATION SYSTEM MAY INCLUDE, BUT ARE NOT LIMITED TO, THE FOLLOWING:
(PC 601.2.2)
(1.) TIMER-INITIATED SYSTEMS.
(2.) TEMPERATURE SENSOR-INITIATED SYSTEMS.
(3.) OCCUPANCY SENSOR-INITIATED SYSTEMS.
(4.) SMART HOT WATER RECIRCULATION SYSTEMS.
(5.) DEMAND HOT WATER RECIRCULATION SYSTEMS.
(6.) OTHER SYSTEMS ACCEPTABLE TO THE AUTHORITY HAVING JURISDICTION.

AN INDIVIDUAL WATER METER OR SUBMETER SHALL BE PROVIDED FOR EACH DWELLING UNIT IN NEWLY CONSTRUCTED MULTI-UNIT RENTAL APARTMENT, CONDOMINIUM STRUCTURES AND IN RESIDENTIAL PORTION OF NEWLY CONSTRUCTED MIXED-USE STRUCTURES. (PC 601.2.1 & 601.2.1.1)

By using these standard plans, the user agrees to release the Los Angeles County from any and all claims, liabilities, suits, and demands on account of any injury, damage, or loss to persons or property, including injury or death, or economic losses, arising out of the use of these construction documents. The use of these plans does not eliminate or reduce the user's responsibility to verify any and all information.

2024 LOS ANGELES COUNTY ACCESSORY DWELLING UNIT ADU STANDARD PLAN "C" No. 27003 800 SQ.FT. ONE STORY

Public Works
LOS ANGELES COUNTY

Sheet Number

A2

Table 4.106.6(1) Low Rise Residential

Roof Slope	Minimum 3-Year Aged Solar Reflectance	Thermal Emit-tance	SRI
≤ 2:12	0.65	0.85	78
≥2:12	0.25	0.85	20

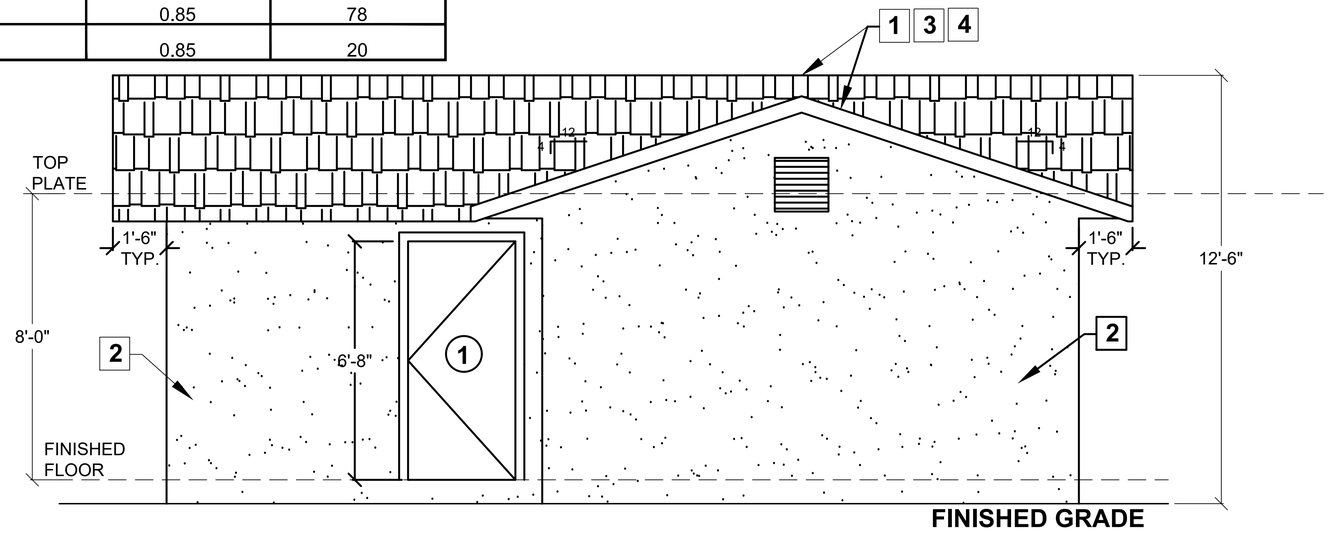

FRONT

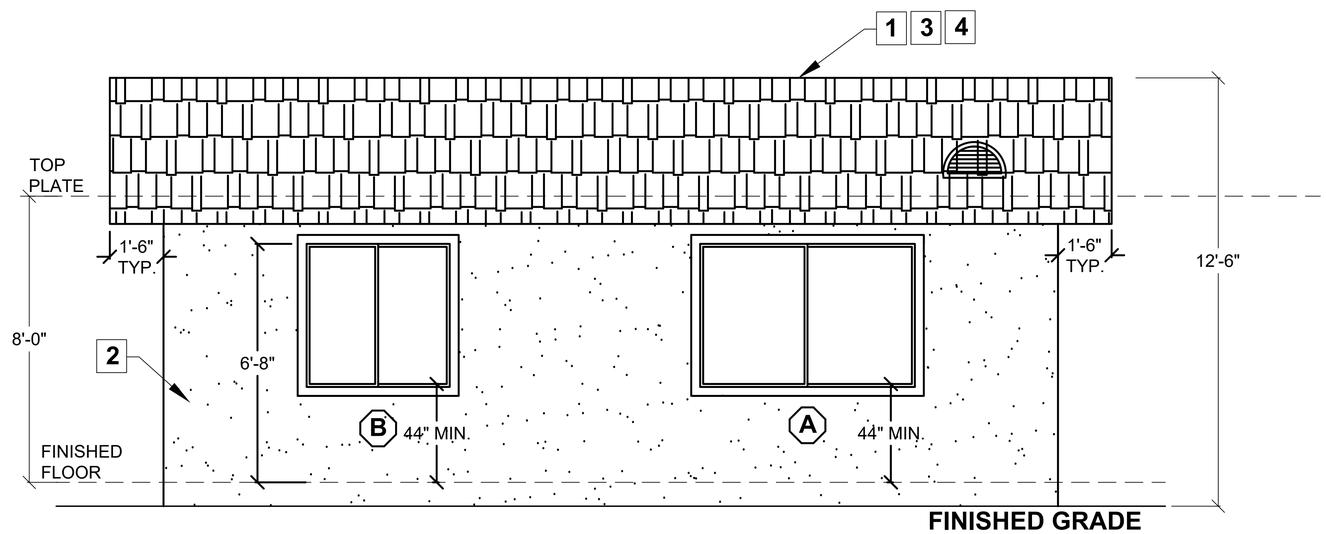

BACK

ELEVATIONS
1/2" = 1'-0"

ELEVATION KEY NOTES

1. ROOF: CLASS 'A' FIRE RATING
   ROOF MATERIAL: _____
   MANUFACTURER / MODEL: _____
   UNDERLAYMENT: _____
   LISTING REPORT #: _____
2. EXTERIOR WALL FINISH: _____ (SEE NOTE 7 BELOW)
3. ROOF PITCH: _____
4. RADIANT BARRIER IS REQUIRED YES ☐ NO ☐

WILDFIRE ZONE PLAN NOTES

By using these standard plans, the user agrees to release the Los Angeles County from any and all claims, liabilities, suits, and demands on account of any injury, damage, or loss to persons or property, including injury or death, or economic losses, arising out of the use of these construction documents. The use of these plans does not eliminate or reduce the user's responsibility to verify any and all information.

2024 LOS ANGELES COUNTY
ACCESSORY DWELLING UNIT
ADU STANDARD PLAN "C" No. 27003
800 SQ.FT. ONE STORY

Sheet Number

A3

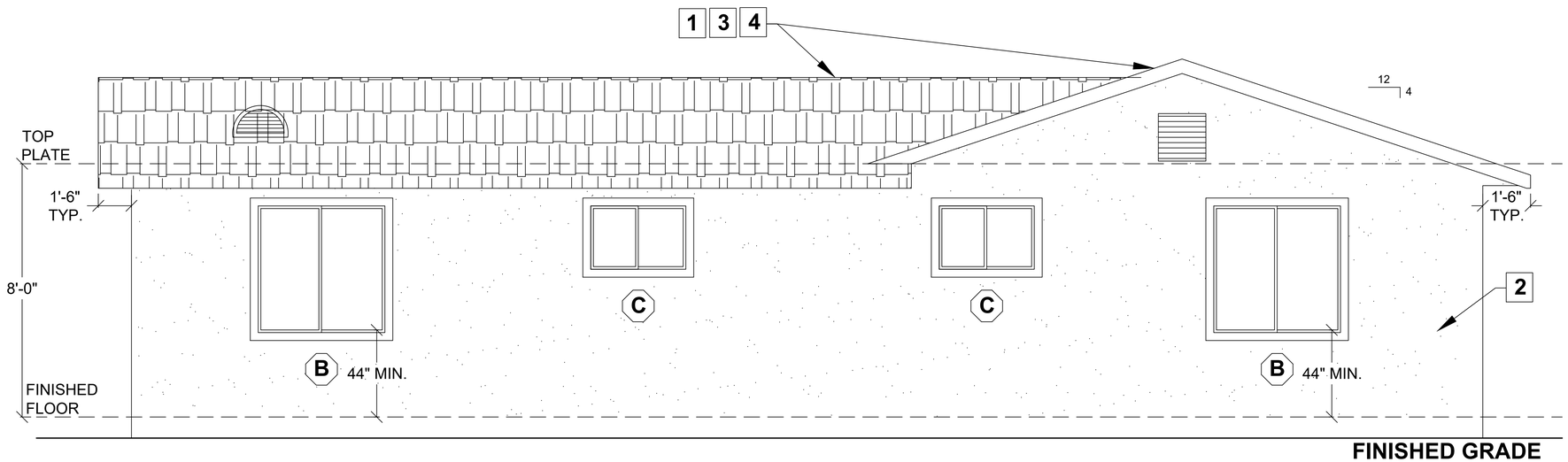

RIGHT

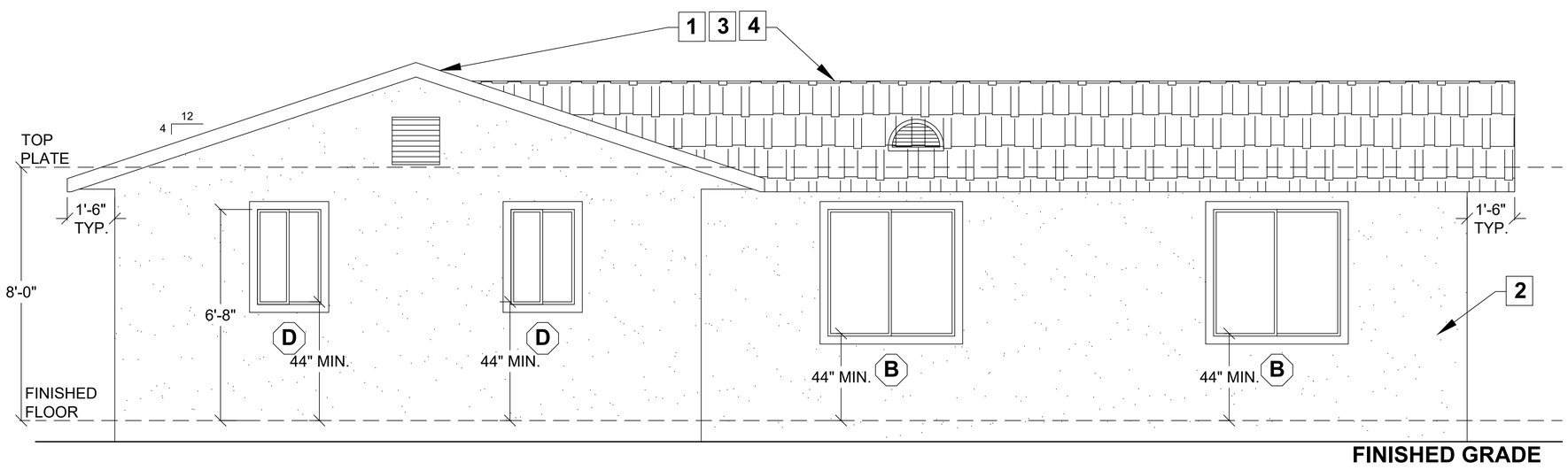

LEFT

ELEVATIONS
1/2" = 1'-0"

ELEVATION KEY NOTES

SEE SHEET A3 FOR KEYNOTES

EXTERIOR WALLS OF DWELLINGS AND ACCESSORY BUILDINGS LESS THAN 5–ft. (NON–SPRINKLERED) / 3–ft (SPRINKLERED) TO THE PROPERTY LINE SHALL BE 1–HOUR FIRE–RESISTANCE–RATED CONSTRUCTION. (R302.1, T–R302.1(1) & (2))

NO OPENINGS OTHER THAN APPROVED FOUNDATION VENTS SHALL BE PERMITTED IN THE EXTERIOR WALLS OF DWELLINGS AND ACCESSORY BUILDINGS WHERE THE EXTERIOR WALL IS LESS THAN 3–ft TO THE PROPERTY LINE. (R302.1, T–R302.1(1) & (2))

THE AREA OF EXTERIOR WALL OPENINGS OF NON–SPRINKLERED DWELLINGS AND ACCESSORY BUILDINGS LOCATED > 3–ft AND < 5–ft TO THE PROPERTY LINE SHALL BE LIMITED TO 25% OF THE WALL AREA. THE AREA OF EXTERIOR WALL OPENINGS IS UNLIMITED WHEN EXTERIOR WALL ARE LOCATED > 5–ft FOR NON–SPRINKLERED BUILDINGS AND > 3ft FOR SPRINKLERED BUILDINGS. (T–R302.1(1) & (2))

PROJECTIONS, INCLUDING EAVES, ARE NOT PERMITTED WITHIN 2–ft FROM THE PROPERTY LINE, EXCEPT DETACHED GARAGES ACCESSORY TO A DWELLING ARE PERMITTED TO HAVE 4–ft EAVE. PROJECTIONS LOCATED > 2–ft AND < 5–ft(NON–SPRINKLERED /3–ft(SPRINKLERED) TO THE PROPERTY SHALL BE OF AT LEAST 1–HOUR FIRE–RESISTANCE–RATED ON THE UNDERSIDE. (R302.1, T–302.1(1) & (2))

BUILDINGS ADJACENT TO ASCENDING OR DESCENDING SLOPES SHALL MAINTAIN SETBACK ACCORDING TO THE REQUIREMENTS OF SECTION R403.1.7. (SEE FIG. R403.1.7.1)

ATTIC VENTILATION

ATTIC VENTILATION REQUIRED
(SEE WILDFIRE NOTES 5 & 6 ON SHEET A3)

NET FREE CROSS VENTILATION AREA = $1/300$

VENT AREA REQUIRED = 800 ft^2 / 300 = 3 ft^2 x 144 = 432 in^2 = 432 in^2 TOTAL VENT AREA PROVIDED

1. GABLE VENT (MIN ONE VENT AT EACH GABLE END)
   MANUFACTURER: VULCAN
   MODEL: RECTANGULAR VENT
   QTY: 3 NFVA: 54 in^2
   VENT AREA PROVIDED = QTY x NFVA = 162 in^2
2. EAVE VENT
   MANUFACTURER: N/A
   MODEL: N/A
   QTY: N/A NFVA: N/A
   VENT AREA PROVIDED = QTY x NFVA = N/A in^2
3. ROOF VENT
   MANUFACTURER: VULCAN
   MODEL: DORMER
   QTY: 3 NFVA: 90 in^2
   VENT AREA PROVIDED = QTY x NFVA = 270 in^2
4. INSTALL BETWEEN 40% AND 50% OF THE REQUIRED NET FREE VENT AREA A MAXIMUM OF 3 FEET BELOW THE RIDGE OR THE HIGHEST POINT OF THE SPACE (MEASURED VERTICALLY), AND INSTALL THE BALANCE OF THE REQUIRED VENTILATION IN THE BOTTOM ONE–THIRD OF THE ATTIC SPACE.

By using these standard plans, the user agrees to release the Los Angeles County from any and all claims, liabilities, suits, and demands on account of any injury, damage, or loss to persons or property, including injury or death, or economic losses, arising out of the use of these construction documents. The use of these plans does not eliminate or reduce the user's responsibility to verify any and all information.

2024 LOS ANGELES COUNTY
ACCESSORY DWELLING UNIT
ADU STANDARD PLAN "C" No. 27003
800 SQ.FT. ONE STORY

Public Works
LOS ANGELES COUNTY

Sheet Number

A4

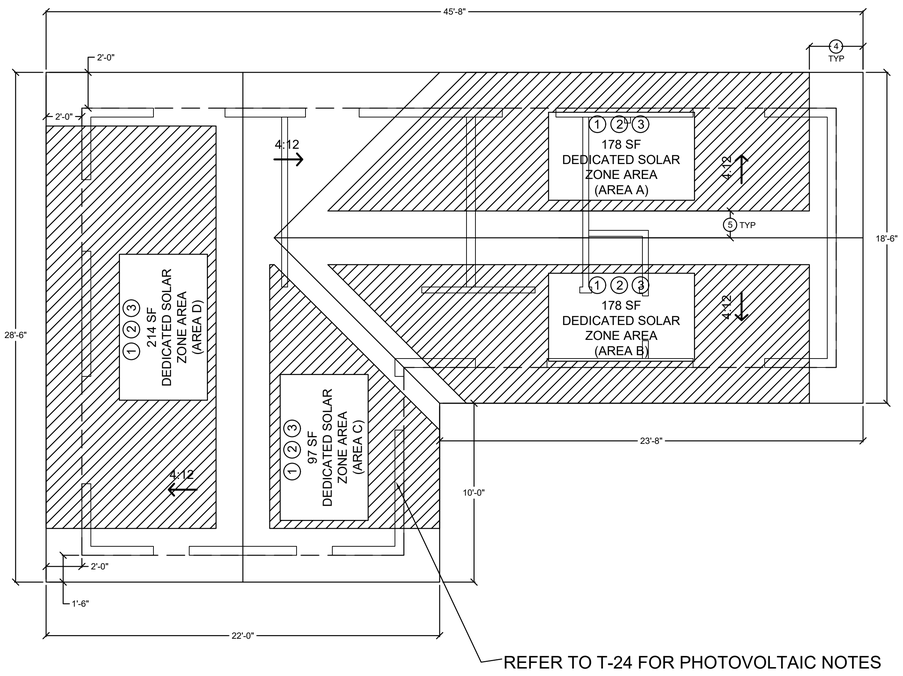

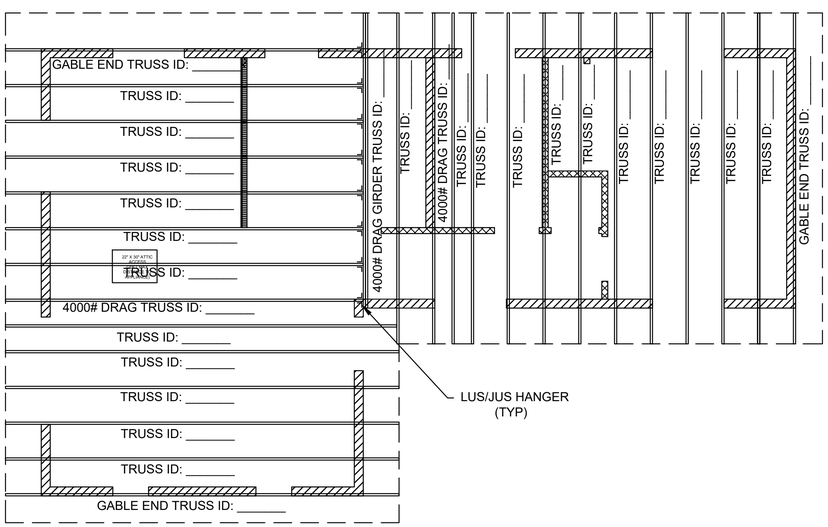

ROOF PLAN / TRUSS LAYOUT
1/4" = 1'-0"

SPECIFY
SOLAR READY CONFIGURATION

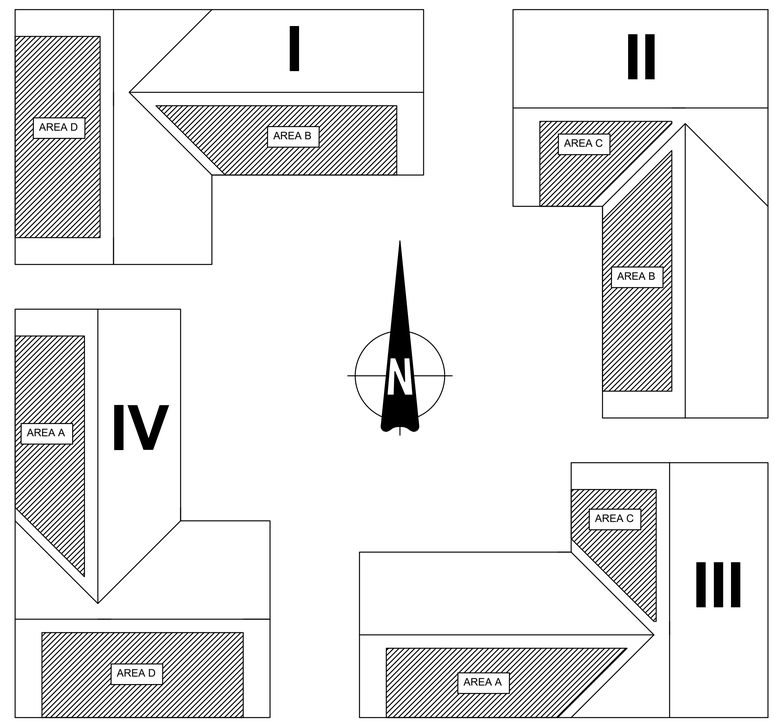

SOLAR READY KEY NOTES

WHEN PV SYSTEM NOT REQUIRED PER ENERGY COMPLIANCE DOCUMENTATION OR OTHERWISE EXEMPTED:

1. MIN 250 S.F. SOLAR ZONE AREA
2. DEDICATED SOLAR ZONE AREA LOCATED BETWEEN 110 AND 270 DEGREES OF TRUE NORTH – USE AREA A OR B AS NEEDED.
3. NO OBSTRUCTIONS – INCLUDING VENTS, CHIMNEYS, SKYLIGHTS, ARCHITECTURAL FEATURES, ROOF–MOUNTED EQUIPMENT – LOCATED WITHIN SOLAR ZONE.
4. 3' MIN FIRE FIGHTER ACCESS
5. 3' SMOKE VENTILATION SETBACK AT RIDGES
6. TILT CANNOT EXCEED 7:12 SLOPE

STRUCTURAL DESIGN OF THE ENGINEERED TRUSS SHALL BE PROVIDED TO THE BUILDING DEPARTMENT INSPECTOR DURING CONSTRUCTION.

By using these standard plans, the user agrees to release the Los Angeles County from any and all claims, liabilities, suits, and demands on account of any injury, damage, or loss to persons or property, including injury or death, or economic losses, arising out of the use of these construction documents. The use of these plans does not eliminate or reduce the user's responsibility to verify any and all information.

2024 LOS ANGELES COUNTY
ACCESSORY DWELLING UNIT
ADU STANDARD PLAN "C" No. 27003
800 SQ.FT. ONE STORY

Public Works
LOS ANGELES COUNTY

Sheet Number

A5

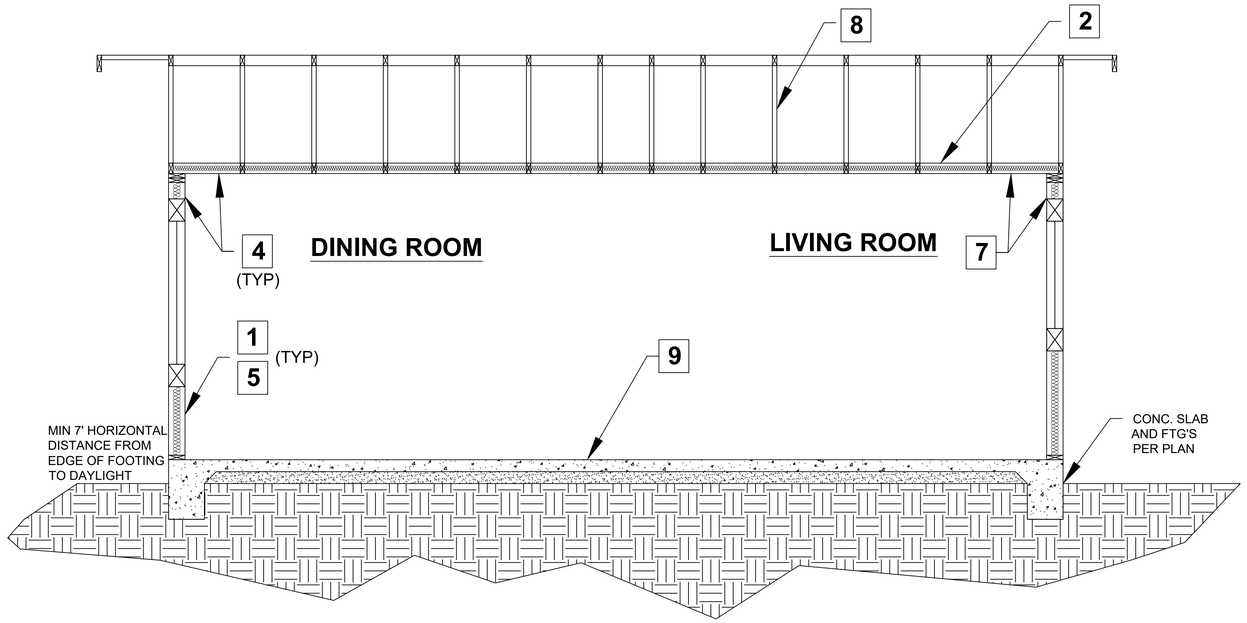

SECTION A-A

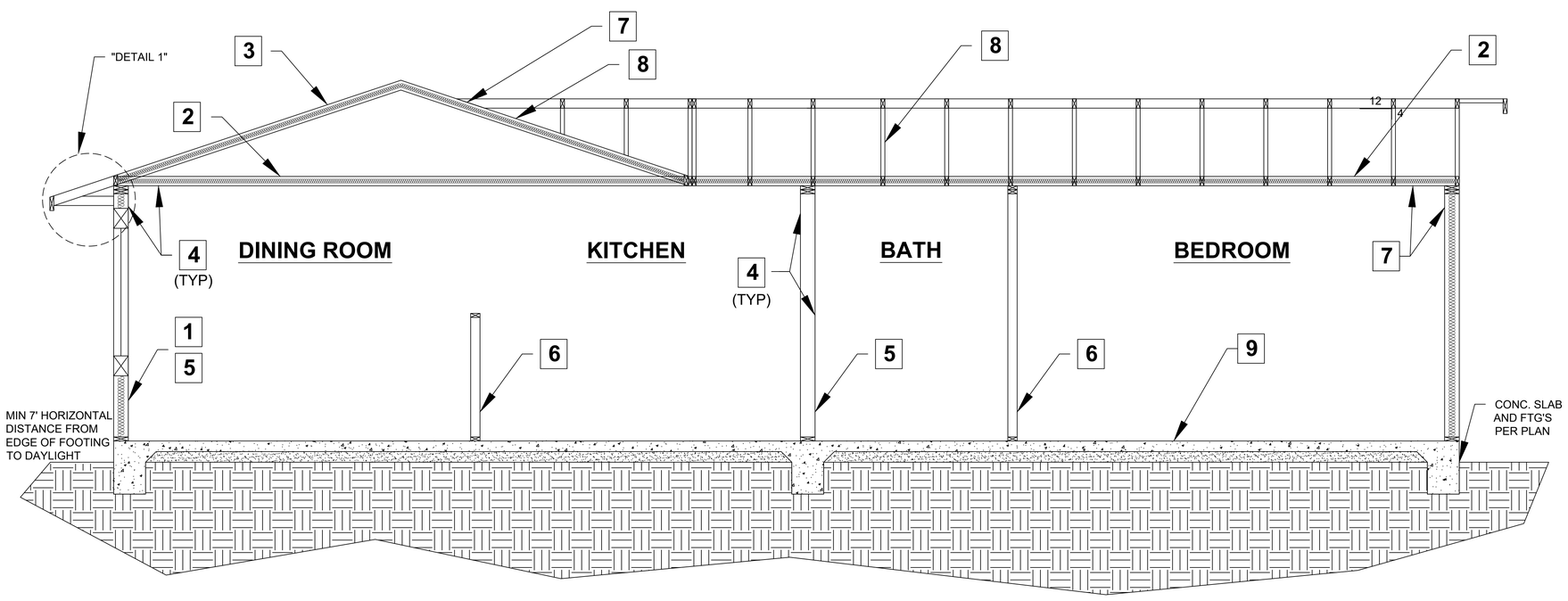

SECTION B-B

SECTIONS
1/2" = 1'-0"

SECTION KEY NOTES

1. WALL INSULATION: _____
2. CEILING INSULATION: _____
3. ROOF (TOP CHORD) INSULATION: _____
4. INTERIOR FINISH: ½" GYPSUM BOARD
5. EXTERIOR WALL/PLUMBING WALL: 2X6 STUD WALL
6. INTERIOR WALL: 2X4 STUD WALL
7. CLIMATE ZONE 14 PROJECT (Y or N) if yes, see below:

   A CLASS I OR II VAPOR RETARDER SHALL BE INSTALLED ON THE CONDITIONED SPACE SIDE OF ALL INSULATION IN ALL EXTERIOR WALLS AND VENTED ATTICS
8. MANUFACTURED TRUSSES
9. SLAB ON GRADE: 4" SLAB ON GRADE REINFORCED WITH #4 @ 16" O.C. EACH WAY ON TOP OF TWO LAYERS OF 2-INCH SANDFILL WITH A MOISTURE BARRIER BETWEEN THEM
10. SATURATE SOIL 18-INCH DEEP PRIOR TO POURING SLAB

1 IGNITION-RESISTANT EAVE

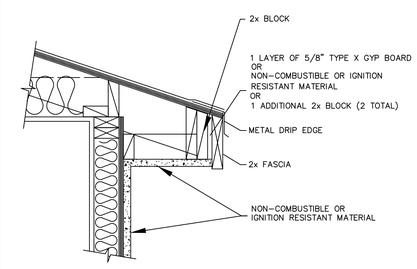

By using these standard plans, the user agrees to release the Los Angeles County from any and all claims, liabilities, suits, and demands on account of any injury, damage, or loss to persons or property, including injury or death, or economic losses, arising out of the use of these construction documents. The use of these plans does not eliminate or reduce the user's responsibility to verify any and all information.

2024 LOS ANGELES COUNTY
ACCESSORY DWELLING UNIT
ADU STANDARD PLAN "C" No. 27003
800 SQ.FT. ONE STORY

Public Works
LOS ANGELES COUNTY

Sheet Number

A6

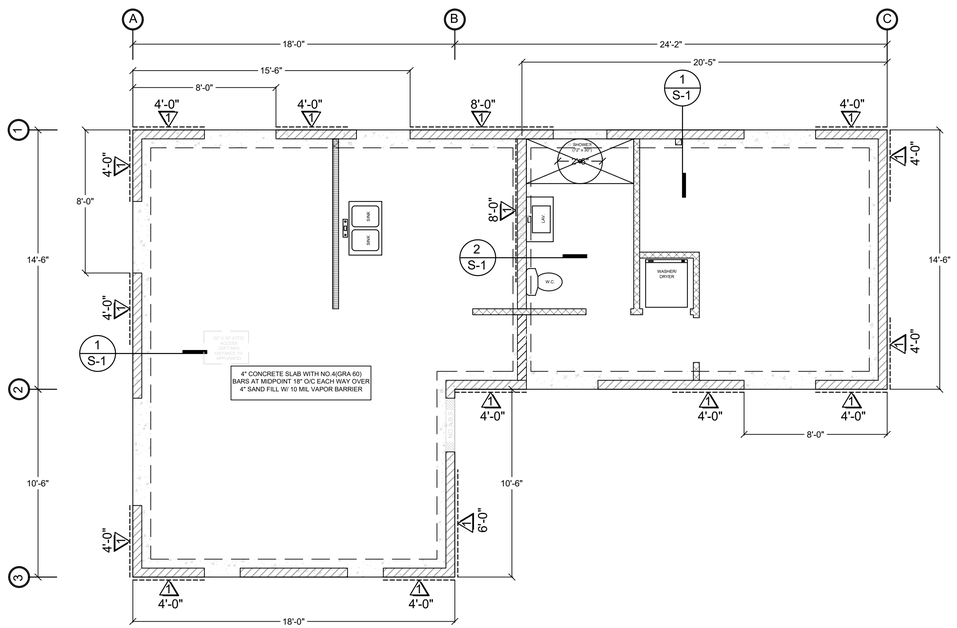

FOUNDATION PLAN
1/4" = 1'-0"

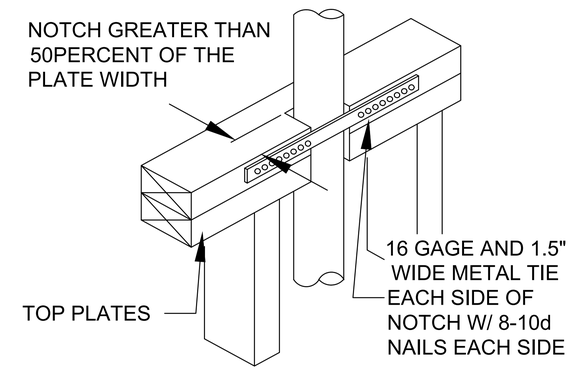

DRILLING & NOTCHING OF TOP PLATE (R602.6.1)

NOTE: WALLS USED TO ATTCH PLUMBING EQUIPMENT OR ACCESSORIES REQUIRE 2X6 STUDS.

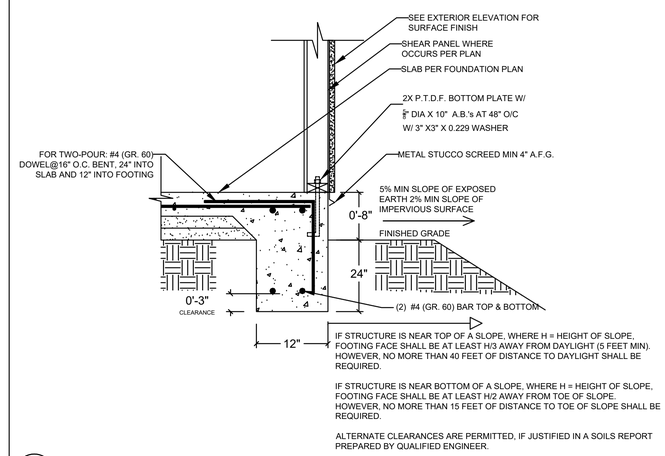

1 EXTERIOR FOOTING

By using these standard plans, the user agrees to release the Los Angeles County from any and all claims, liabilities, suits, and demands on account of any injury, damage, or loss to persons or property, including injury or death, or economic losses, arising out of the use of these construction documents. The use of these plans does not eliminate or reduce the user's responsibility to verify any and all information.

FOUNDATION PLAN NOTES

1. ALL ANCHORS BOLTS SHALL BE 5/8" DIAMETER AND HAVE A MINIMUM EMBEDMENT OF 7 INCHES INTO CONCRETE (UNO) AND NOT SPACED MORE THAN 48" APART
2. 3"X3"X0.229" PLATE WASHERS SHALL BE USED ON EACH SILL PLATE ANCHOR BOLT
3. FOR STANDARD CUT WASHERS PLACED BETWEEN PLATE WASHER AND NUT, HOLE IN PLATE WASHER MAY BE DIAGONALLY SLOTTED WITH MAXIMUM 3/16" LARGER WIDTH THAN BOLT DIAMETER AND MAXIMUM 1-3/4" SLOT LENGTH
4. PROVIDE A MINIMUM OF TWO ANCHOR BOLTS PER SILL PLATE WITH ONE BOLT LOCATED MAXIMUM 12" AND MINIMUM 7 BOLT DIAMETERS FROM EACH END OF EACH SECTION.
5. BOLTS LOCATED IN THE MIDDLE THIRD OF THE SILL PLATE WIDTH
6. FASTENERS FOR PRESSURE-PRESERVATIVE TREATED AND FIRE RETARDANT TREATED WOOD SHALL BE HOT-DIPPED ZINC COATED GALVANIZED, STAINLESS STEEL OR COPPER
7. NO LPG PIPING ASSEMBLIES ALLOWED IN OR BENEATH SLABS WITHIN THE STRUCTURE
8. HOLD-DOWN CONNECTOR BOLTS INTO WOOD FRAMING REQUIRE 0.229-IN X 3-IN. PLATE WASHERS ON THE POST OPPOSITE THE HOLD-DOWN
9. HOLD-DOWNS SHALL BE TIGHTENED TO FINGER TIGHT PLUS ONE-HALF WRENCH TURN JUST PRIOR TO COVERING THE WALL FRAMING.

CONTINUOUS FOOTINGS UNDER EXTERIOR WALLS AND INTERIOR BEARING WALLS EXTENDING BELOW GRADE 24-in. AND 18-in. RESPECTIVELY AND BELOW FOUNDATION WALL CRAWL HOLE. PILES OR PIERS ARE PERMITTED WITHOUT INTERCONNECTED GRADE BEAMS TO SUPPORT FIRST FLOOR LOADS ONLY. PAD FOOTING LOCATED UNDER A REINFORCED SLAB WITHIN THE CONFINES OF A PERIMETER FOOTING NEED NOT BE CONNECTED BY A GRADE BEAM.
FOUR CONTINUOUS #4 BARS, TWO 4-in. FROM BOTTOM AND TWO 4-in. FROM TOP OF FOUNDATION.
FLOOR SLAB 4-in. THICK OVER TWO LAYERS OF A 2-in. FILL OF SAND AND A MOISTURE BARRIER MEMBRANE (10 MILS THICK) SANDWICHED BETWEEN THE TWO LAYERS OF FILL AND REINFORCED WITH #4 BARS AT 16-in. O.C. EACH WAY. REINFORCEMENT TO BE PLACED AT CENTER OF SLAB.
SATURATE THE SOIL 18-in. DEEP BEFORE PLACING THE CONCRETE SLAB.
PROVIDE #4 DOWELS AT 16-in. O.C. BENT 2-ft. INTO SLAB AND 1-ft. INTO FOOTING. DOWELS MAY BE OMITTED WHEN SLAB IS "MONOPOUR" OR DESIGNED AS AN INDEPENDENT "FLOATING SLAB"

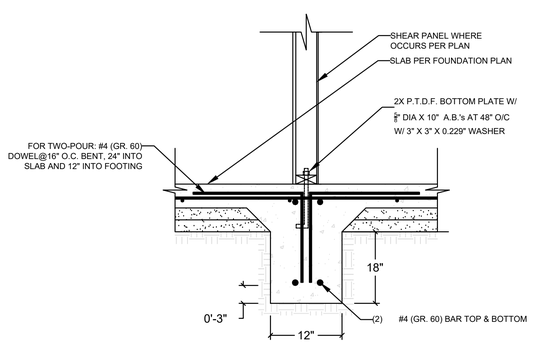

2 INTERIOR FOOTING

WOOD STRUCTURAL PANEL SHEATHING

MARK	8d COMMON , 2 1/2 X 0.131"		MINIMUM WOOD STRUCTURAL PANEL SPAN RATING	MINIMUM NOMINAL PANEL THICKNESS (in)	MAXIMUM WALL STUD SPACING (in)	PANEL NAIL SPACING	
	SIZE	PENETRATION (in)				EDGES (inches o/c)	FIELD (inches o/c)
	8D COMMON	1.75	24:16	15/32"	16	6	12

WOOD STRUCTURAL PANELS SHALL CONFORM TO DOC PS 1, DOC PS 2 OR ANSI/APA PRP 210, CSA O437 OR CSA O325. PANELS SHALL BE IDENTIFIED BY A GRADE MARK OR CERTIFICATE OF INSPECTION ISSUED BY AN APPROVED AGENCY

VERTICAL JOINTS OF PANEL SHEATHING SHALL OCCUR OVER AND BE FASTENED TO COMMON STUDS.
HORIZONTAL JOINTS IN BRACED WALL PANELS SHALL OCCUR OVER AND BE FASTENED TO COMMON BLOCKING OF A MINIMUM 1 1/2 INCH THICKNESS.

2024 LOS ANGELES COUNTY ACCESSORY DWELLING UNIT ADU STANDARD PLAN "C" No. 27003 800 SQ.FT. ONE STORY

Public Works LOS ANGELES COUNTY

Sheet Number

S1

TRUSSES SHALL BE A DEFERRED SUBMITAL

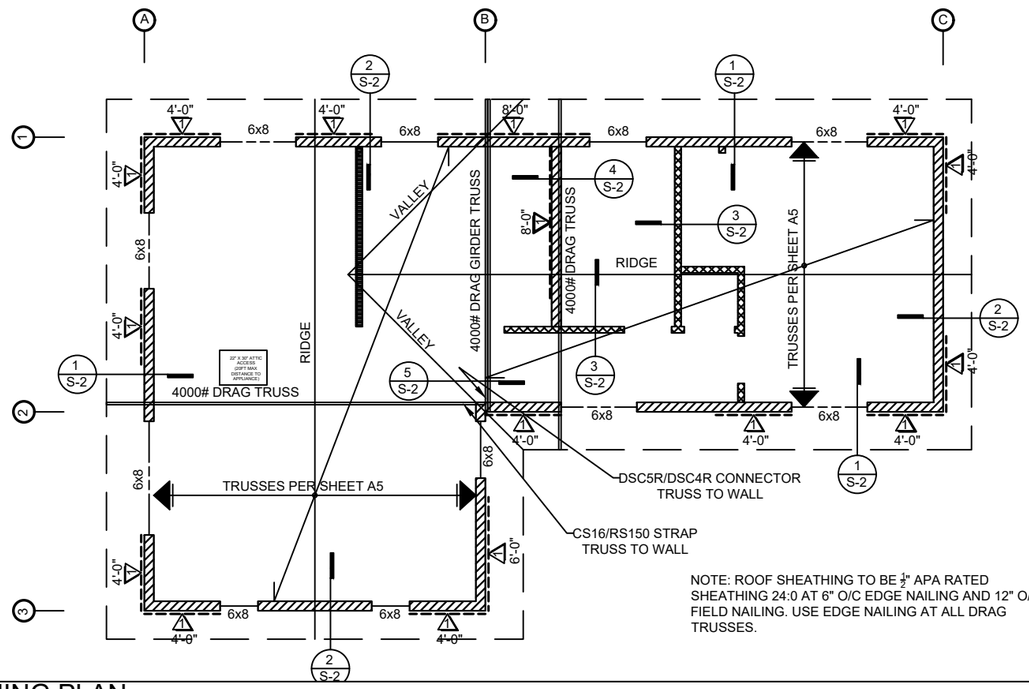

NOTE: ROOF SHEATHING TO BE ½" APA RATED SHEATHING 24:0 AT 6" O/C EDGE NAILING AND 12" O/C FIELD NAILING. USE EDGE NAILING AT ALL DRAG TRUSSES.

ROOF FRAMING PLAN
1/8" = 1'-0"

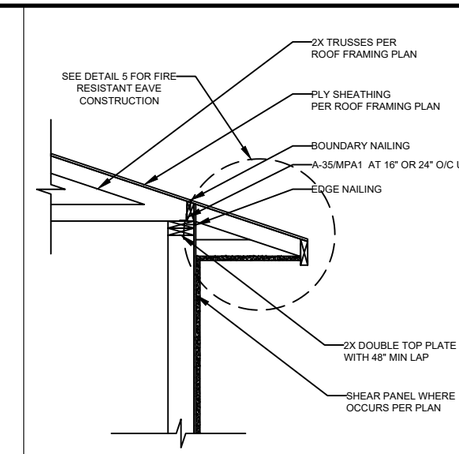

1 EAVE (SHEAR TRANSFER)

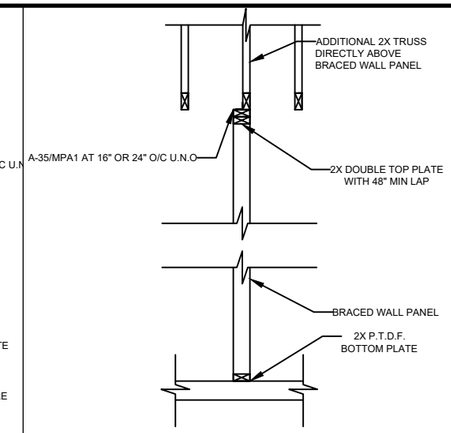

4 BRACED WALL PANEL PARALLEL TO CEILING FRAMING

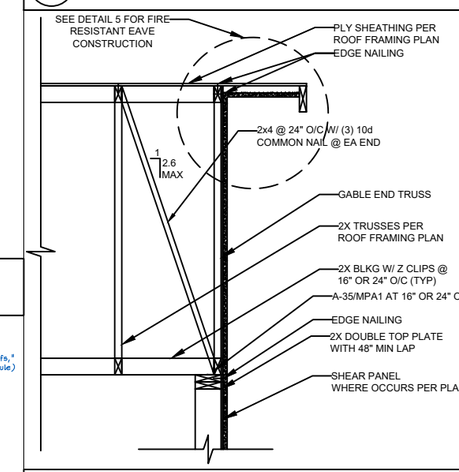

2 GABLE-END (SHEAR TRANSFER)

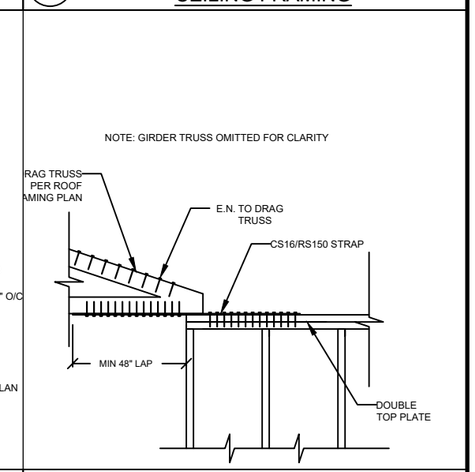

5 DRAG TRUSS CONNECTION

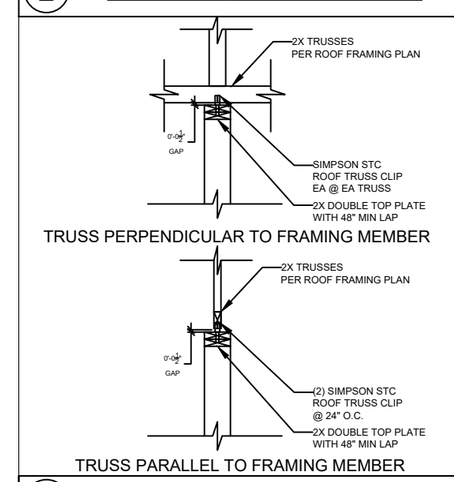

3 NON-BEARING WALL

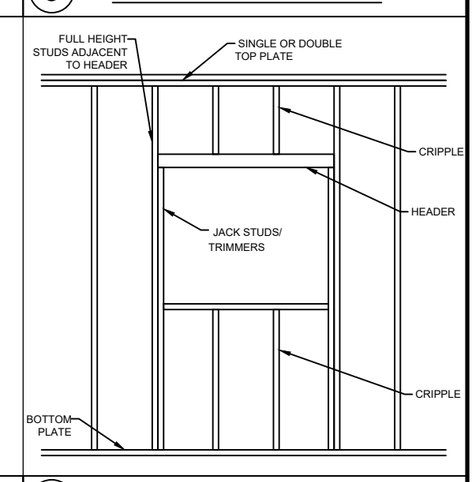

6 TYPICAL FRAMING AT OPENING

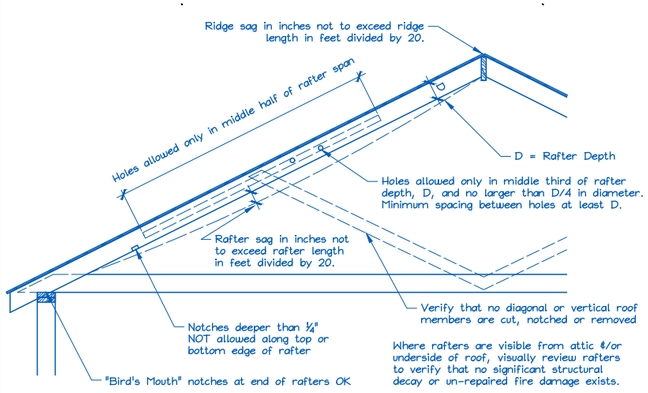

Figure 1. Roof Visual Structural Review (Contractor's Site Audit) of Existing Conditions.
The site auditor should verify the following:

1. No visually apparent disallowed rafter holes, notches and truss modifications as shown above.
2. Roof sag, measured in inches, is not more than the rafter or ridge beam length in feet divided by 20.

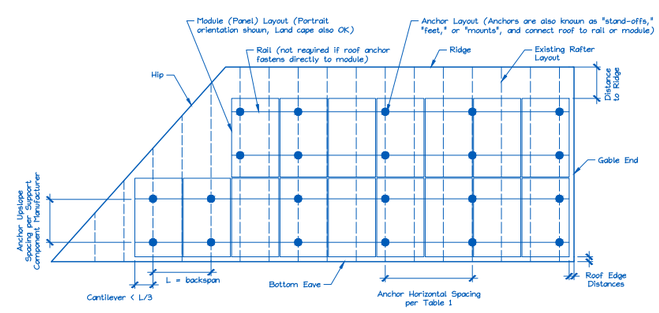

Figure 2. Sample Solar Panel Array and Anchor Layout Diagram (Roof Plan).

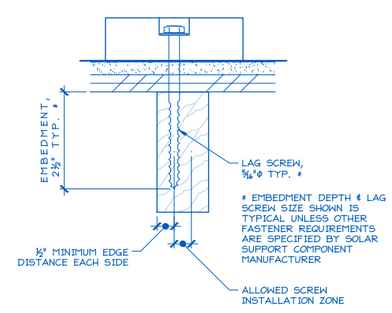

Figure 3. Typical Anchor with Lag Screw Attachment.

By using these standard plans, the user agrees to release the Los Angeles County from any and all claims, liabilities, suits, and demands on account of any injury, damage, or loss to persons or property, including injury or death, or economic losses, arising out of the use of these construction documents. The use of these plans does not eliminate or reduce the user's responsibility to verify any and all information.

2024 LOS ANGELES COUNTY
ACCESSORY DWELLING UNIT
ADU STANDARD PLAN "C" No. 27003
800 SQ.FT. ONE STORY

Public Works
LOS ANGELES COUNTY

Sheet Number

S2