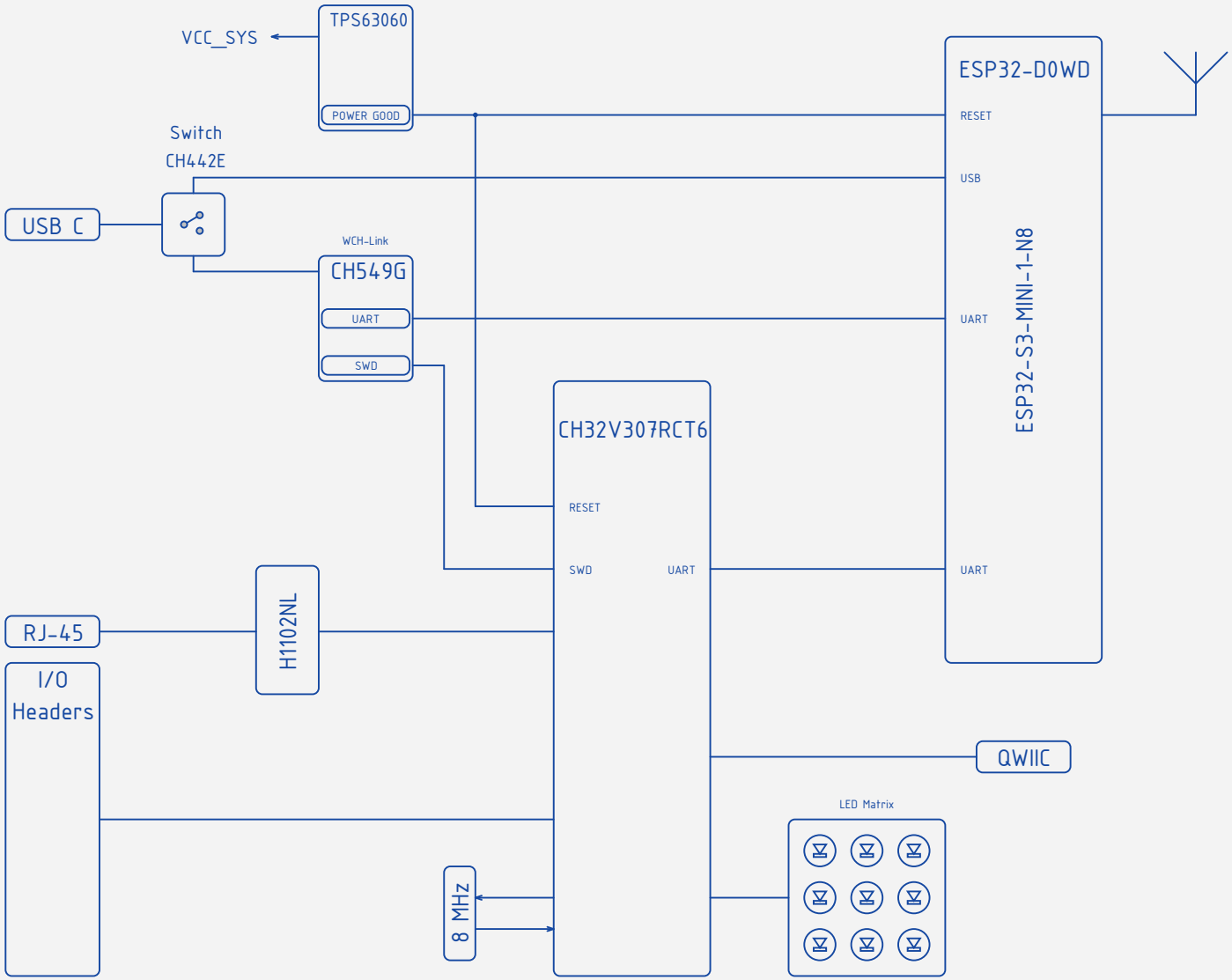

druINO-UNO

A4

Rev. A
9/22/2023

view on
GitHub

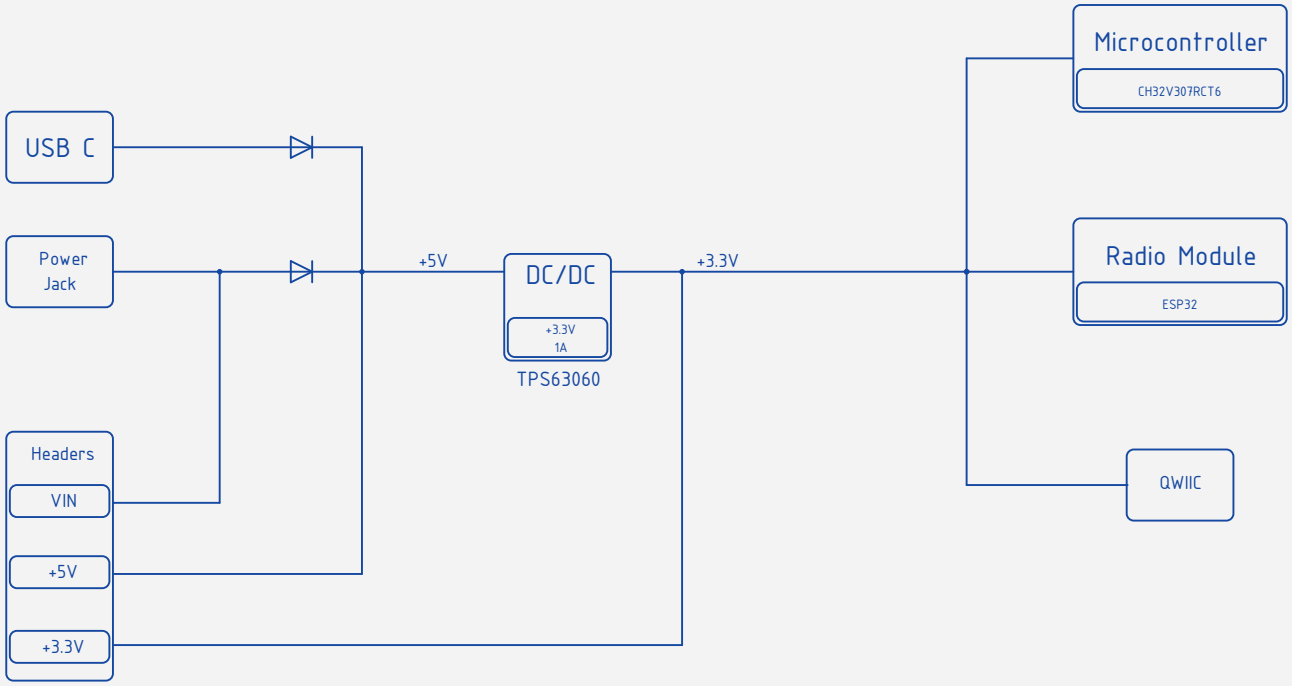

druINO-UNO

A4

Rev. A
9/22/2023

view on GitHub

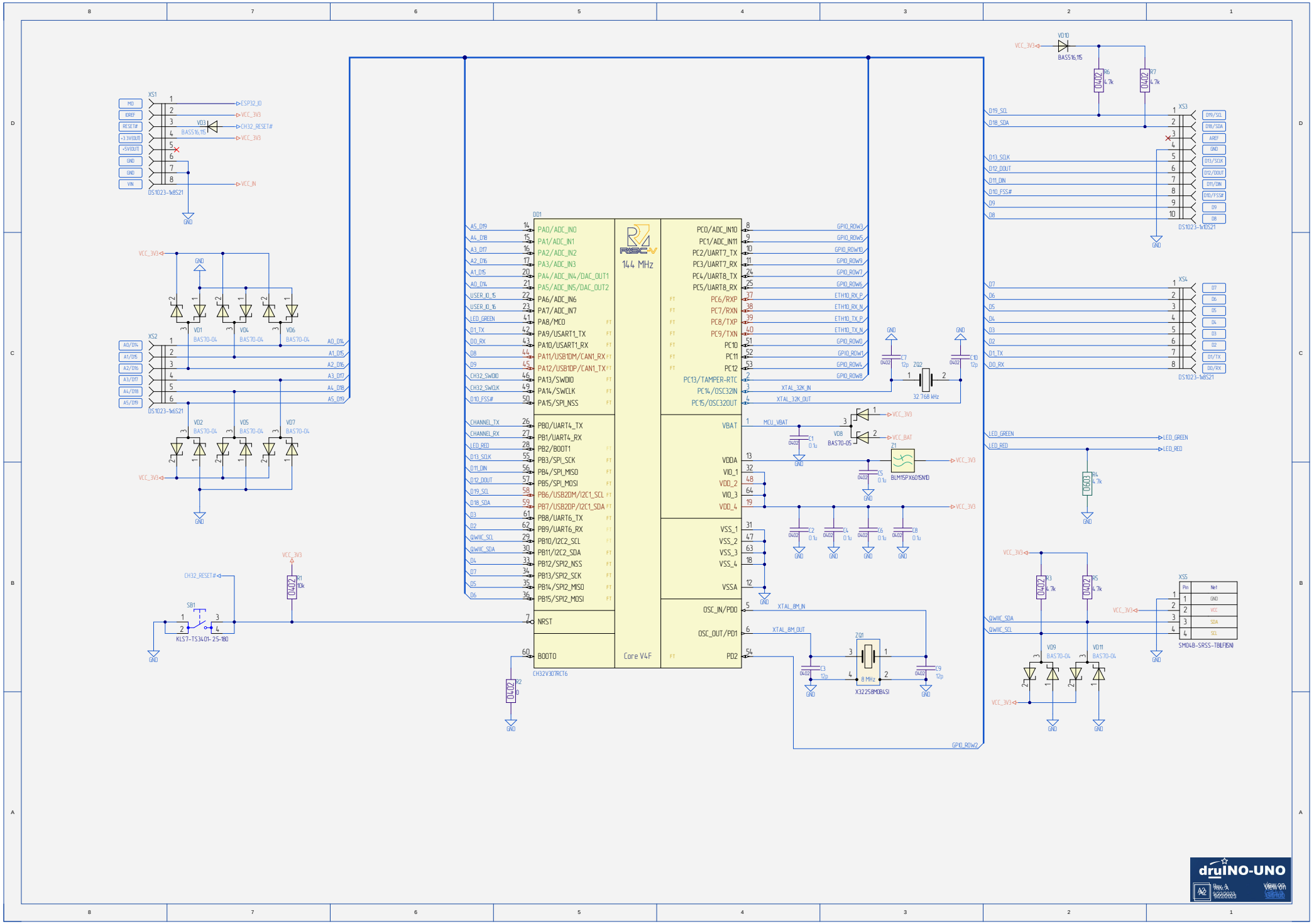
druINO-UNO
Core V4F
144 MHz
CH32V307RCT6
DS1023-1x8S21
DS1023-1x6S21
DS1023-1x4S21
SM04B-SRSS-TBLF(SN)
KLS7-TS3401-25-180
X32258MOB4SI
BLM15PX601SN1D
BAS70-04
BAS70-05
BAS516,115
32.768 kHz
8 MHz
VCC_3V3
GND
VCC_BAT
VCC_IN
ESP32_IO
CH32_RESET#
XTAL_32K_IN
XTAL_32K_OUT
XTAL_8M_IN
XTAL_8M_OUT
MCU_VBAT
GPIO_ROW2
LED_GREEN
LED_RED

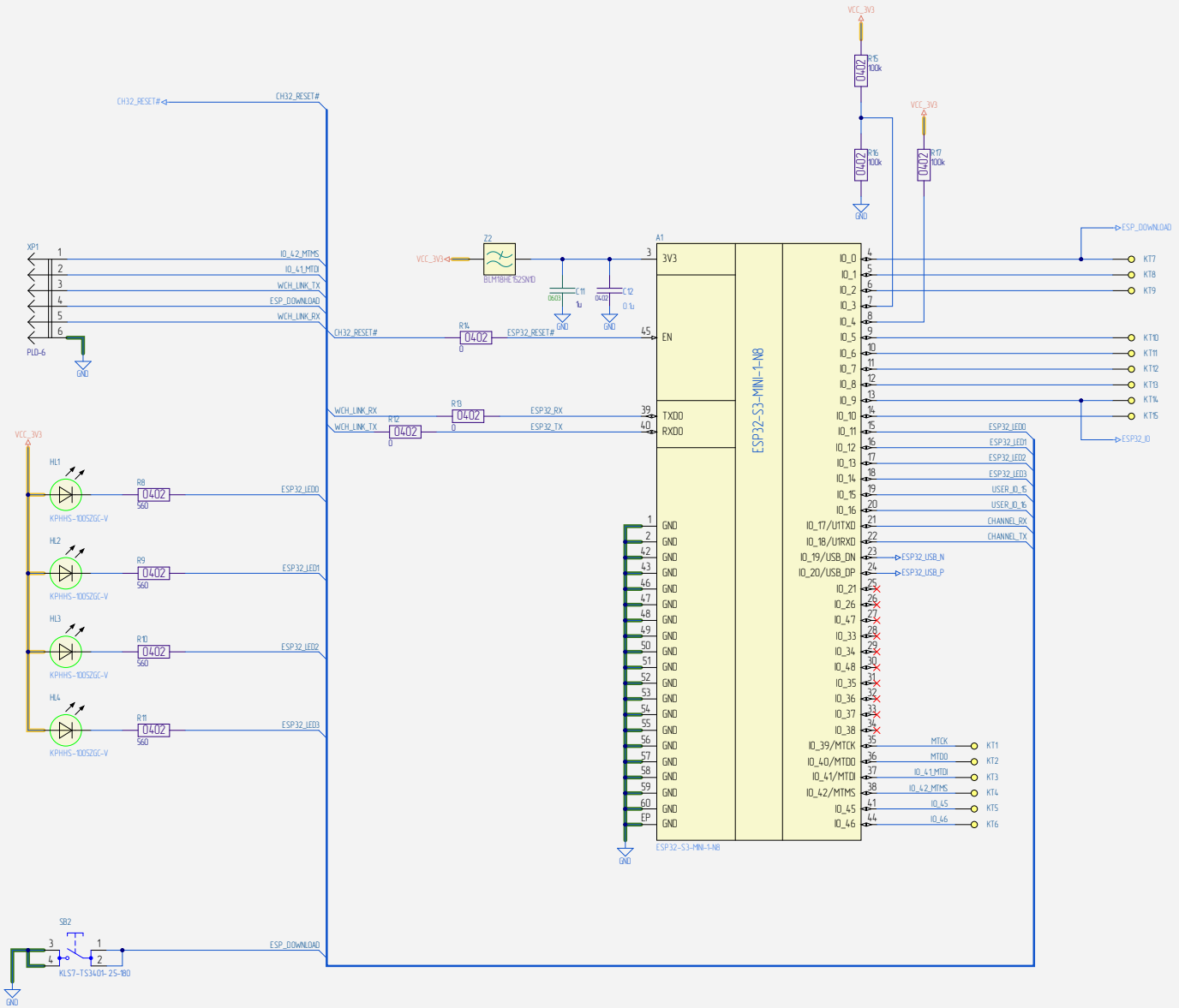

druINO-UNO

A2 Rev. A 9/22/2023 View on GitHub

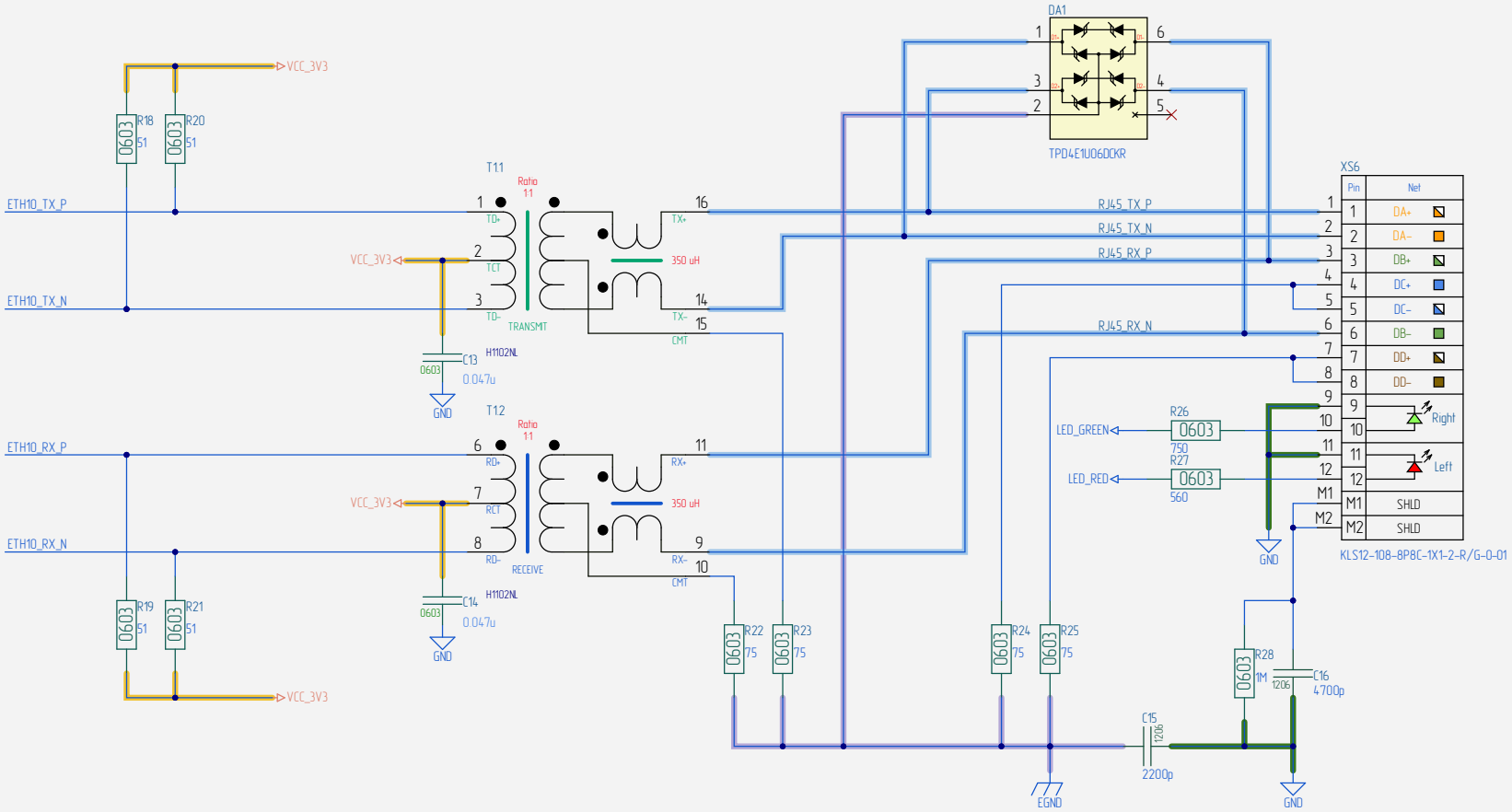

druINO-UNO

A3 Rev. A 9/22/2023

View on GitHub

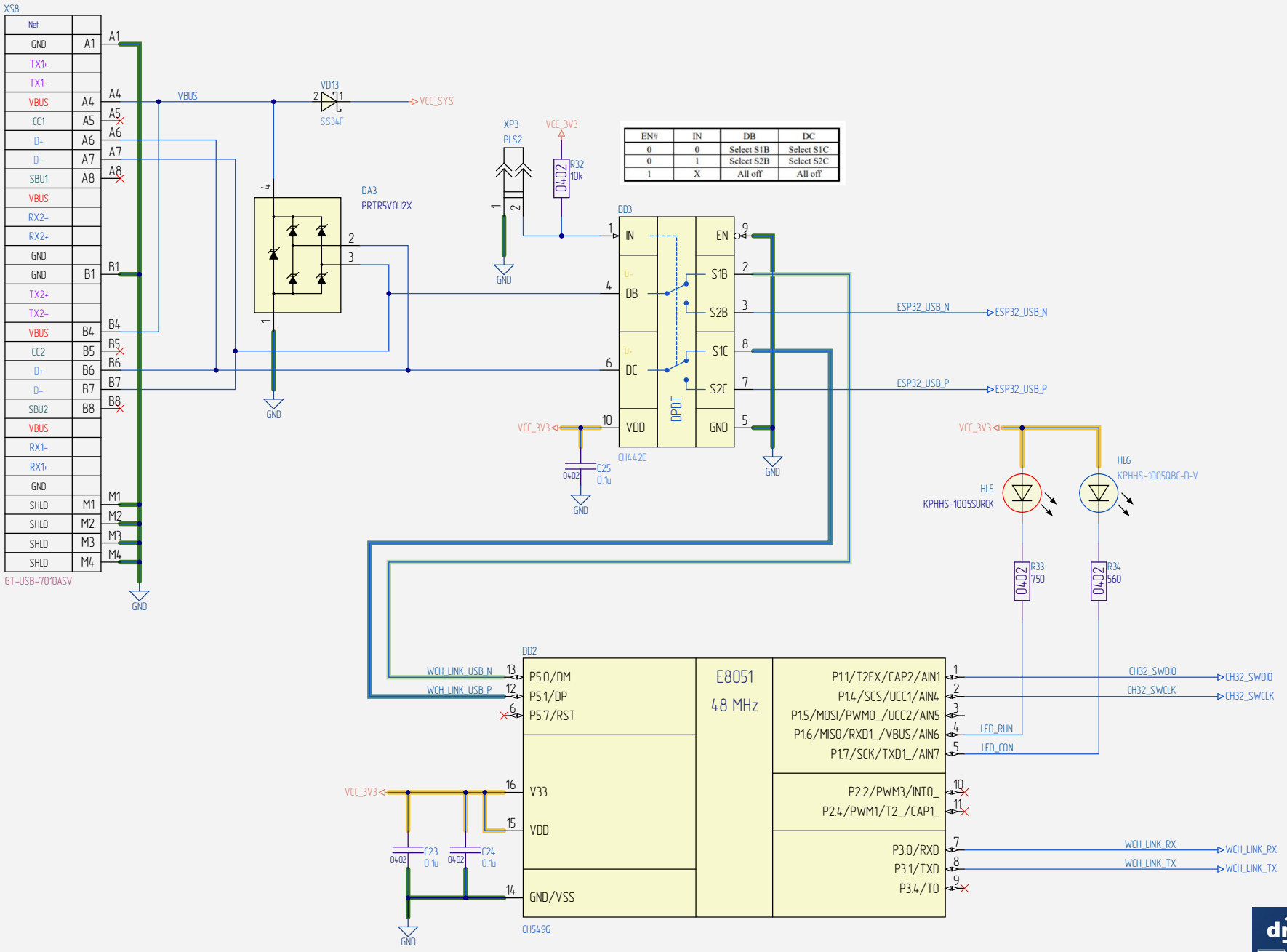

EN#	IN	DB	DC
0	0	Select S1B	Select S1C
0	1	Select S2B	Select S2C
1	X	All off	All off

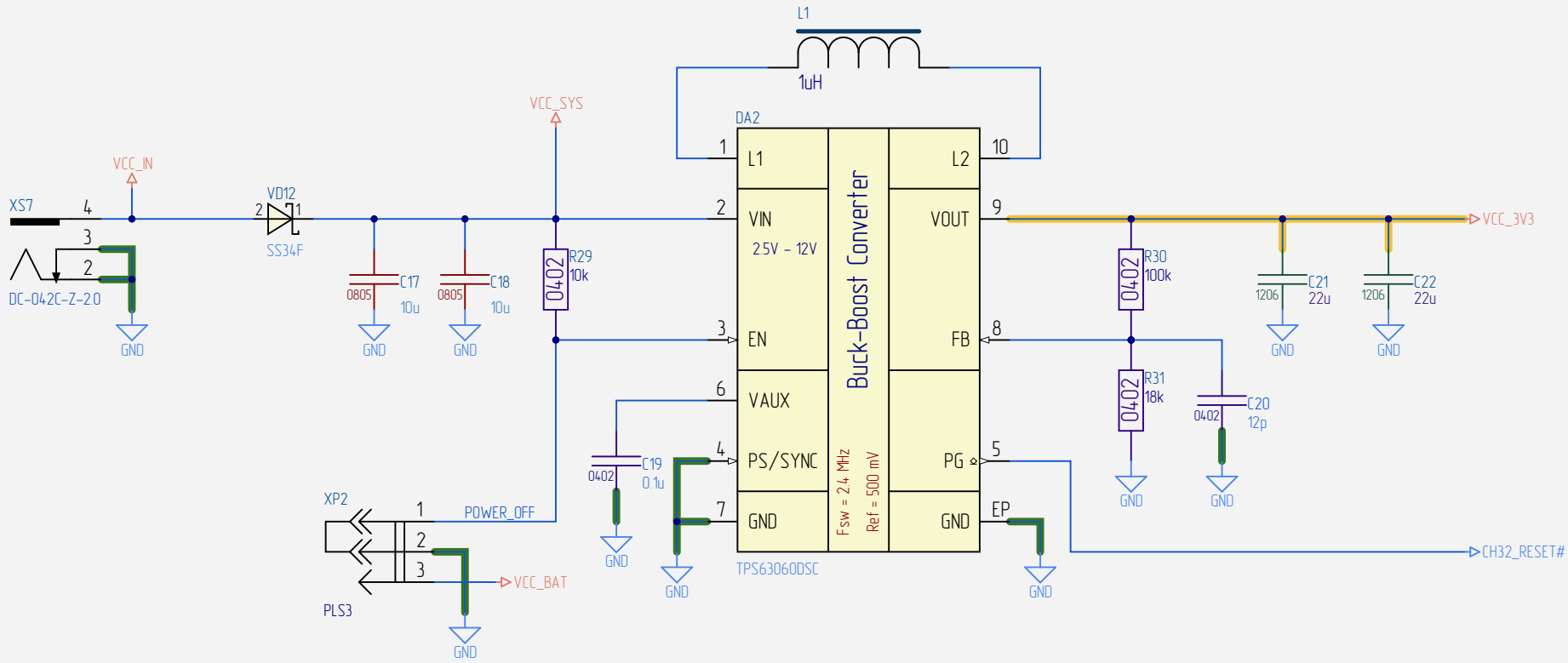

druINO-UNO

A4 Rev. A 9/22/2023

view on GitHub

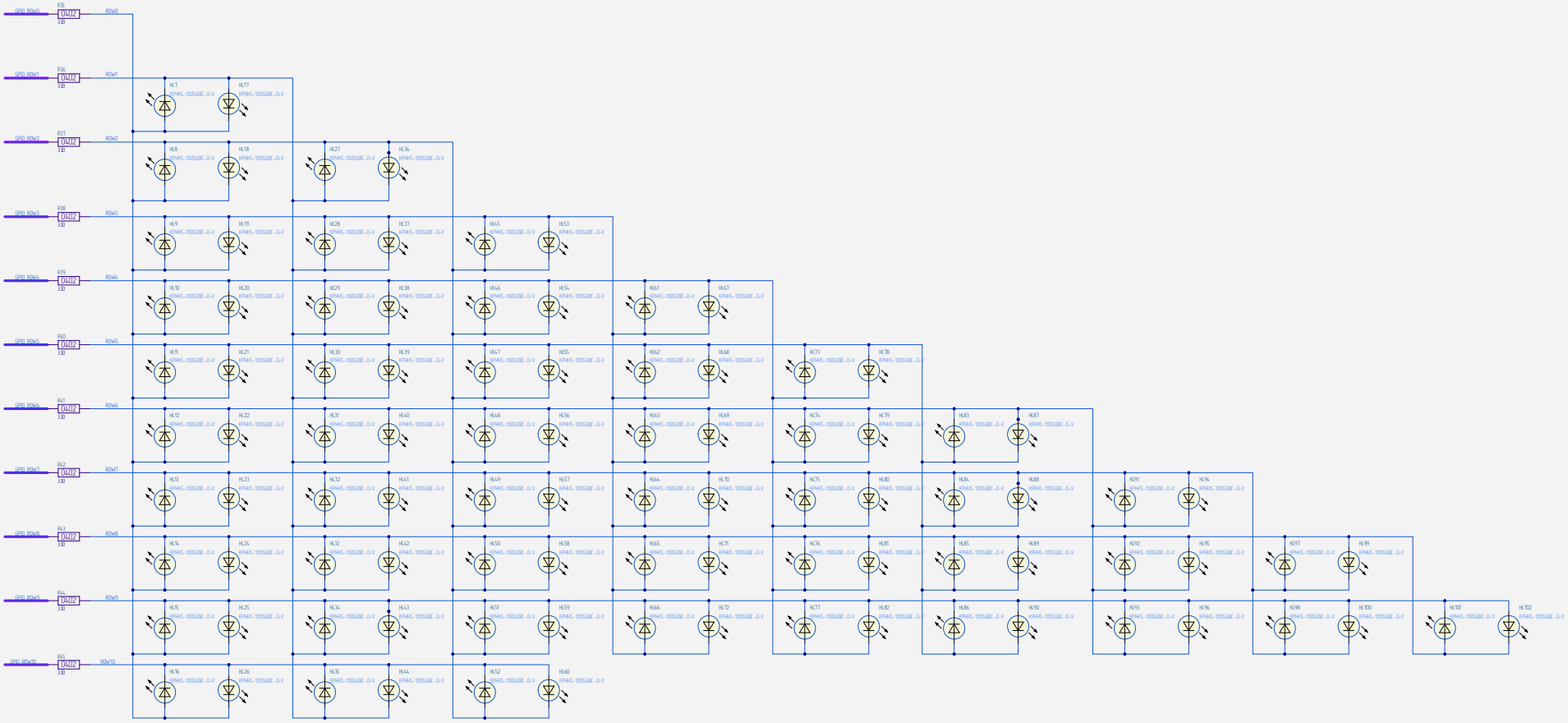

druINO-UNO

A1 Rev. A 9/20/2023

WWW.SBI