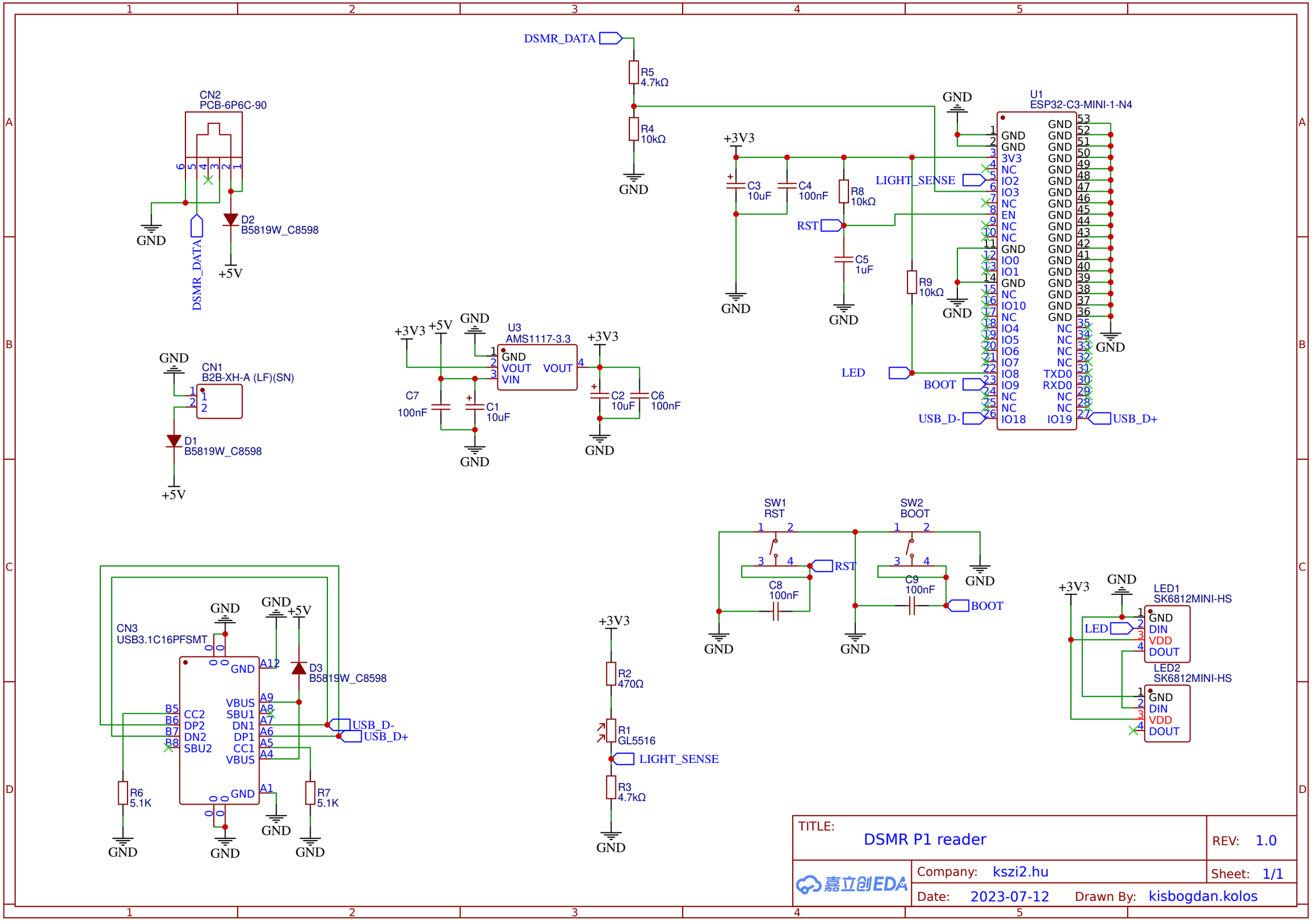

TITLE: DSMR P1 reader		REV: 1.0
嘉立创EDA	Company: kszi2.hu	Sheet: 1/1
	Date: 2023-07-12	Drawn By: kisbogdan.kolos