L1-2: Quantum Computing - Foundation, Applications, Hardware Possibilities

Vishvendra S. Poonia
Department of Electronics and Communication Engineering
Indian Institute of Technology Roorkee
vishvendra@ece.iitr.ac.in
vishvendra.punia@gmail.com

This session

Foundations of the “Quantum” Behavior

Distinctions from the Classical Systems

Applications of Quantum Computing

Postulates of Quantum Mechanics

Foundation: The Classical behavior

Experiment with particles

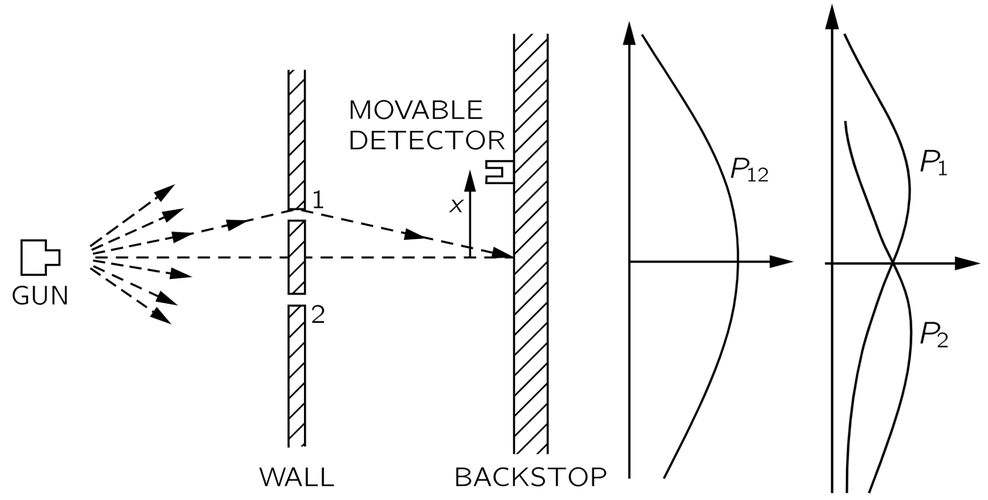

$$P_{12} = P_1 + P_2$$

Experiment with waves

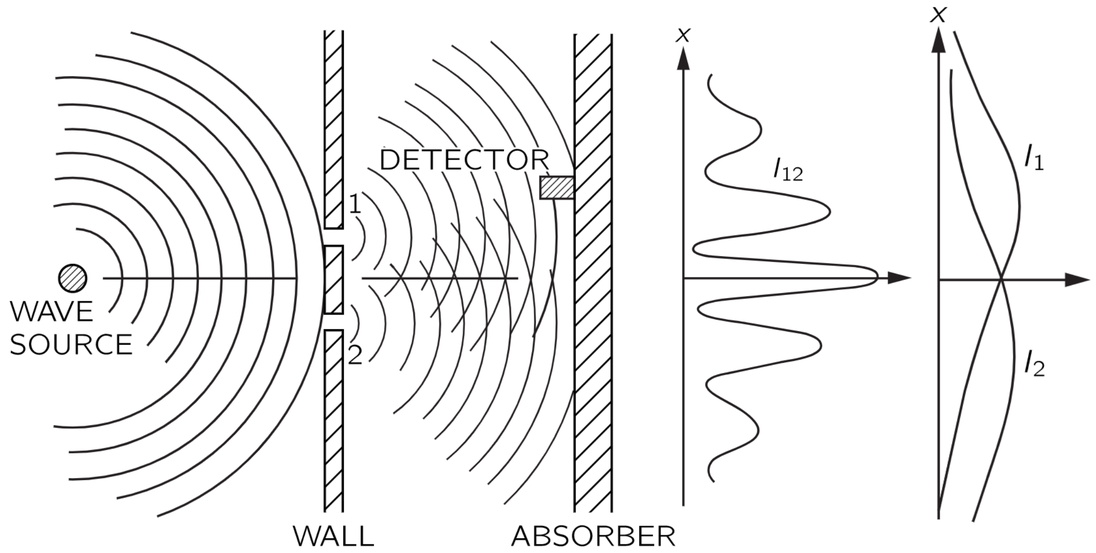

$$I_{12} = |h_1 + h_2|^2 \qquad I_1 = |h_1|^2 \quad I_2 = |h_2|^2$$

- **Waves show interference, arises from wave superposition**

https://www.feynmanlectures.caltech.edu/III_01.html

Foundation: The Quantum Mechanical Behavior

Experiment with electrons

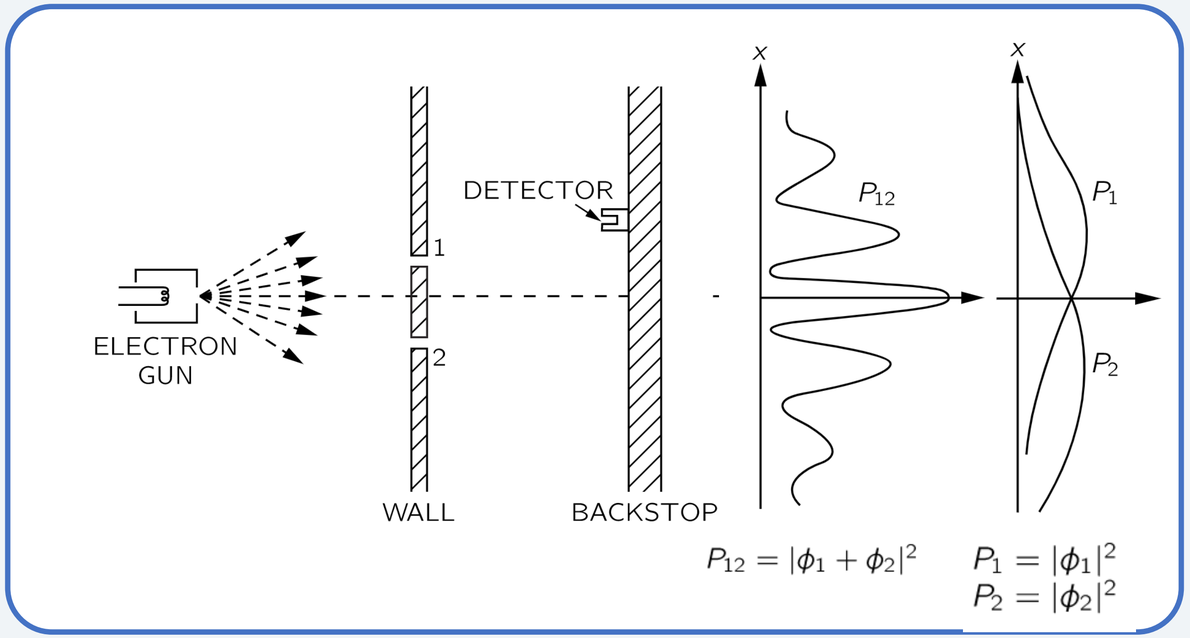

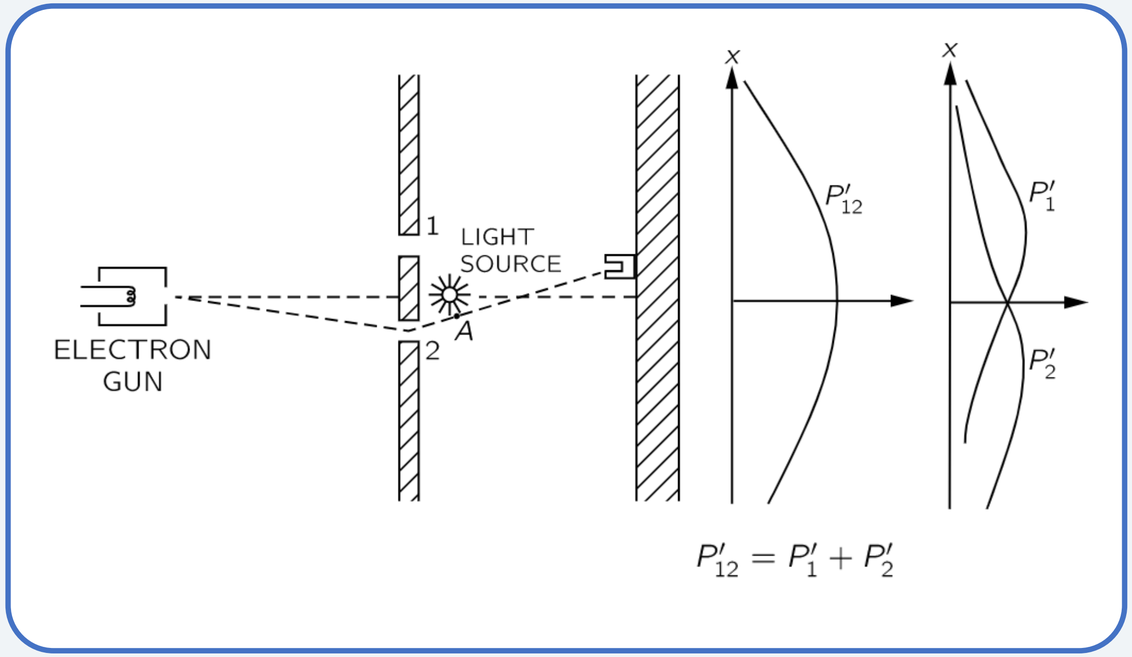

Key takeaways:

- **Atomic-scale phenomena behave in ways nothing like everyday experience with macroscopic objects, waves, or classical particles**
- **Electrons behave like particles at detection, yet their probability distribution behaves like a wave.**
- **The act of measurement fundamentally alters the behavior of quantum systems.**
- **Nature does not behave like classical waves or particles; it requires the concept of probability amplitudes and superposition.**

https://www.feynmanlectures.caltech.edu/III_01.html

Foundation: The Quantum Mechanical Behavior

Experiment with electrons

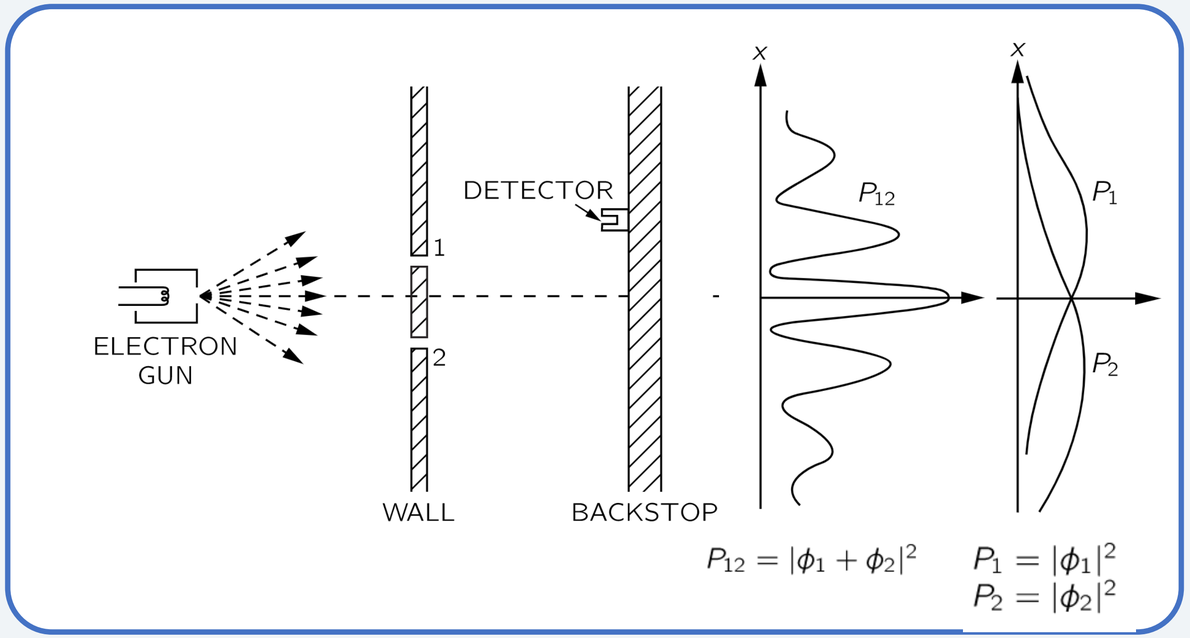

Key takeaways:

- **Quantum systems are neither classical particles nor waves:** They are described by amplitudes whose squared magnitude gives probabilities.
- **Interference arises from the superposition of these amplitudes:** not from simple probability addition.
- **Measurement (gaining which-path information) destroys interference:** showing that observation actively influences outcomes.
- **The behavior defies classical intuition:** demanding a new conceptual approach to reality at microscopic scales.

https://www.feynmanlectures.caltech.edu/III_01.html

Thank you