L3-4: Quantum Computing —Foundation, Applications, Hardware Possibilities

Vishvendra S. Poonia
Department of Electronics and Communication Engineering
Indian Institute of Technology Roorkee
vishvendra@ece.iitr.ac.in
vishvendra.punia@gmail.com

This session

Foundations of the “Quantum” Behavior

Distinctions from the Classical Systems

Applications of Quantum Computing

Postulates of Quantum Mechanics

QM Foundation: The Stern-Gerlach Experiment

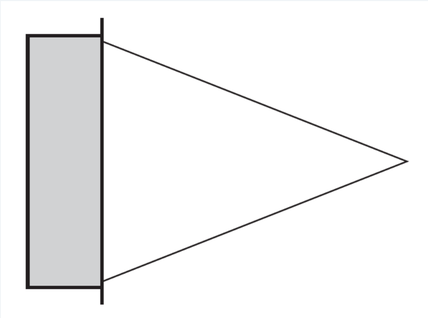

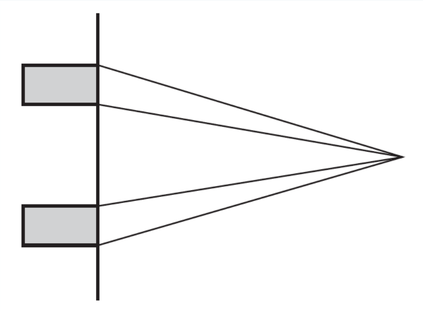

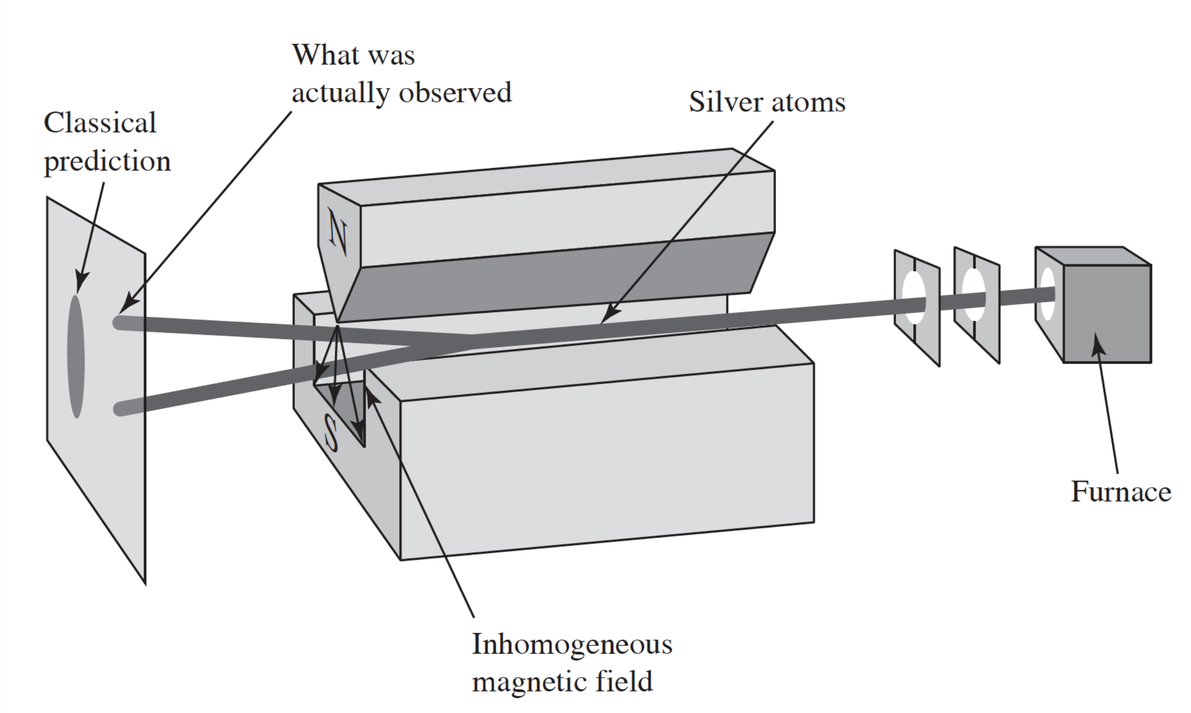

$$\boldsymbol{\mu} \propto \mathbf{S},$$

$$F_z = \frac{\partial}{\partial z}(\boldsymbol{\mu} \cdot \mathbf{B}) \simeq \mu_z \frac{\partial B_z}{\partial z},$$

Quantization of spin angular momentum!

J. J. Sakurai, Modern Quantum Mechanics

QM Foundation: Sequential Stern-Gerlach Experiments

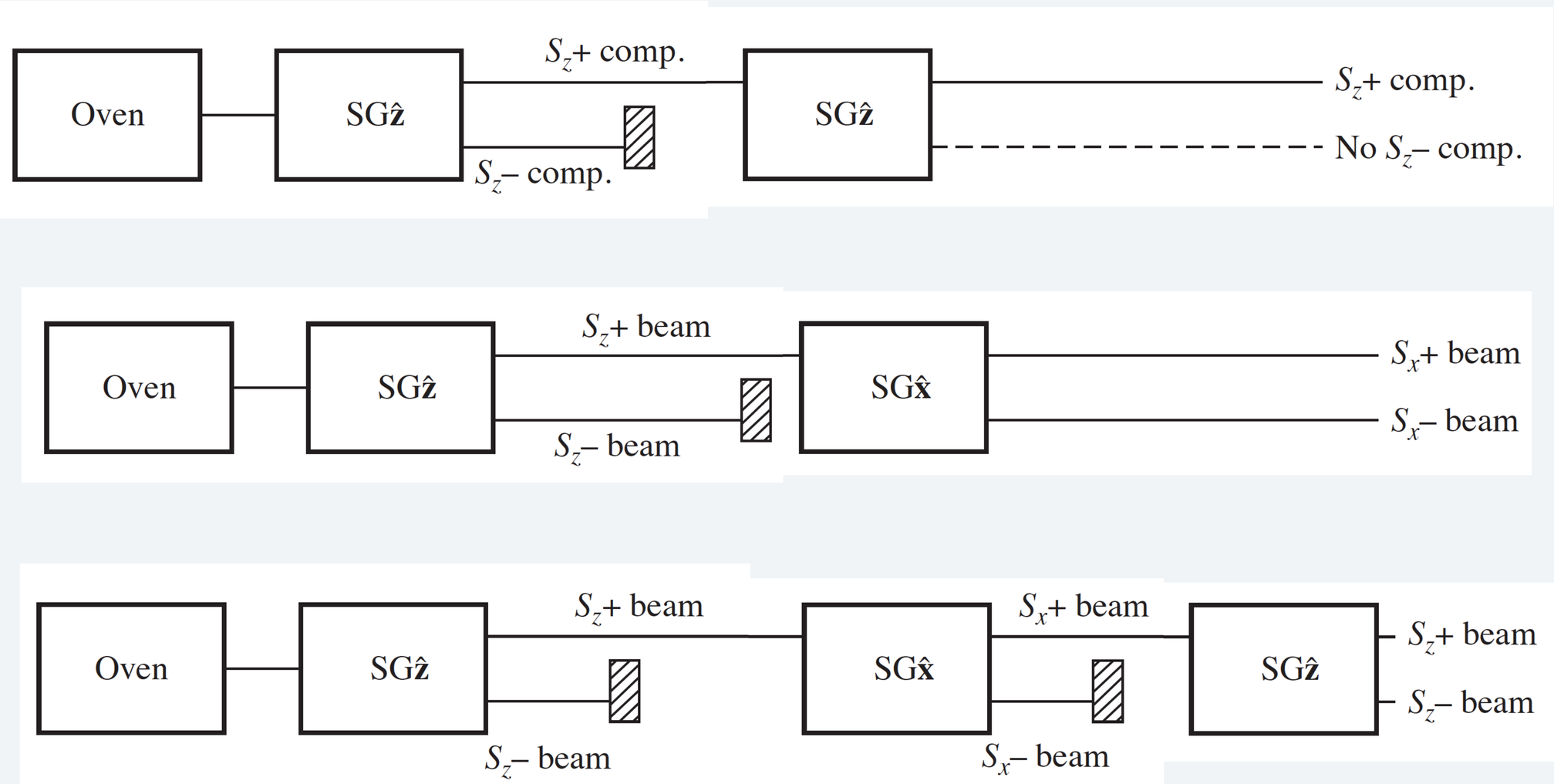

J. J. Sakurai, Modern Quantum Mechanics

QM Foundation: The Stern-Gerlach Experiment takeaway

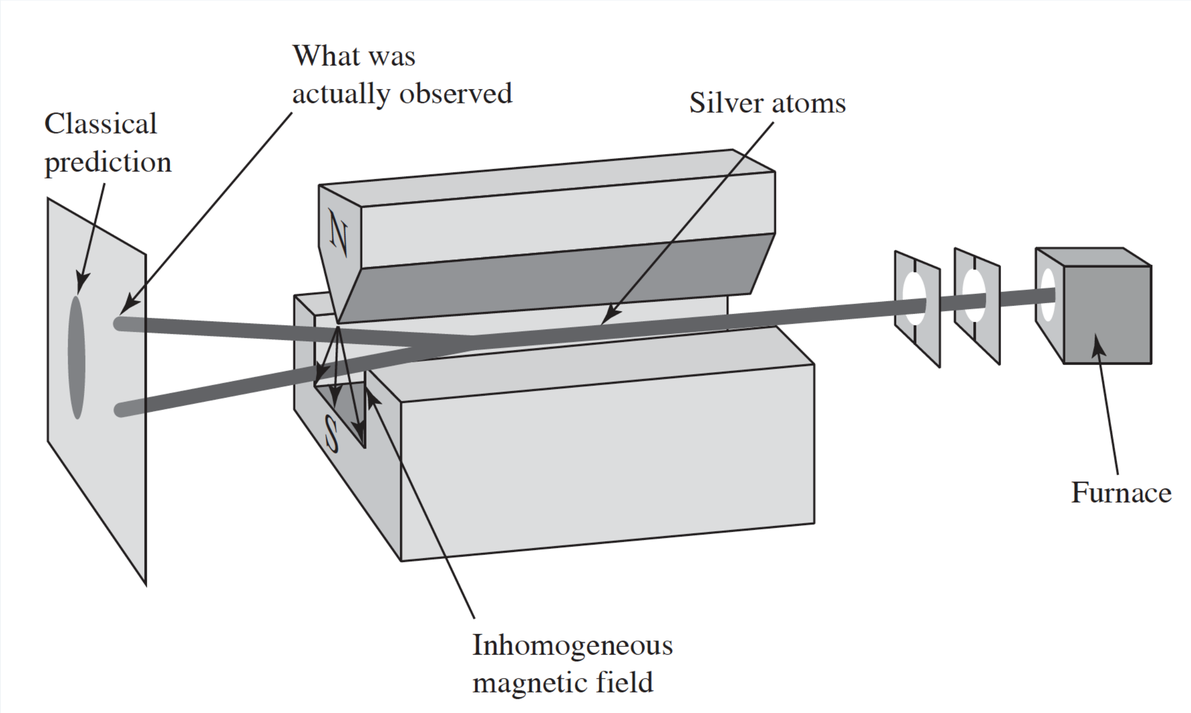

Measuring along a new axis doesn't just reveal new information — it rewrites the system's state and erases incompatible previous information.

J. J. Sakurai, Modern Quantum Mechanics

The Stern–Gerlach experiment shows:

- **Angular momentum is quantized.**
- **Measurement outcomes are discrete.**
- **Spin-1/2 systems are 2D complex vector spaces.**
- **Changing measurement axis reveals superposition.**
- **This is the physical origin of the qubit!**

From this experiment, we get:

- **The idea of Superposition**
- **Basis change, Unitary rotations, State Collapse**
- **Measurement is not passive observation ⟹It actively prepares the system in a new state.**
- **Measurement of conjugate variables destroy the information**

Thank you