MySQL Practice Lab: Jeevan Raksha Pharmacy

1. Case Study Overview

Store Name: Jeevan Raksha Pharmacy

Location: India

Business Logic:

- **Customers:** Local residents purchasing medicines.
- **Suppliers:** Distributors providing stock to the pharmacy.
- **Medicines:** The inventory (Tablets, Syrups, etc.) with expiry dates.
- **Bills (Orders):** The transaction record containing total amount and payment mode (UPI, Cash, Card).
- **Order Items:** The breakdown of which medicines are included in a specific bill.

2. Entity Relationship Diagram (ERD)

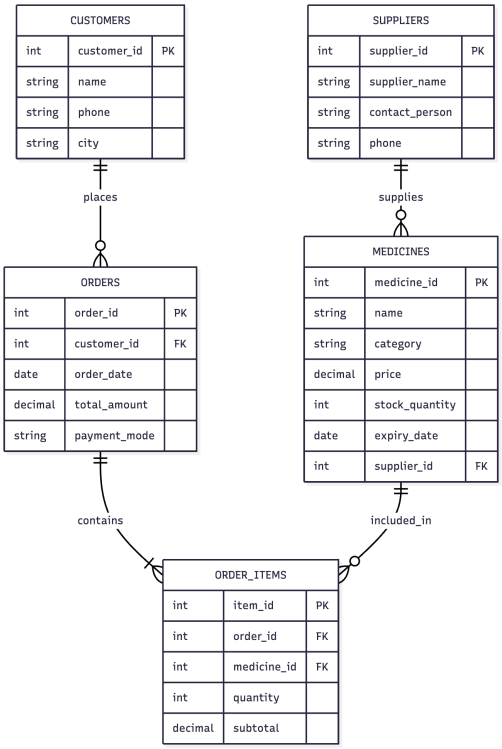

3. Database Setup Script

Copy and execute the following SQL script in your MySQL Workbench/Terminal to create the environment for the exercise.

```
CREATE DATABASE IF NOT EXISTS jeevan_raksha_pharmacy;
USE jeevan_raksha_pharmacy;

-- 1. Create Tables

CREATE TABLE customers (
    customer_id INT AUTO_INCREMENT PRIMARY KEY,
    name VARCHAR(100),
    phone VARCHAR(15),
    city VARCHAR(50)
);

CREATE TABLE suppliers (
    supplier_id INT AUTO_INCREMENT PRIMARY KEY,
    supplier_name VARCHAR(100),
    contact_person VARCHAR(100),
    phone VARCHAR(15)
);

CREATE TABLE medicines (
    medicine_id INT AUTO_INCREMENT PRIMARY KEY,
    name VARCHAR(100),
    category VARCHAR(50),
    price DECIMAL(10,2),
    stock_quantity INT,
    expiry_date DATE,
    supplier_id INT,
    FOREIGN KEY (supplier_id) REFERENCES
suppliers(supplier_id)
);

CREATE TABLE orders (
    order_id INT AUTO_INCREMENT PRIMARY KEY,
```

```
    customer_id INT,
    order_date DATE,
    total_amount DECIMAL(10,2),
    payment_mode ENUM('UPI', 'Cash', 'Card'),
    FOREIGN KEY (customer_id) REFERENCES
customers(customer_id)
);

CREATE TABLE order_items (
    item_id INT AUTO_INCREMENT PRIMARY KEY,
    order_id INT,
    medicine_id INT,
    quantity INT,
    subtotal DECIMAL(10,2),
    FOREIGN KEY (order_id) REFERENCES orders(order_id),
    FOREIGN KEY (medicine_id) REFERENCES
medicines(medicine_id)
);

-- 2. Insert Data

-- Customers
INSERT INTO customers (name, phone, city) VALUES
('Rahul Sharma', '9876543210', 'Mumbai'),
('Priya Verma', '9123456789', 'Delhi'),
('Amit Patel', '9988776655', 'Ahmedabad'),
('Sneha Reddy', '8877665544', 'Hyderabad'),
('Vikram Singh', '7766554433', 'Mumbai');

-- Suppliers
INSERT INTO suppliers (supplier_name, contact_person, phone)
VALUES
('Apollo Distributors', 'Rajesh Gupta', '022-123456'),
('MedPlus Supply Chain', 'Suresh Nair', '040-987654'),
('Himalaya Wellness', 'Anjali Mehta', '011-456789');

-- Medicines
INSERT INTO medicines (name, category, price, stock_quantity,
expiry_date, supplier_id) VALUES
('Dolo 650', 'Tablet', 30.00, 500, '2025-12-31', 1),
('Azithral 500', 'Tablet', 120.00, 50, '2024-05-20', 1),
('Benadryl', 'Syrup', 110.00, 20, '2024-11-15', 2),
('Combiflam', 'Tablet', 45.00, 200, '2026-01-01', 3),
('Insulin Pen', 'Injection', 800.00, 5, '2024-03-10', 2);
```

```sql
-- Orders
INSERT INTO orders (customer_id, order_date, total_amount,
payment_mode) VALUES
(1, '2023-10-01', 150.00, 'UPI'),
(2, '2023-10-02', 240.00, 'Card'),
(3, '2023-10-05', 45.00, 'Cash'),
(1, '2023-10-10', 800.00, 'UPI'),
(4, '2023-10-12', 1200.00, 'Card');

-- Order Items
INSERT INTO order_items (order_id, medicine_id, quantity,
subtotal) VALUES
(1, 1, 5, 150.00), -- Rahul bought 5 Dolo
(2, 2, 2, 240.00), -- Priya bought 2 Azithral
(3, 4, 1, 45.00),  -- Amit bought 1 Combiflam
(4, 5, 1, 800.00), -- Rahul bought 1 Insulin
(5, 5, 1, 800.00), -- Sneha bought 1 Insulin
(5, 2, 2, 240.00), -- Sneha bought 2 Azithral
(5, 1, 5, 150.00); -- Sneha bought 5 Dolo
```

4. Exercise Questions

Level 1: Simple Queries

1. **Customer List:** Retrieve the name and city of all customers.
2. **Stock Check:** Find the names of medicines that are 'Syrup' or 'Injection'.
3. **High Value Bills:** List all orders where the `total_amount` is greater than ₹500.
4. **Mumbai Residents:** Find the phone numbers of all customers living in 'Mumbai'.

Level 2: Intermediate Queries (Aggregates & Joins)

5. **Payment Analysis:** How many orders were paid using 'UPI'?

6. **Supplier Count:** Count how many medicines are supplied by 'Apollo Distributors' (Use Subquery or Join).

7. **Order Details:** List the Customer Name, Order Date, and Total Amount for every order placed.

8. **Revenue by Mode:** Calculate the total money earned through each payment mode (UPI, Card, Cash).

Level 3: Complex Queries

9. **Best Selling Medicine:** Which medicine has been sold the most (in terms of total quantity)?

10. **Customer Lifetime Value:** List the names of customers who have spent more than ₹1000 in total across all their orders.

11. **Inventory Audit:** List the `medicine_name`, `stock_quantity`, and `supplier_name` for medicines that have less than 50 units left in stock.