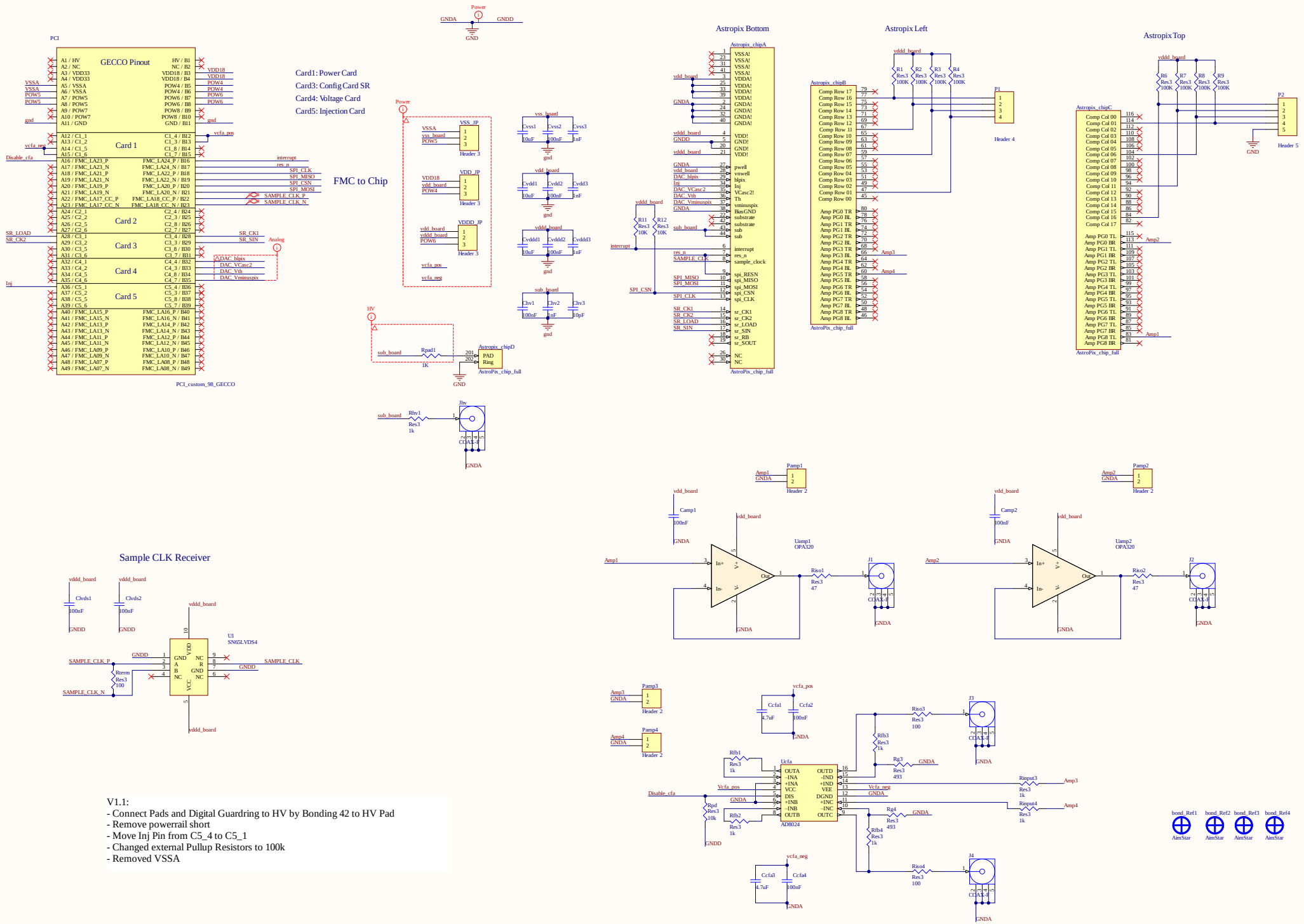
PCI
GECCO Pinout
Card 1
Card 2
Card 3
Card 4
Card 5
PCI_custom_98_GECCO
Card1: Power Card
Card3: Config Card SR
Card4: Voltage Card
Card5: Injection Card
FMC to Chip
Power
GNDA
GNDD
GND
Header 3
Header 5
Astropix Bottom
Astropix Left
Astropix Top
Astropix_chipA
Astropix_chipB
Astropix_chipC
Astropix_chipD
AstroPix_chip_full
Header 4
Header 2
Sample CLK Receiver
U1
SN65LVDS4
Uamp1
Uamp2
OPA320
Ucfa
AD8024
CCAX-F
AimStar
V1.1:
- Connect Pads and Digital Guardring to HV by Bonding 42 to HV Pad
- Remove powerrail short
- Move Inj Pin from C5_4 to C5_1
- Changed external Pullup Resistors to 100k
- Removed VSSA

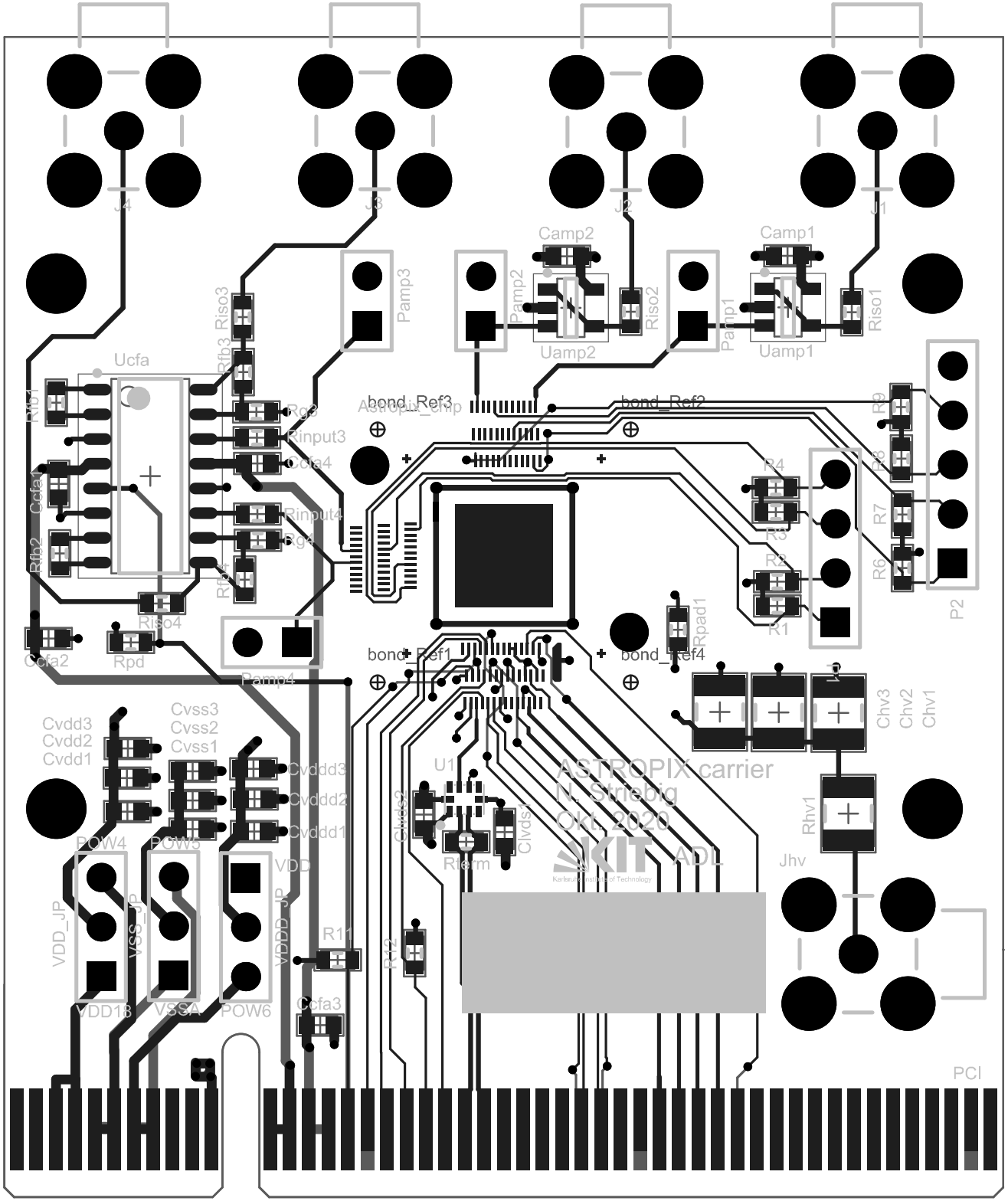
J4
J3
J2
J1
Camp2
Camp1
Pamp3
Pamp2
Pamp1
Riso3
Riso2
Riso1
Uamp2
Uamp1
Ucfa
Rfb3
Rfb1
Ccfa1
Rfb2
Rg3
Rinput3
Ucfa4
Rinput4
Rg4
Rfb4
Riso4
Ccfa2
Rpd
Pamp4
bond_Ref3
bond_Ref2
bond_Ref1
bond_Ref4
R4
R3
R2
R1
R9
R8
R7
R6
P2
Rpad1
Chv3
Chv2
Chv1
Rhv1
Jhv
Cvdd3
Cvdd2
Cvdd1
Cvss3
Cvss2
Cvss1
Cvddd3
Cvddd2
Cvddd1
U1
Cvdds2
Cvdds1
Rterm
ASTROPIX carrier
N. Striebig
Okt. 2020
KIT
Karlsruhe Institute of Technology
ADL
POW4
POW5
VDD
VDD_JP
VSS_JP
VDDD_JP
VDD18
VSSA
POW6
R11
R12
Ccfa3
PCI