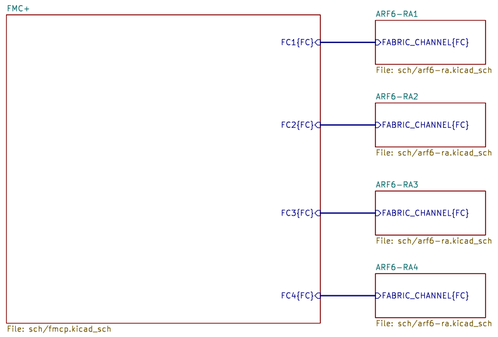

50 Ohm Microstrip

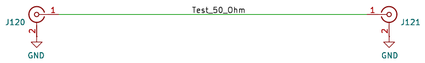

Mounting Holes

H101 M2.5_Pad
H102 M2.5
H103 M2.5_Pad
H104 M2.5

Fiducials

FID101 Fiducial
FID102 Fiducial
FID103 Fiducial
FID104 Fiducial
FID105 Fiducial
FID106 Fiducial

Heatsink

Heatsink

TestPoints

+3V3_FMCP
+1V8_FMCP
GND

Licensed under CERN-OHL-P v2
Robert, Gartmann, Lukas Scheller
Luis Ardila-Perez, Marvin Fuchs
Institute for Data Processing and Electronics (IPE)
Karlsruher Institute of Technology (KIT)
Karlsruher Institut für Technologie
Luis Ardila

Sheet: /
File: QBRIQS_FMCP_ARC6-ARF6.kicad_sch

Title: FMC+ ARC6-ARF6 breakout IPE-388-09

Size: A2	Date: 2025-04-19	Rev: 1.0
KiCad E.D.A. 9.0.1		Id: 1/6

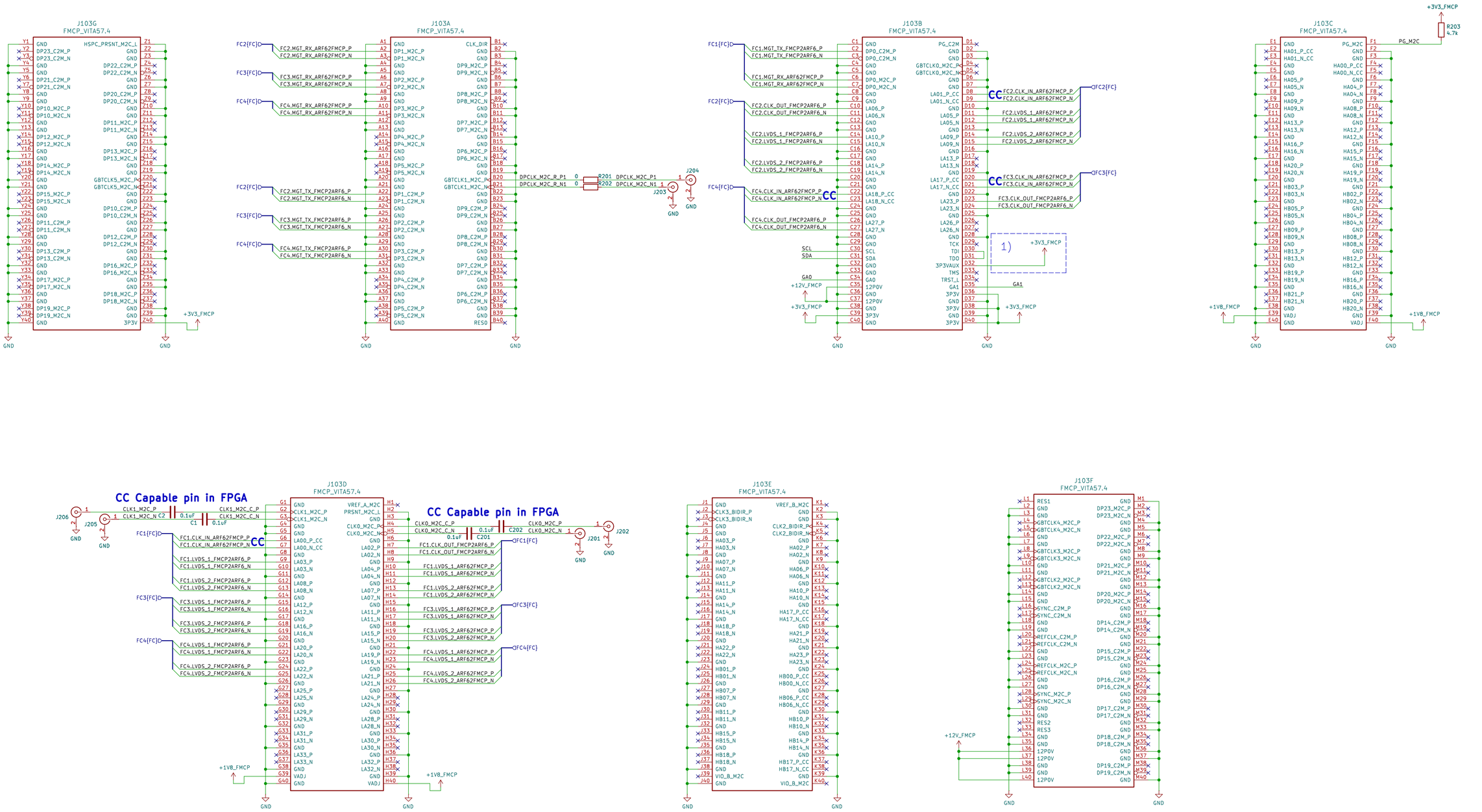

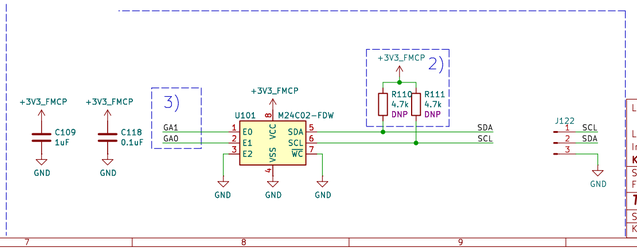

NOTES:
1) Eva Board (ZCU111, ZCU216, VCU118) have +3V3AUX connected to +3V3
2) I2C (SDA and SCL) is pulled up at the EVA Board to +3V3
3) VITA 57.1– Observation 5.22:
   GA[0] is connected to Address bit [1]
   and GA[1] is connected to Address bit[0].
4) PG_M2C signal is pulled up in Eva Board
5) FPGA_CLK needs capacitors in the mezzanine
6) DPCLKs have capacitors in the Eva Board

Licensed under CERN-OHL-P v2

Luis Ardila-Perez, Marvin Fuchs
Institute for Data Processing and Electronics (IPE)
Karlsruhe Institute of Technology (KIT)
Karlsruher Institut für Technologie
Luis Ardila

Sheet: /FMC+/
File: fmcp.kicad_sch

Title: FMC+ ARC6-ARF6 breakout IPE-388-09

Size: A2	Date: 2025-04-19	Rev: 1.0
KiCad E.D.A. 9.0.1		Id: 2/6

ARF6-08-S-RA-TR

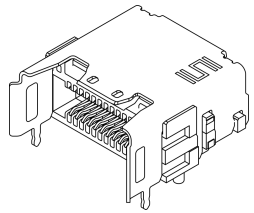

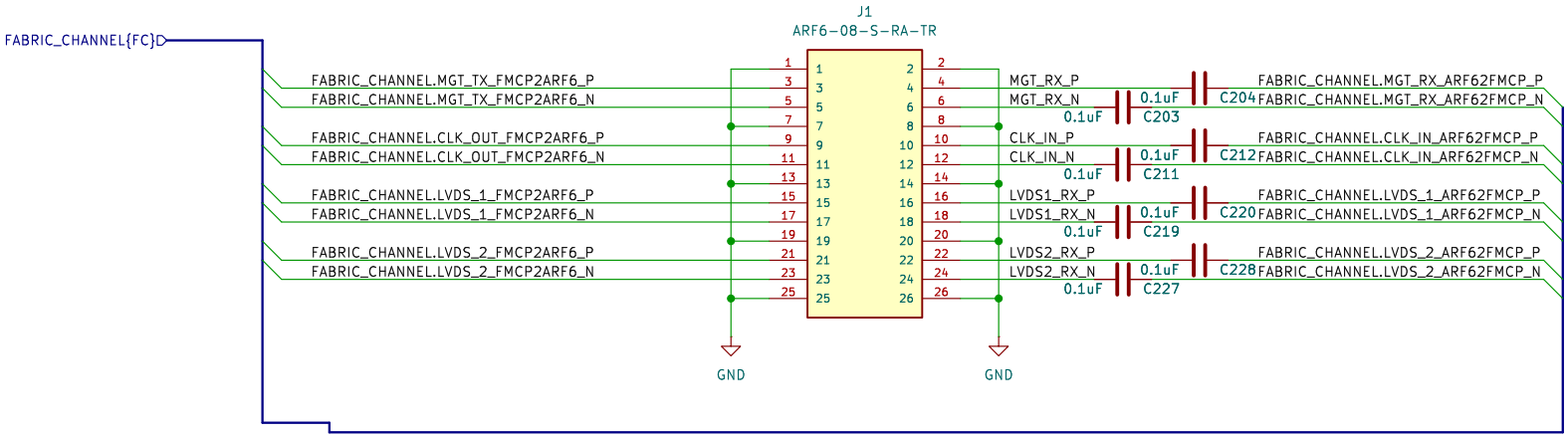

Compatible cable

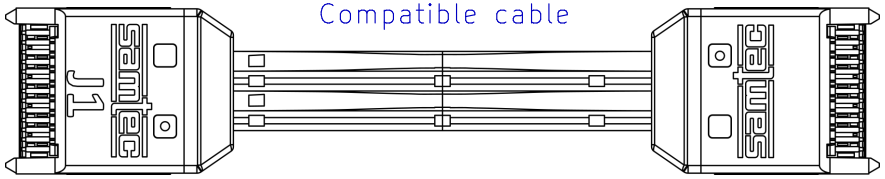

ARC6-08-06.0-LU-LD-02-1

ARC6-08-XX X-XX-XX-XX-X SIGNAL MAPPING																										
WIRING OPTION		POSITIONS																								
-2 (PIN1 TO PIN 2)	J1	1	3	5	7	9	11	13	15	17	19	21	23	25	2	4	6	8	10	12	14	16	18	20	22	24	26
	NAME	GND1	PAIR		GND1	PAIR		GND1	PAIR		GND1	PAIR		GND1	GND2	PAIR		GND2	PAIR		GND2	PAIR		GND2	PAIR		GND2
	J2	2	4	6	8	10	12	14	16	18	20	22	24	26	1	3	5	7	9	11	13	15	17	19	21	23	25

Licensed under CERN-OHL-P v2

Luis Ardila-Perez, Marvin Fuchs
Institute for Data Processing and Electronics (IPE)
Karlsruhe Institute of Technology (KIT)

Sheet: /ARF6-RA1/
File: arf6-ra.kicad_sch

Title: FMC+ ARC6-ARF6 breakout IPE-388-09

Size: A4	Date: 2025-04-19	**Rev: 1.0**
KiCad E.D.A. 9.0.1		Id: 3/6

ARF6-08-S-RA-TR

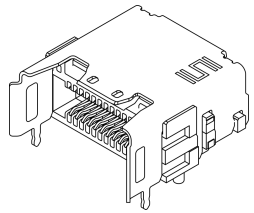

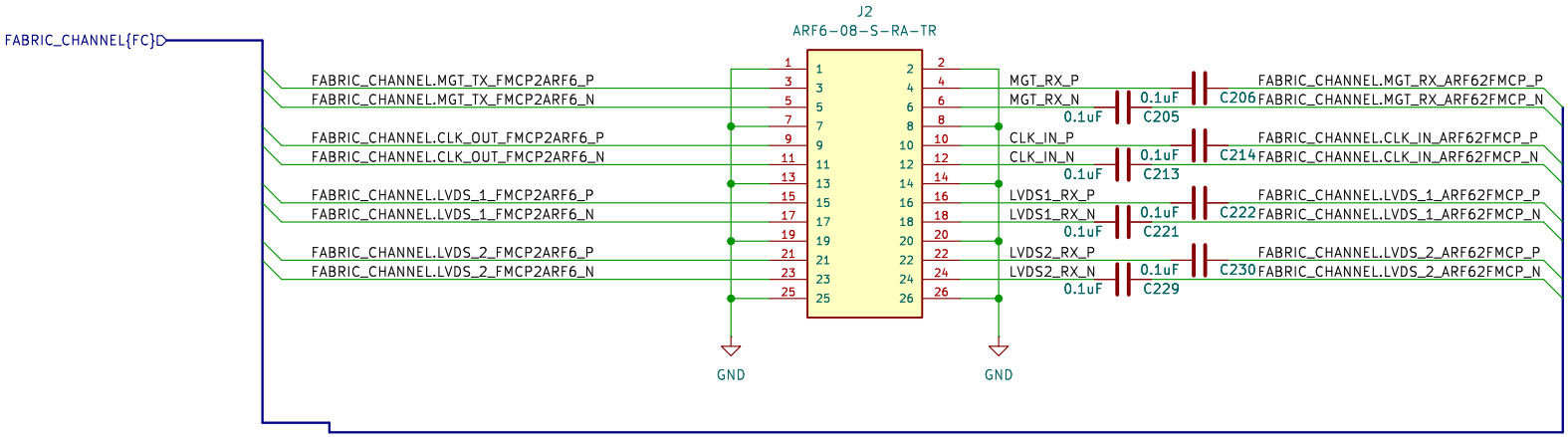

Compatible cable

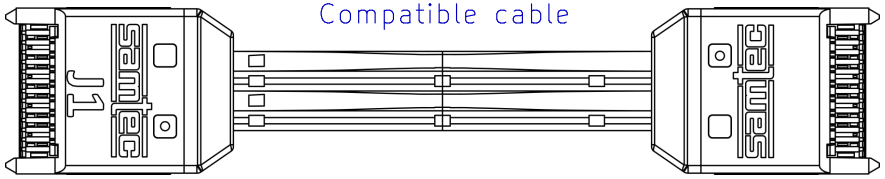

ARC6-08-06.0-LU-LD-02-1

ARC6-08-XX X-XX-XX-XX-X SIGNAL MAPPING																										
WIRING OPTION		POSITIONS																								
-2 (PIN1 TO PIN 2)	J1	1	3	5	7	9	11	13	15	17	19	21	23	25	2	4	6	8	10	12	14	16	18	20	22	24	26
	NAME	GND1	PAIR		GND1	PAIR		GND1	PAIR		GND1	PAIR		GND1	GND2	PAIR		GND2	PAIR		GND2	PAIR		GND2	PAIR		GND2
	J2	2	4	6	8	10	12	14	16	18	20	22	24	26	1	3	5	7	9	11	13	15	17	19	21	23	25

Licensed under CERN-OHL-P v2

Luis Ardila-Perez, Marvin Fuchs
Institute for Data Processing and Electronics (IPE)
Karlsruhe Institute of Technology (KIT)

Sheet: /ARF6-RA2/
File: arf6-ra.kicad_sch

Title: FMC+ ARC6-ARF6 breakout IPE-388-09

Size: A4	Date: 2025-04-19	**Rev: 1.0**
KiCad E.D.A. 9.0.1		Id: 4/6

ARF6-08-S-RA-TR

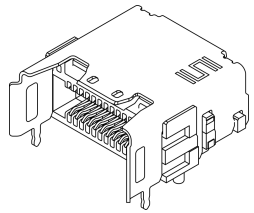

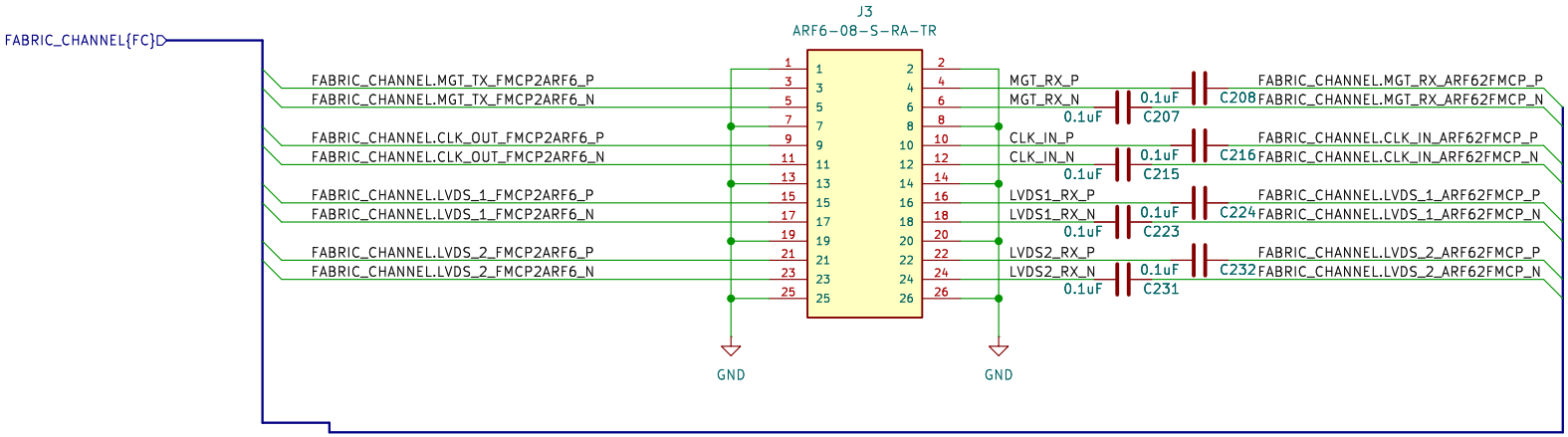

Compatible cable

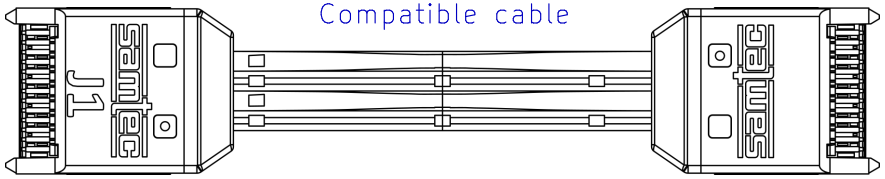

ARC6-08-06.0-LU-LD-02-1

ARC6-08-XX X-XX-XX-XX-X SIGNAL MAPPING

WIRING OPTION		POSITIONS																										
-2 (PIN1 TO PIN 2)	J1	1	3	5	7	9	11	13	15	17	19	21	23	25	2	4	6	8	10	12	14	16	18	20	22	24	26
	NAME	GND1	PAIR		GND1	PAIR		GND1	PAIR		GND1	PAIR		GND1	GND2	PAIR		GND2	PAIR		GND2	PAIR		GND2	PAIR		GND2
	J2	2	4	6	8	10	12	14	16	18	20	22	24	26	1	3	5	7	9	11	13	15	17	19	21	23	25

Licensed under CERN-OHL-P v2

Luis Ardila-Perez, Marvin Fuchs
Institute for Data Processing and Electronics (IPE)
Karlsruhe Institute of Technology (KIT)

Sheet: /ARF6-RA3/
File: arf6-ra.kicad_sch

Title: FMC+ ARC6-ARF6 breakout IPE-388-09

Size: A4	Date: 2025-04-19	**Rev: 1.0**
KiCad E.D.A. 9.0.1		Id: 5/6

ARF6-08-S-RA-TR

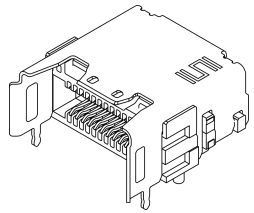

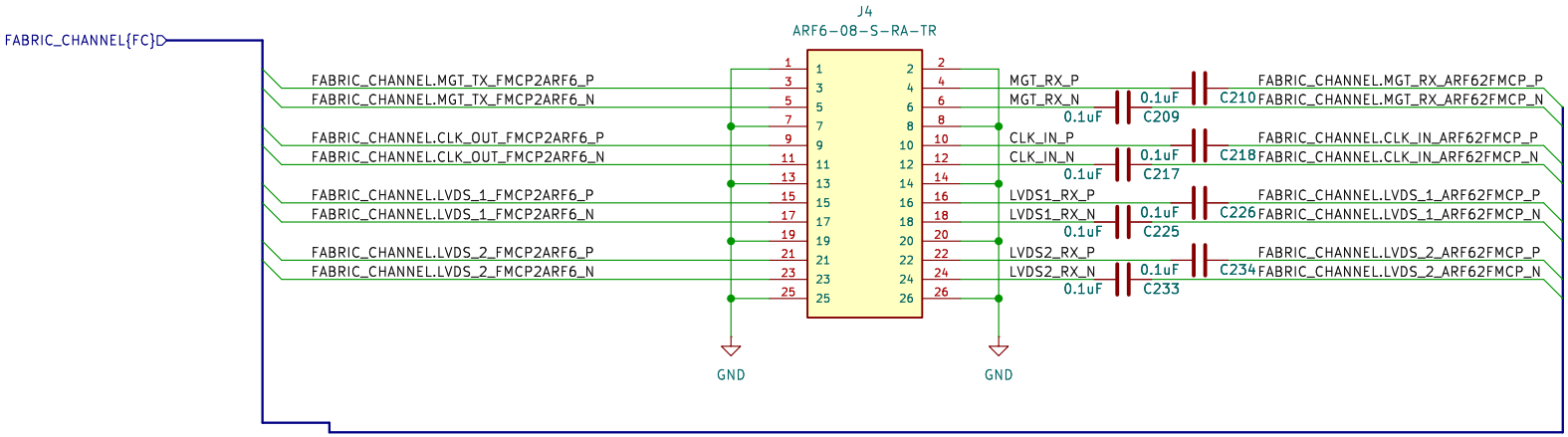

Compatible cable

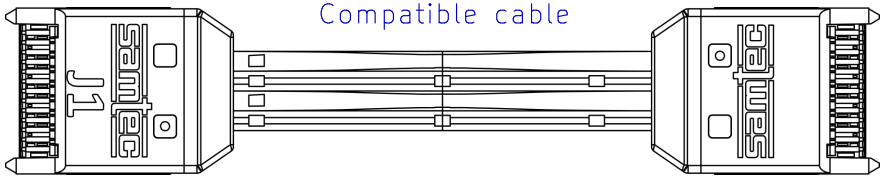

ARC6-08-06.0-LU-LD-02-1

ARC6-08-XX X-XX-XX-XX-X SIGNAL MAPPING

WIRING OPTION		POSITIONS																								
-2 (PIN1 TO PIN 2)	J1	1	3	5	7	9	11	13	15	17	19	21	23	25	2	4	6	8	10	12	14	16	18	20	22	24	26
	NAME	GND1	PAIR		GND1	PAIR		GND1	PAIR		GND1	PAIR		GND1	GND2	PAIR		GND2	PAIR		GND2	PAIR		GND2	PAIR		GND2
	J2	2	4	6	8	10	12	14	16	18	20	22	24	26	1	3	5	7	9	11	13	15	17	19	21	23	25

Licensed under CERN-OHL-P v2

Luis Ardila-Perez, Marvin Fuchs
Institute for Data Processing and Electronics (IPE)
Karlsruhe Institute of Technology (KIT)

Sheet: /ARF6-RA4/
File: arf6-ra.kicad_sch

Title: FMC+ ARC6-ARF6 breakout IPE-388-09

Size: A4	Date: 2025-04-19	**Rev: 1.0**
KiCad E.D.A. 9.0.1		Id: 6/6