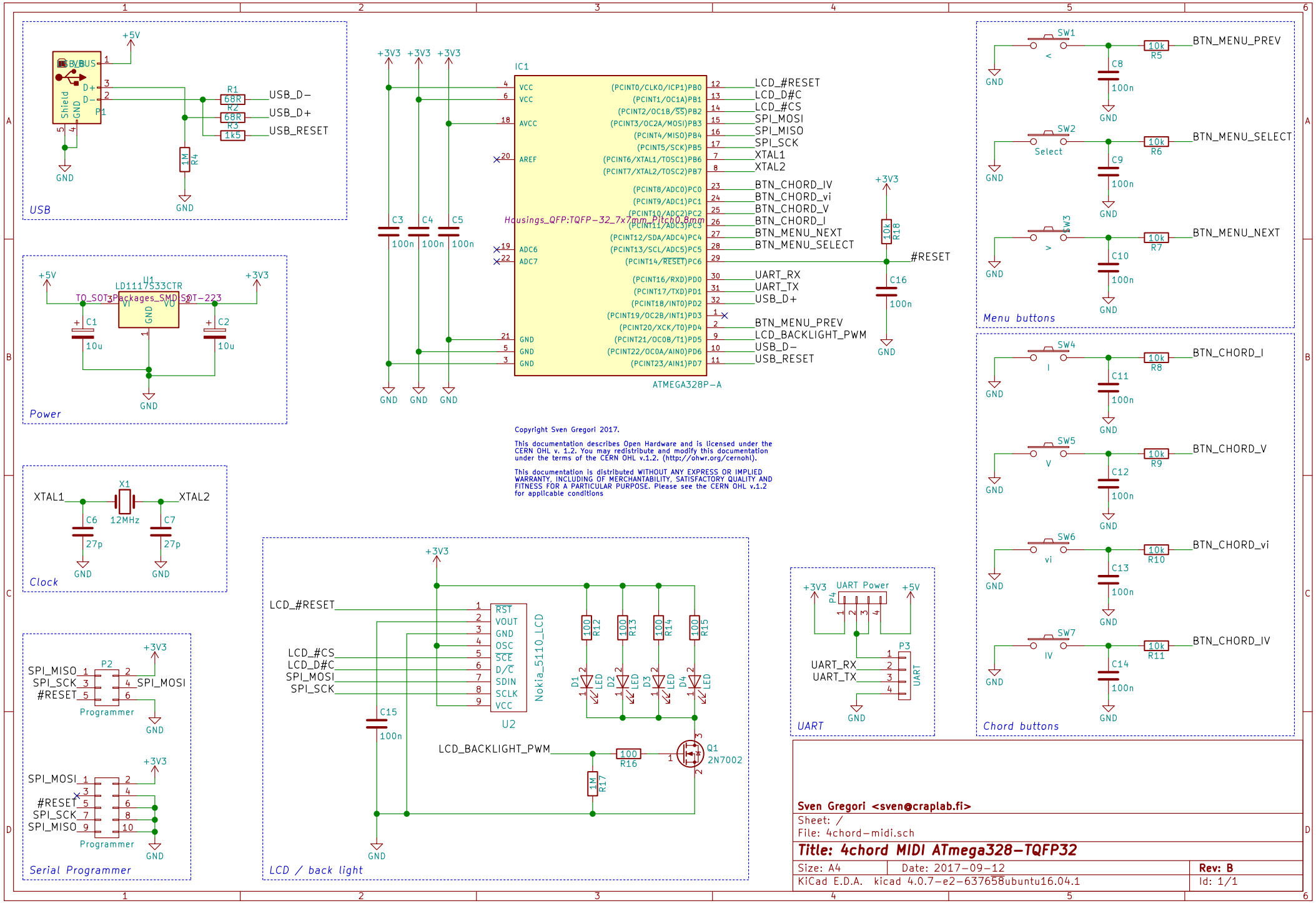
USB
+5V
VBUS
D+
D−
Shield
GND
P1
R1 68R
R2 68R
R3 1k5
R4 1M
USB_D−
USB_D+
USB_RESET
Power
U1
LD1117S33CTR
TO_SOT_Packages_SMD:SOT−223
VI
VO
C1 10u
C2 10u
+3V3
Clock
X1
12MHz
XTAL1
XTAL2
C6 27p
C7 27p
Serial Programmer
P2
SPI_MISO
SPI_SCK
#RESET
SPI_MOSI
Programmer
LCD / back light
LCD_#RESET
LCD_#CS
LCD_D#C
SPI_MOSI
SPI_SCK
RST
VOUT
OSC
SCE
D/C
SDIN
SCLK
VCC
Nokia_5110_LCD
U2
C15 100n
R12 100
R13 100
R14 100
R15 100
D1 LED
D2 LED
D3 LED
D4 LED
LCD_BACKLIGHT_PWM
R16 100
R17 1M
Q1
2N7002
IC1
VCC
AVCC
AREF
ADC6
ADC7
GND
(PCINT0/CLKO/ICP1)PB0
(PCINT1/OC1A)PB1
(PCINT2/OC1B/SS)PB2
(PCINT3/OC2A/MOSI)PB3
(PCINT4/MISO)PB4
(PCINT5/SCK)PB5
(PCINT6/XTAL1/TOSC1)PB6
(PCINT7/XTAL2/TOSC2)PB7
(PCINT8/ADC0)PC0
(PCINT9/ADC1)PC1
(PCINT10/ADC2)PC2
(PCINT11/ADC3)PC3
(PCINT12/SDA/ADC4)PC4
(PCINT13/SCL/ADC5)PC5
(PCINT14/RESET)PC6
(PCINT16/RXD)PD0
(PCINT17/TXD)PD1
(PCINT18/INT0)PD2
(PCINT19/OC2B/INT1)PD3
(PCINT20/XCK/T0)PD4
(PCINT21/OC0B/T1)PD5
(PCINT22/OC0A/AIN0)PD6
(PCINT23/AIN1)PD7
Housings_QFP:TQFP−32_7x7mm_Pitch0.8mm
ATMEGA328P−A
LCD_#RESET
LCD_D#C
LCD_#CS
SPI_MOSI
SPI_MISO
SPI_SCK
XTAL1
XTAL2
BTN_CHORD_IV
BTN_CHORD_vi
BTN_CHORD_V
BTN_CHORD_I
BTN_MENU_NEXT
BTN_MENU_SELECT
#RESET
UART_RX
UART_TX
USB_D+
BTN_MENU_PREV
LCD_BACKLIGHT_PWM
USB_D−
USB_RESET
R18 10k
C16 100n
C3 100n
C4 100n
C5 100n
Copyright Sven Gregori 2017.
This documentation describes Open Hardware and is licensed under the CERN OHL v. 1.2. You may redistribute and modify this documentation under the terms of the CERN OHL v.1.2. (http://ohwr.org/cernohl).
This documentation is distributed WITHOUT ANY EXPRESS OR IMPLIED WARRANTY, INCLUDING OF MERCHANTABILITY, SATISFACTORY QUALITY AND FITNESS FOR A PARTICULAR PURPOSE. Please see the CERN OHL v.1.2 for applicable conditions
UART
UART Power
P4
P3
UART_RX
UART_TX
Menu buttons
SW1
SW2
SW3
Select
BTN_MENU_PREV
BTN_MENU_SELECT
BTN_MENU_NEXT
R5 10k
R6 10k
R7 10k
C8 100n
C9 100n
C10 100n
Chord buttons
SW4
SW5
SW6
SW7
BTN_CHORD_I
BTN_CHORD_V
BTN_CHORD_vi
BTN_CHORD_IV
R8 10k
R9 10k
R10 10k
R11 10k
C11 100n
C12 100n
C13 100n
C14 100n
Sven Gregori <sven@craplab.fi>
Sheet: /
File: 4chord−midi.sch
Title: 4chord MIDI ATmega328−TQFP32
Size: A4
Date: 2017−09−12
Rev: B
KiCad E.D.A. kicad 4.0.7−e2−637658ubuntu16.04.1
Id: 1/1