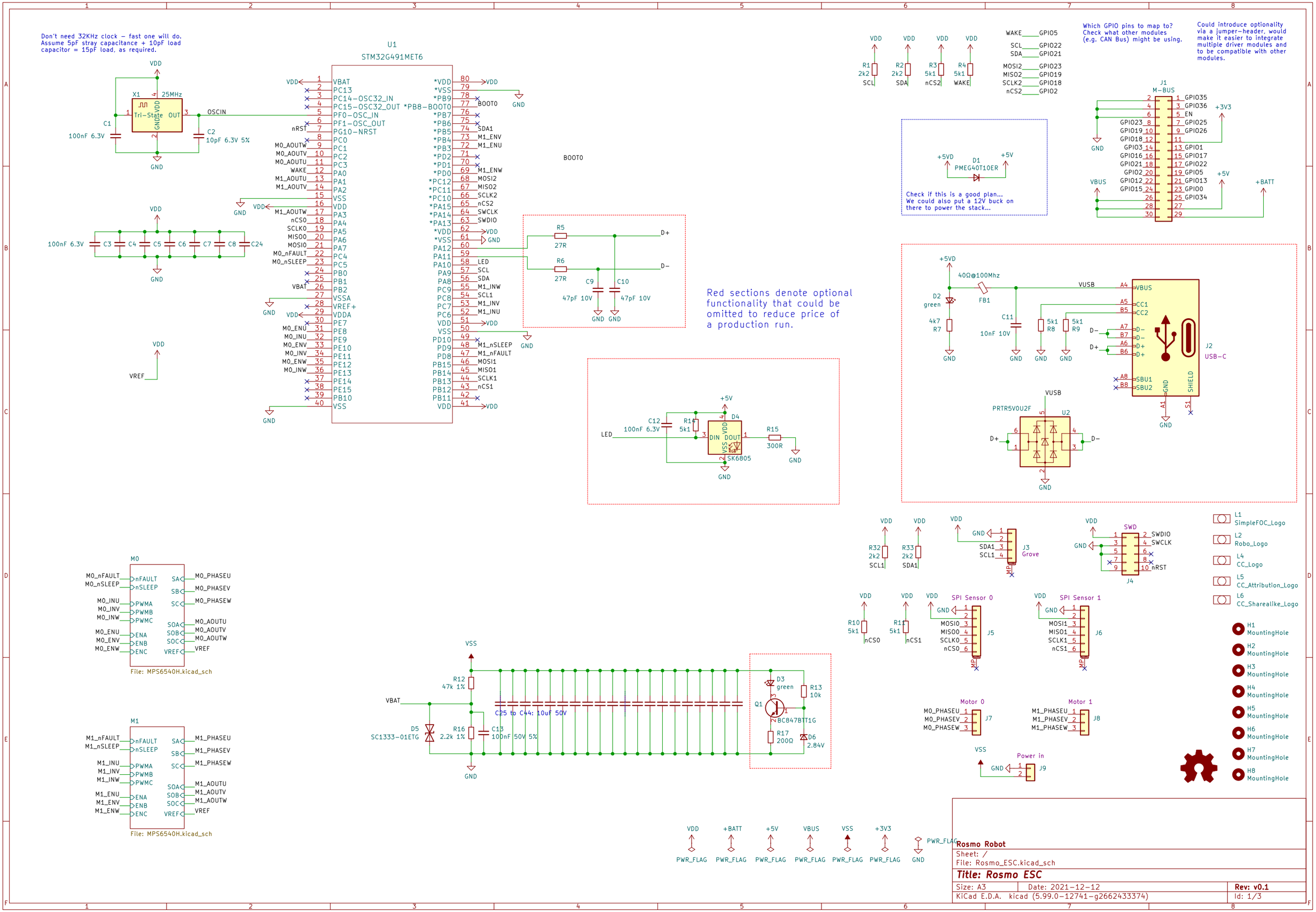
Don't need 32KHz clock – fast one will do.
Assume 5pF stray capacitance + 10pF load
capacitor = 15pF load, as required.
U1
STM32G491MET6
X1
25MHz
Tri-State
OUT
OSCIN
C1
100nF 6.3V
C2
10pF 6.3V 5%
VDD
GND
100nF 6.3V
C3
C4
C5
C6
C7
C8
C24
VREF
nRST
BOOT0
R5
27R
R6
27R
C9
47pF 10V
C10
47pF 10V
D+
D-
Red sections denote optional
functionality that could be
omitted to reduce price of
a production run.
LED
C12
100nF 6.3V
R14
5k1
D4
SK6805
R15
300R
R1
2k2
SCL
R2
2k2
SDA
R3
5k1
nCS2
R4
5k1
WAKE
WAKE GPIO5
SCL GPIO22
SDA GPIO21
MOSI2 GPIO23
MISO2 GPIO19
SCLK2 GPIO18
nCS2 GPIO2
Which GPIO pins to map to?
Check what other modules
(e.g. CAN Bus) might be using.
Could introduce optionality
via a jumper-header, would
make it easier to integrate
multiple driver modules and
to be compatible with other
modules.
J1
M-BUS
+3V3
+5V
+BATT
VBUS
+5VD
D1
PMEG40T10ER
Check if this is a good plan...
We could also put a 12V buck on
there to power the stack...
40Ω@100Mhz
FB1
D2
green
4k7
R7
C11
10nF 10V
5k1
R8
5k1
R9
VUSB
J2
USB-C
SHIELD
PRTR5V0U2F
U2
M0
File: MPS6540H.kicad_sch
M1
File: MPS6540H.kicad_sch
R32
2k2
SCL1
R33
2k2
SDA1
J3
Grove
SWD
J4
SWDIO
SWCLK
nRST
R10
5k1
nCS0
R11
5k1
nCS1
SPI Sensor 0
J5
SPI Sensor 1
J6
Motor 0
J7
Motor 1
J8
Power in
J9
VSS
R12
47k 1%
VBAT
D5
SC1333-01ETG
R16
2.2k 1%
C13
100nF 50V 5%
C25 to C44: 10uF 50V
D3
green
R13
10k
Q1
BC847BTT1G
R17
200Ω
D6
2.84V
L1
SimpleFOC_Logo
L2
Robo_Logo
L4
CC_Logo
L5
CC_Attribution_Logo
L6
CC_Sharealike_Logo
H1
MountingHole
H2
MountingHole
H3
MountingHole
H4
MountingHole
H5
MountingHole
H6
MountingHole
H7
MountingHole
H8
MountingHole
PWR_FLAG
Rosmo Robot
Sheet: /
File: Rosmo_ESC.kicad_sch
Title: Rosmo ESC
Size: A3
Date: 2021-12-12
Rev: v0.1
KiCad E.D.A. kicad (5.99.0-12741-g2662433374)
Id: 1/3

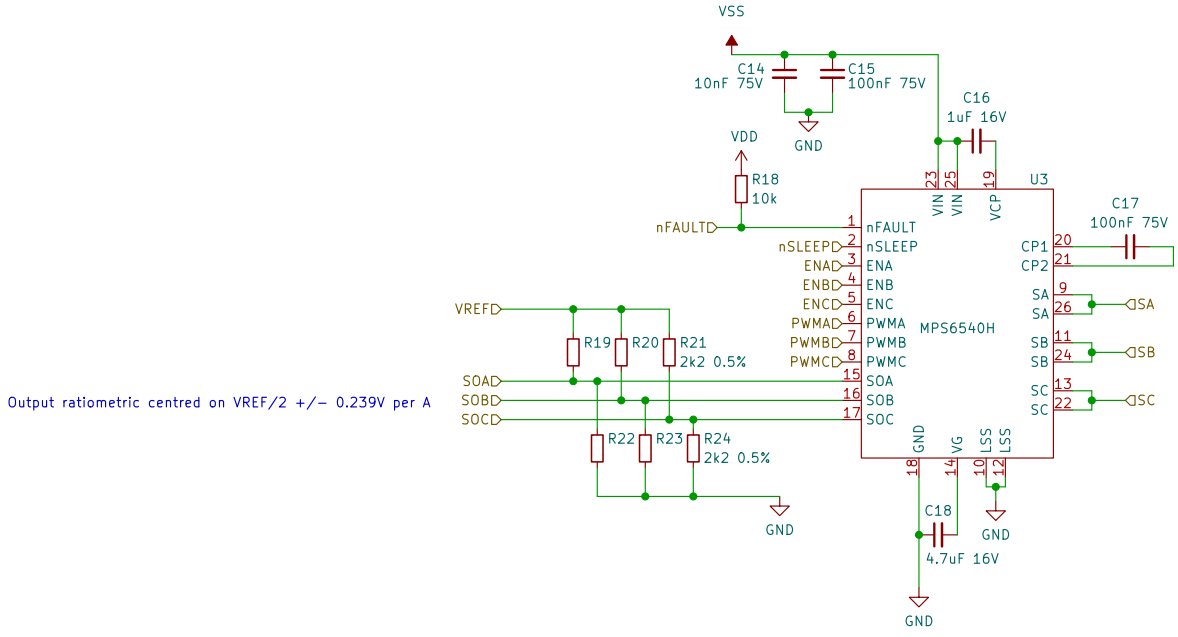

Sheet: /M0/
File: MPS6540H.kicad_sch

Title:

Size: A4	Date:	Rev:
KiCad E.D.A. kicad (5.99.0-12741-g2662433374)		Id: 2/3

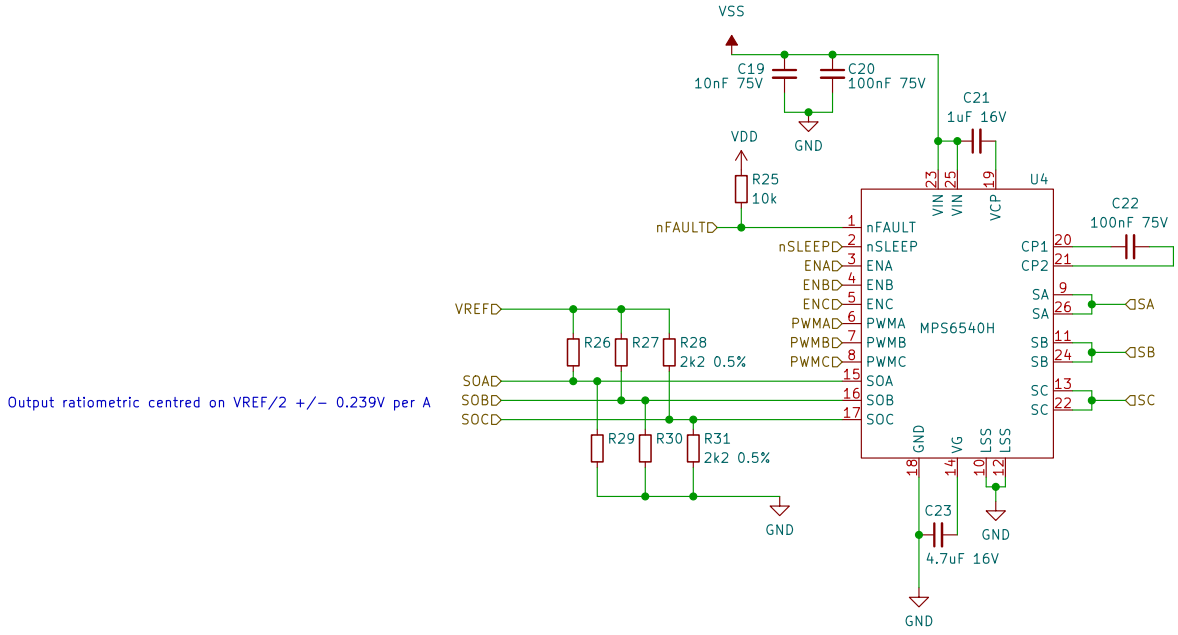

Sheet: /M1/
File: MPS6540H.kicad_sch

Title:

Size: A4	Date:	Rev:
KiCad E.D.A. kicad (5.99.0-12741-g2662433374)		Id: 3/3