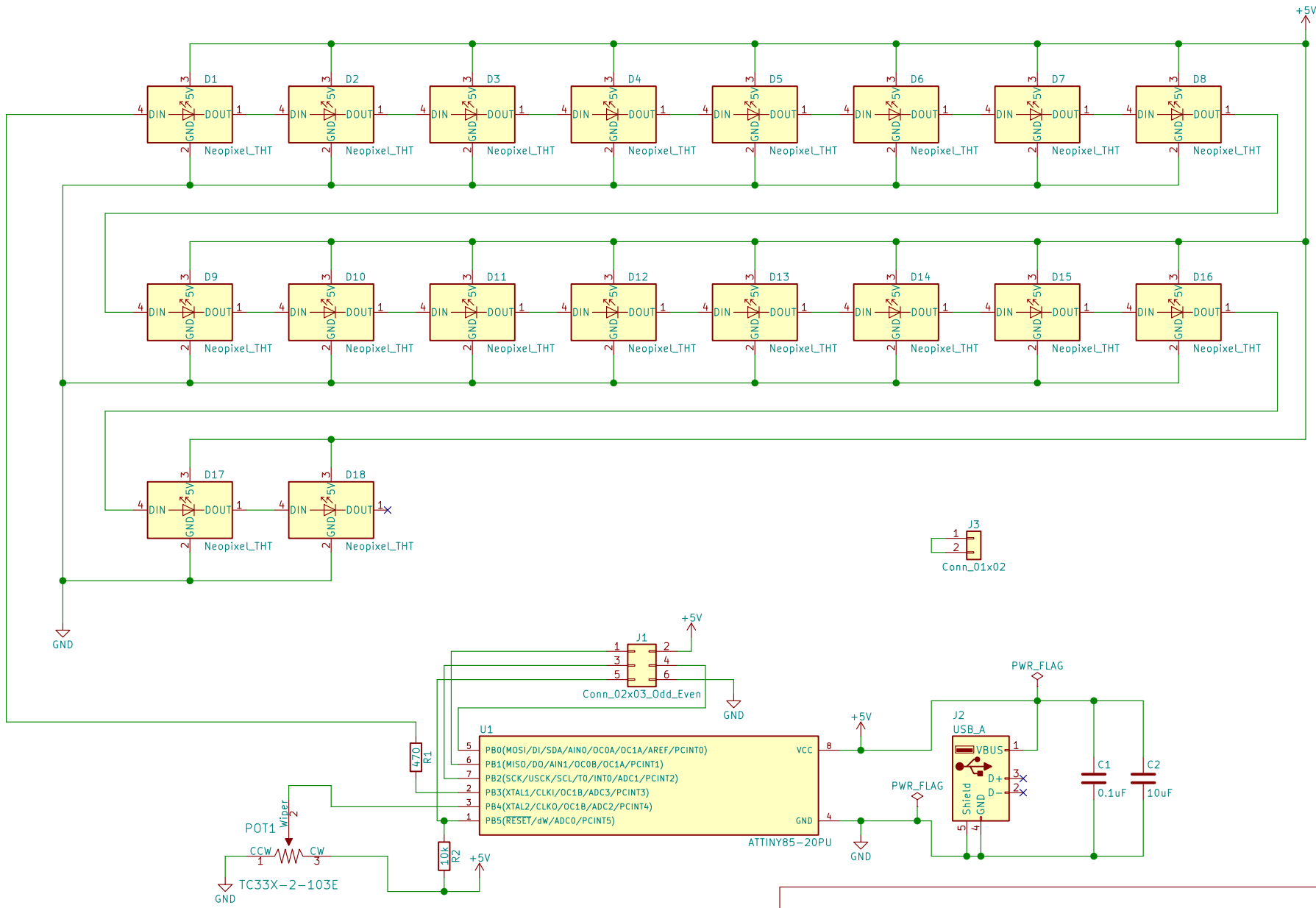

Patrick Pelletier

Sheet: /

File: Butterfly.sch

Title: Butterfly Nightlight

Size: USLetter	Date: 2018-01-18	Rev: 1.0
KiCad E.D.A. kicad 4.0.7		Id: 1/1