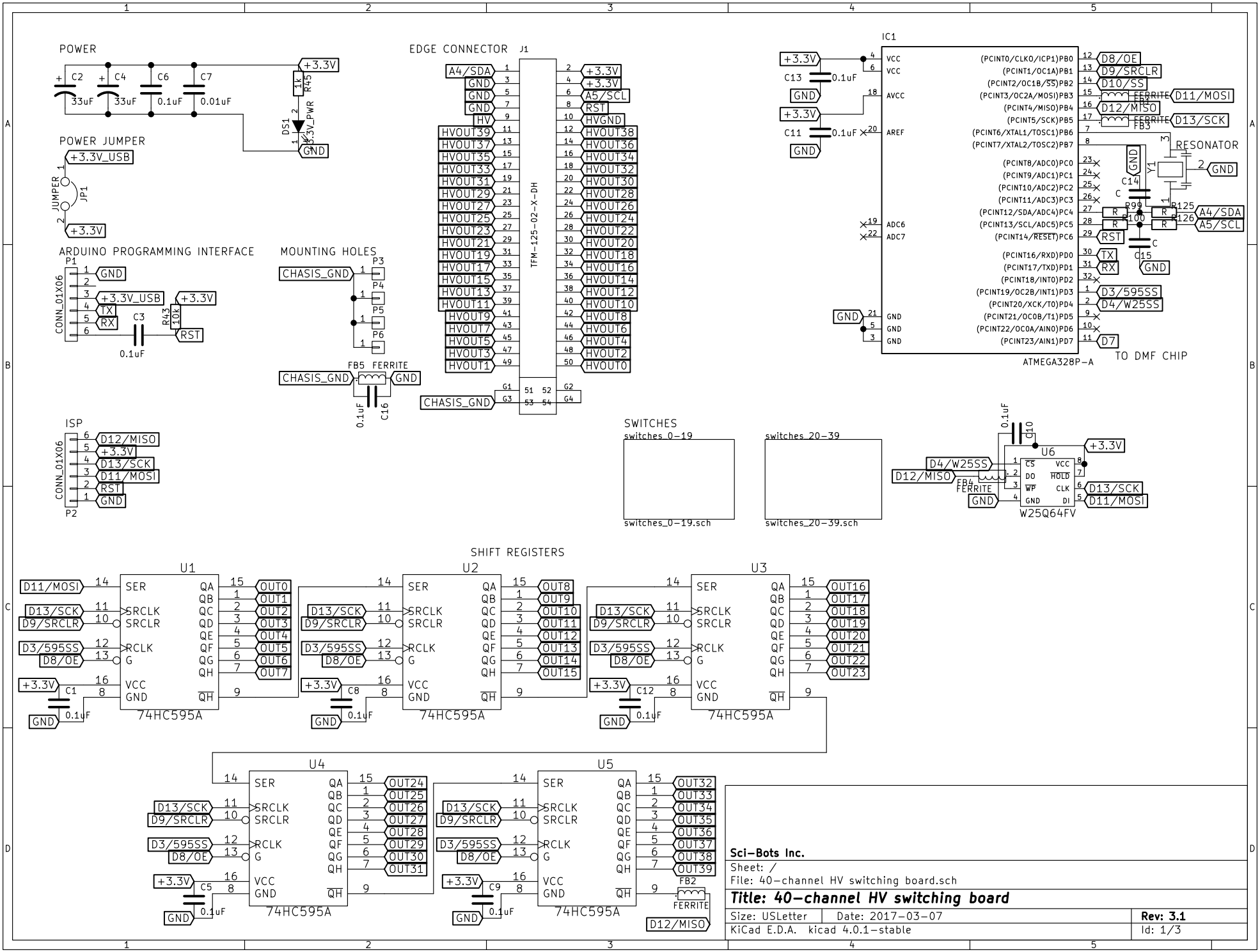
POWER
C2 33uF
C4 33uF
C6 0.1uF
C7 0.01uF
+3.3V
R45 1k
DS1
+3.3V_PWR
GND
POWER JUMPER
+3.3V_USB
JUMPER
JP1
+3.3V
ARDUINO PROGRAMMING INTERFACE
P1
CONN_01X06
GND
+3.3V_USB
TX
RX
C3 0.1uF
R43 10k
+3.3V
RST
MOUNTING HOLES
CHASIS_GND
P3
P4
P5
P6
FB5 FERRITE
CHASIS_GND
GND
0.1uF
C16
EDGE CONNECTOR J1
TFM-125-02-X-DH
A4/SDA
A5/SCL
RST
HVGND
HVOUT39
HVOUT37
HVOUT35
HVOUT33
HVOUT31
HVOUT29
HVOUT27
HVOUT25
HVOUT23
HVOUT21
HVOUT19
HVOUT17
HVOUT15
HVOUT13
HVOUT11
HVOUT9
HVOUT7
HVOUT5
HVOUT3
HVOUT1
HVOUT38
HVOUT36
HVOUT34
HVOUT32
HVOUT30
HVOUT28
HVOUT26
HVOUT24
HVOUT22
HVOUT20
HVOUT18
HVOUT16
HVOUT14
HVOUT12
HVOUT10
HVOUT8
HVOUT6
HVOUT4
HVOUT2
HVOUT0
IC1
ATMEGA328P-A
C13 0.1uF
C11 0.1uF
(PCINT0/CLKO/ICP1)PB0 D8/OE
(PCINT1/OC1A)PB1 D9/SRCLR
(PCINT2/OC1B/SS)PB2 D10/SS
(PCINT3/OC2A/MOSI)PB3 FB1 FERRITE D11/MOSI
(PCINT4/MISO)PB4 D12/MISO
(PCINT5/SCK)PB5 FB3 FERRITE D13/SCK
(PCINT6/XTAL1/TOSC1)PB6
(PCINT7/XTAL2/TOSC2)PB7
RESONATOR
Y1
C14
C15
R99
R100
R125
R126
A4/SDA
A5/SCL
RST
TX
RX
D3/595SS
D4/W25SS
D7
TO DMF CHIP
ISP
CONN_01X06
P2
D12/MISO
D13/SCK
D11/MOSI
SWITCHES
switches_0-19
switches_0-19.sch
switches_20-39
switches_20-39.sch
U6
W25Q64FV
D4/W25SS
D12/MISO
FB4 FERRITE
D13/SCK
D11/MOSI
SHIFT REGISTERS
U1
U2
U3
U4
U5
74HC595A
SER
SRCLK
SRCLR
RCLK
G
VCC
GND
QA
QB
QC
QD
QE
QF
QG
QH
D11/MOSI
D13/SCK
D9/SRCLR
D3/595SS
D8/OE
+3.3V
C1 0.1uF
C8 0.1uF
C12 0.1uF
C5 0.1uF
C9 0.1uF
OUT0
OUT1
OUT2
OUT3
OUT4
OUT5
OUT6
OUT7
OUT8
OUT9
OUT10
OUT11
OUT12
OUT13
OUT14
OUT15
OUT16
OUT17
OUT18
OUT19
OUT20
OUT21
OUT22
OUT23
OUT24
OUT25
OUT26
OUT27
OUT28
OUT29
OUT30
OUT31
OUT32
OUT33
OUT34
OUT35
OUT36
OUT37
OUT38
OUT39
FB2 FERRITE
D12/MISO
Sci-Bots Inc.
Sheet: /
File: 40-channel HV switching board.sch
Title: 40-channel HV switching board
Size: USLetter
Date: 2017-03-07
Rev: 3.1
KiCad E.D.A. kicad 4.0.1-stable
Id: 1/3