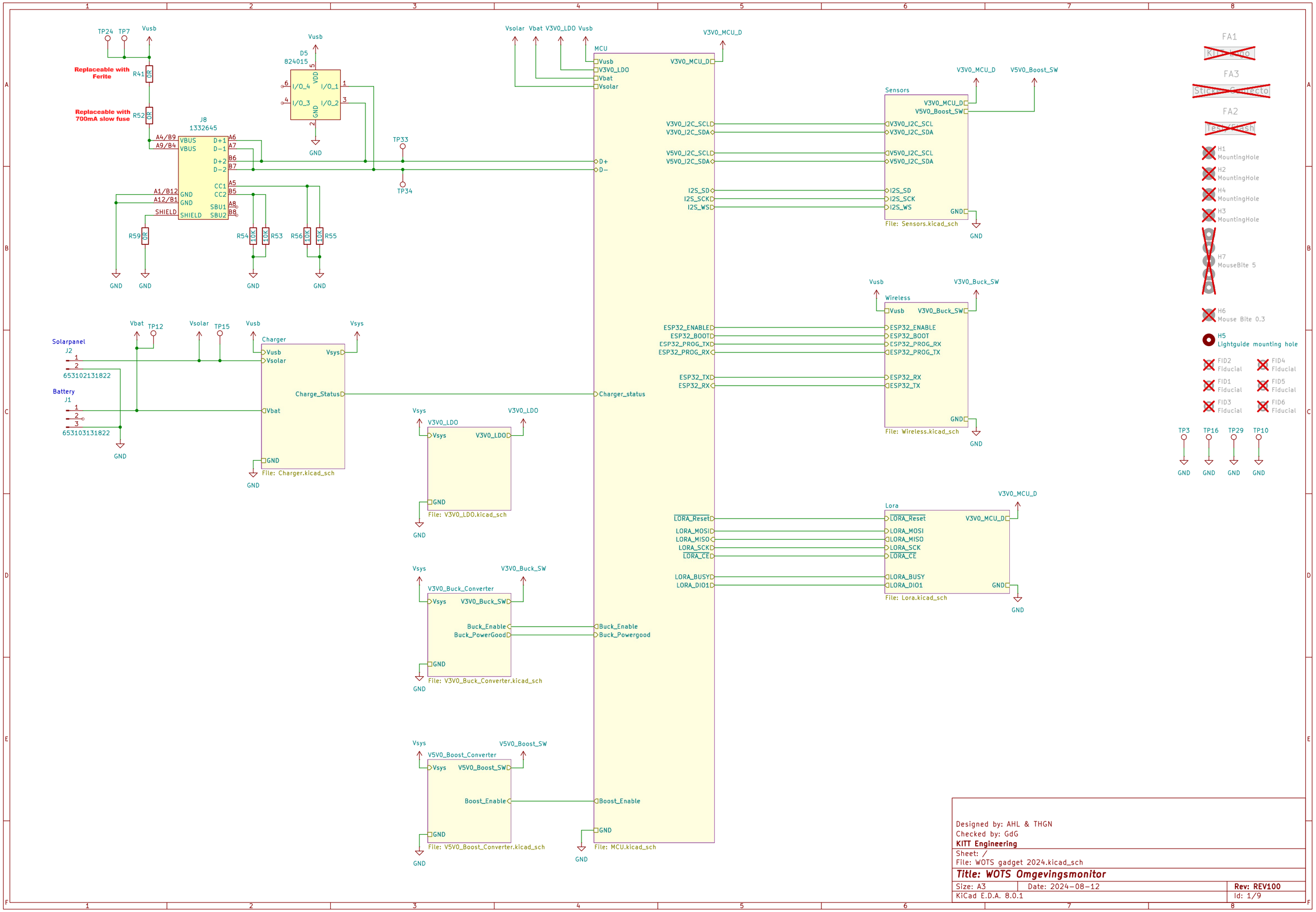

Designed by: AHL & THGN
Checked by: GdG
KITT Engineering

Sheet: /
File: WOTS gadget 2024.kicad_sch

Title: WOTS Omgevingsmonitor

Size: A3	Date: 2024-08-12	**Rev: REV100**
KiCad E.D.A. 8.0.1		Id: 1/9

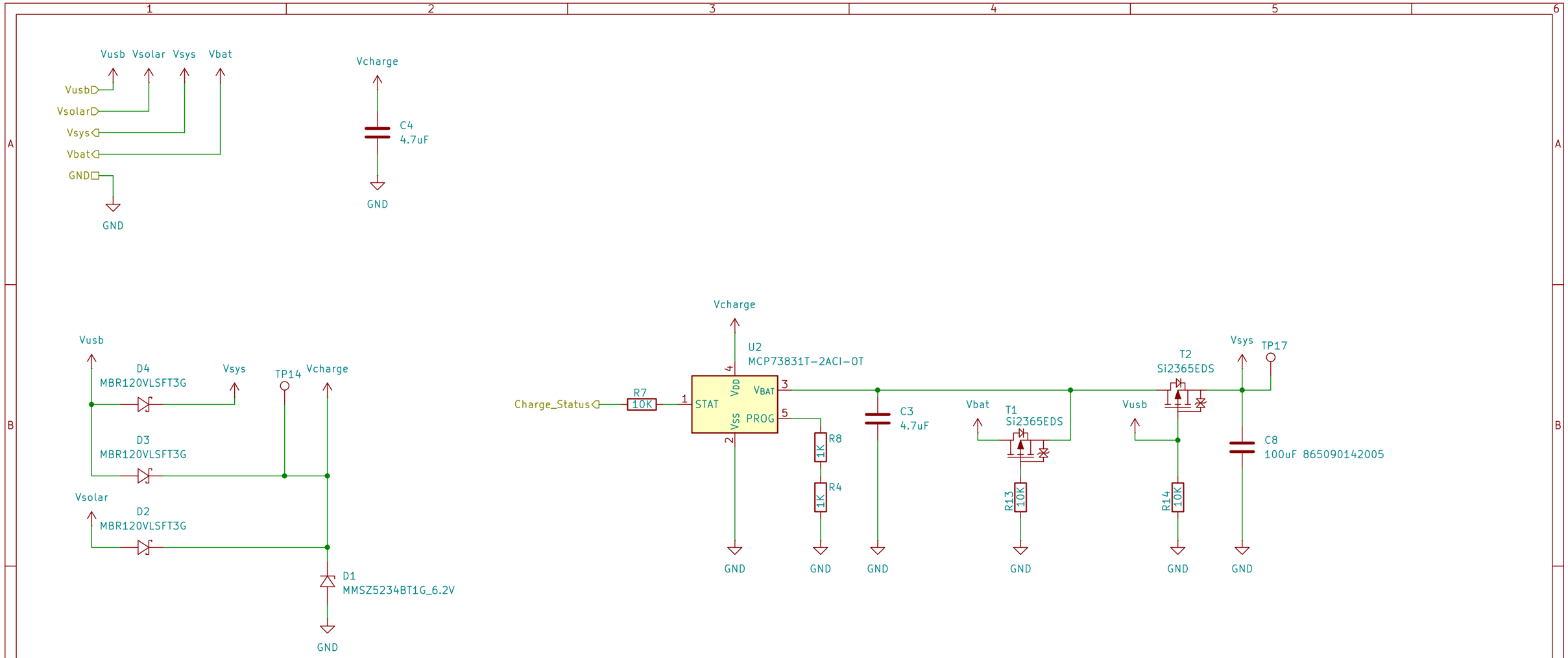

Designed by: AHL & THGN
Checked by: GdG
KITT Engineering

Sheet: /Charger/
File: Charger.kicad_sch

Title: WOTS Omgevingsmonitor

Size: A4	Date: 2024-08-12	**Rev: REV100**
KiCad E.D.A. 8.0.1		Id: 1/9

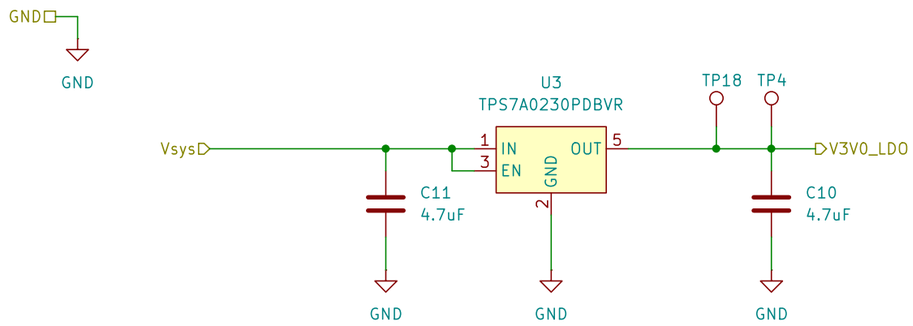

Designed by: AHL & THGN
Checked by: GdG
KITT Engineering

Sheet: /V3V0_LDO/
File: V3V0_LDO.kicad_sch

Title: WOTS Omgevingsmonitor

Size: A4	Date: 2024-08-12	**Rev: REV100**
KiCad E.D.A. 8.0.1		Id: 3/9

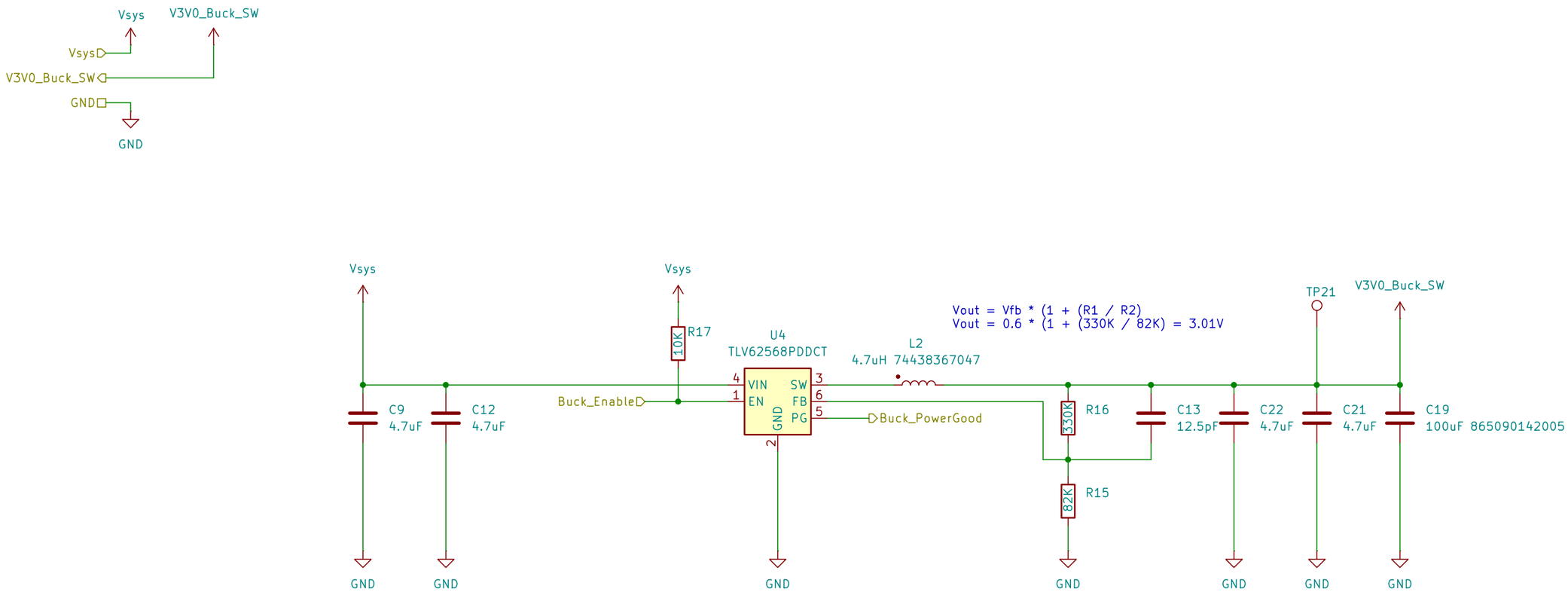

Designed by: AHL & THGN
Checked by: GdG
KITT Engineering

Sheet: /V3V0_Buck_Converter/
File: V3V0_Buck_Converter.kicad_sch

Title: WOTS Omgevingsmonitor

Size: A4	Date: 2024-08-12	**Rev: REV100**
KiCad E.D.A. 8.0.1		Id: 1/9

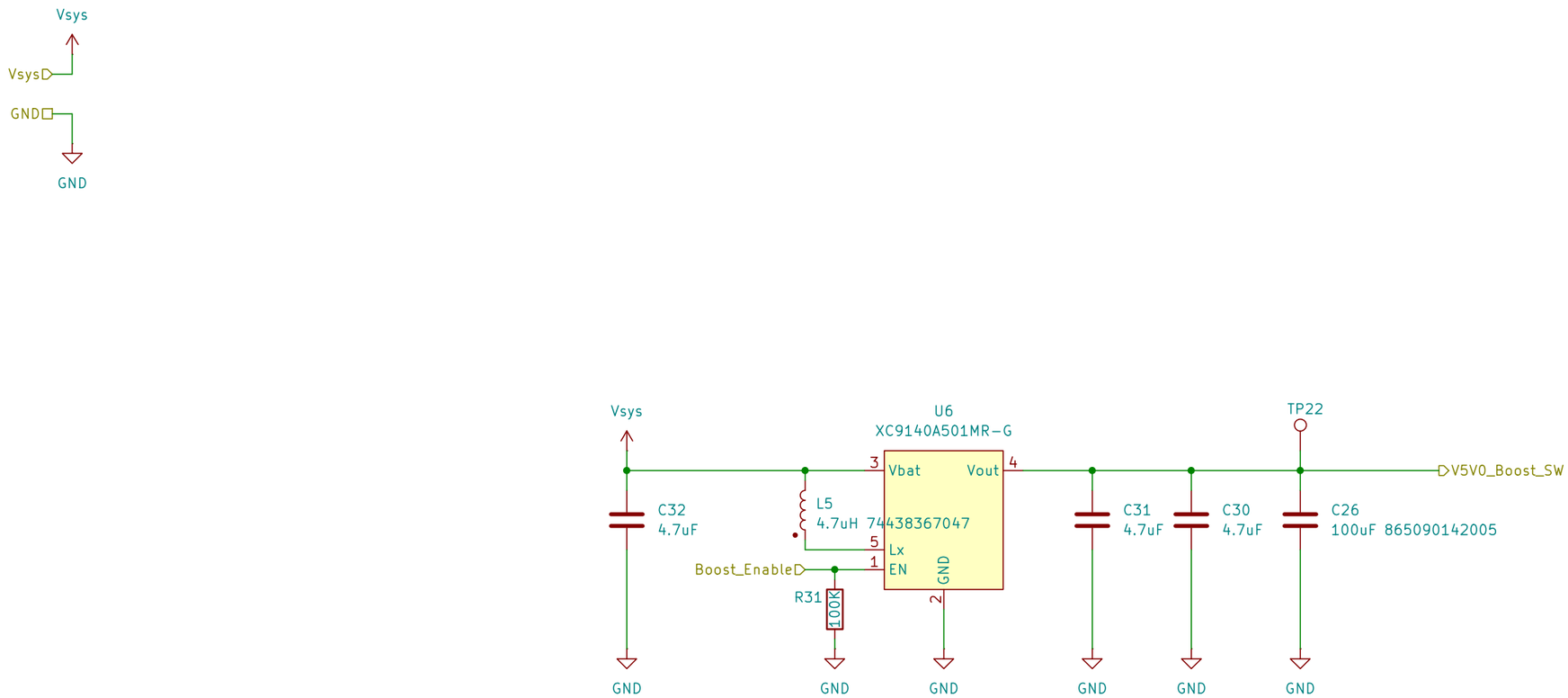

Designed by: AHL & THGN
Checked by: GdG
KITT Engineering

Sheet: /V5V0_Boost_Converter/
File: V5V0_Boost_Converter.kicad_sch

Title: WOTS Omgevingsmonitor

Size: A4	Date: 2024-08-12	**Rev: REV100**
KiCad E.D.A. 8.0.1		Id: 1/9

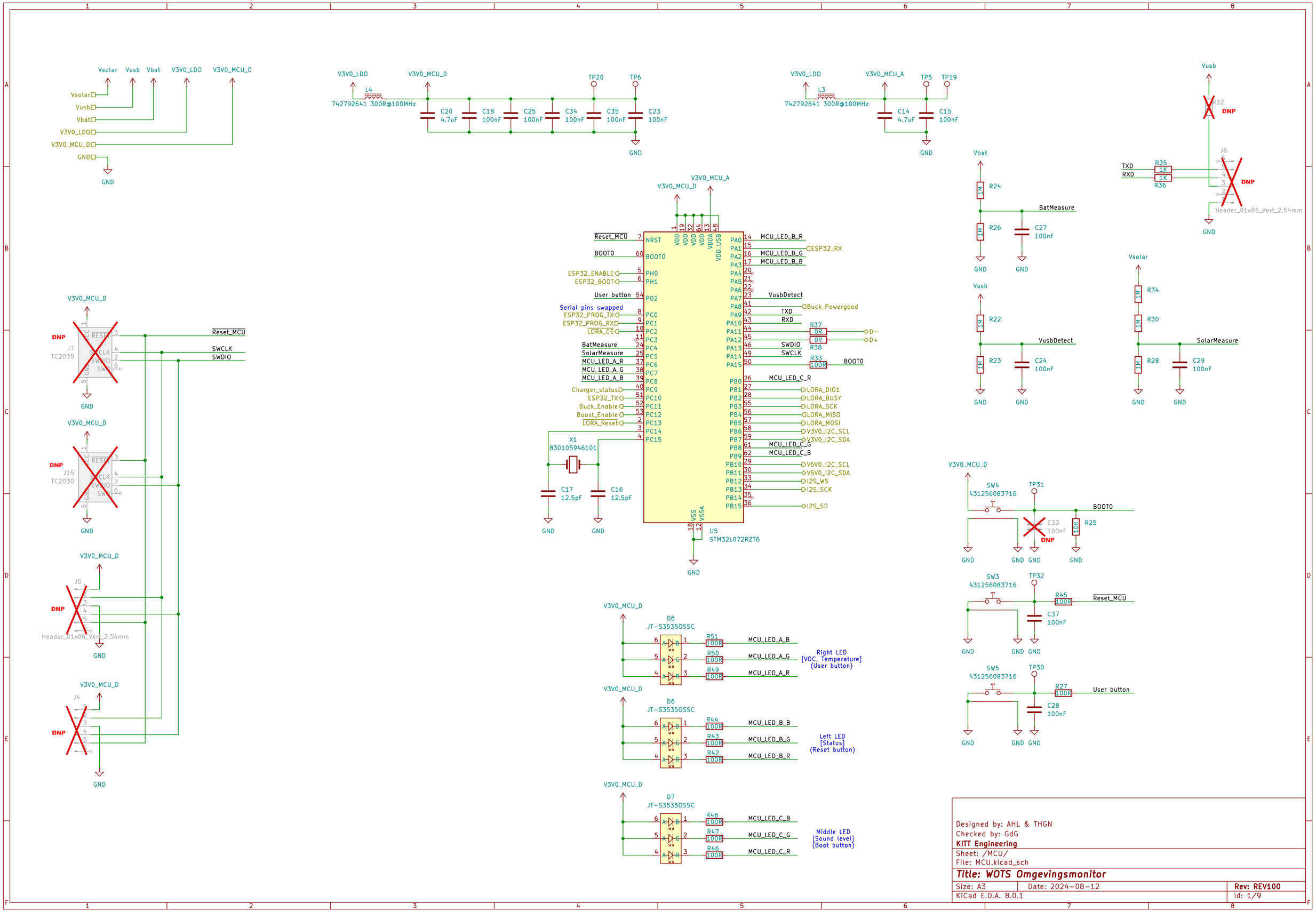
Vsolar Vusb Vbat V3V0_LDO V3V0_MCU_D
GND
V3V0_LDO L4 742792641 300R@100MHz V3V0_MCU_D
C20 4.7uF C18 100nF C25 100nF C34 100nF C35 100nF C23 100nF
TP20 TP6
V3V0_LDO L3 742792641 300R@100MHz V3V0_MCU_A
C14 4.7uF C15 100nF
TP5 TP19
Vusb R32 DNP
J6 DNP Header_01x06_Vert_2.54mm
TXD R35 1K
RXD R36 1K
Vbat R24 1M R26 1M BatMeasure C27 100nF
Vusb R22 1M R23 1M VusbDetect C24 100nF
Vsolar R34 1M R30 1M R28 1M SolarMeasure C29 100nF
V3V0_MCU_D V3V0_MCU_A
Reset_MCU BOOT0 ESP32_ENABLE ESP32_BOOT User button
Serial pins swapped
ESP32_PROG_TX ESP32_PROG_RX LORA_CE BatMeasure SolarMeasure MCU_LED_A_R MCU_LED_A_G MCU_LED_A_B Charger_status ESP32_TX Buck_Enable Boost_Enable LORA_Reset
NRST BOOT0 PH0 PH1 PD2 PC0 PC1 PC2 PC3 PC4 PC5 PC6 PC7 PC8 PC9 PC10 PC11 PC12 PC13 PC14 PC15
VDD VDD VDD VDD VDDA VDD_USB VSS VSSA
PA0 PA1 PA2 PA3 PA4 PA5 PA6 PA7 PA8 PA9 PA10 PA11 PA12 PA13 PA14 PA15
PB0 PB1 PB2 PB3 PB4 PB5 PB6 PB7 PB8 PB9 PB10 PB11 PB12 PB13 PB14 PB15
MCU_LED_B_R ESP32_RX MCU_LED_B_G MCU_LED_B_B VusbDetect Buck_Powergood TXD RXD SWDIO SWCLK BOOT0 MCU_LED_C_R LORA_DIO1 LORA_BUSY LORA_SCK LORA_MISO LORA_MOSI V3V0_I2C_SCL V3V0_I2C_SDA MCU_LED_C_G MCU_LED_C_B V5V0_I2C_SCL V5V0_I2C_SDA I2S_WS I2S_SCK I2S_SD
R37 0R D- R38 0R D+ R33 100R
X1 830105946101 C17 12.5pF C16 12.5pF
U5 STM32L072RZT6
J7 TC2030 DNP
J15 TC2030 DNP
J5 DNP Header_01x06_Vert_2.54mm
J4 DNP
SW4 431256083716 TP31 BOOT0 C33 100nF DNP R25 10K
SW3 431256083716 TP32 R45 100R Reset_MCU C37 100nF
SW5 431256083716 TP30 R27 100R User button C28 100nF
D8 JT-S3535OSSC R51 100R MCU_LED_A_B R50 100R MCU_LED_A_G R49 100R MCU_LED_A_R
Right LED [VOC, Temperature] (User button)
D6 JT-S3535OSSC R44 100R MCU_LED_B_B R43 100R MCU_LED_B_G R42 100R MCU_LED_B_R
Left LED [Status] (Reset button)
D7 JT-S3535OSSC R48 100R MCU_LED_C_B R47 100R MCU_LED_C_G R46 100R MCU_LED_C_R
Middle LED [Sound level] (Boot button)
Designed by: AHL & THGN
Checked by: GdG
KITT Engineering
Sheet: /MCU/
File: MCU.kicad_sch
Title: WOTS Omgevingsmonitor
Size: A3
Date: 2024-08-12
Rev: REV100
KiCad E.D.A. 8.0.1
Id: 1/9

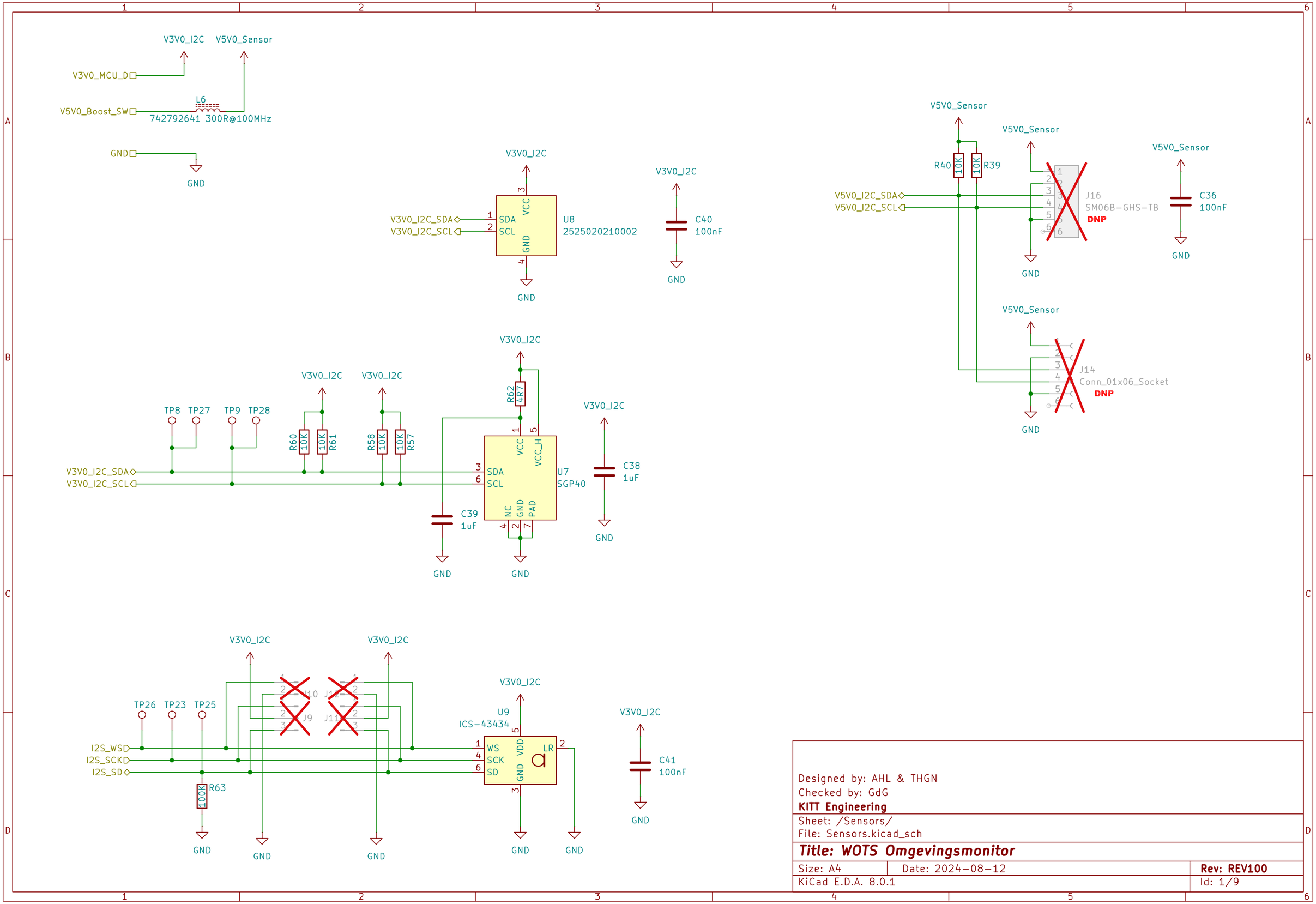
V3V0_I2C
V5V0_Sensor
V3V0_MCU_D
V5V0_Boost_SW
L6
742792641 300R@100MHz
GND
V3V0_I2C_SDA
V3V0_I2C_SCL
SDA
SCL
VCC
GND
U8
2525020210002
C40
100nF
R40
10K
R39
J16
SM06B-GHS-TB
DNP
C36
100nF
J14
Conn_01x06_Socket
TP8
TP27
TP9
TP28
R60
R61
R58
R57
R62
4R7
VCC_H
U7
SGP40
NC
PAD
C38
1uF
C39
TP26
TP23
TP25
J10
J12
J9
J11
I2S_WS
I2S_SCK
I2S_SD
R63
100K
U9
ICS-43434
WS
SCK
SD
VDD
LR
C41
100nF
Designed by: AHL & THGN
Checked by: GdG
KITT Engineering
Sheet: /Sensors/
File: Sensors.kicad_sch
Title: WOTS Omgevingsmonitor
Size: A4
Date: 2024-08-12
Rev: REV100
KiCad E.D.A. 8.0.1
Id: 1/9

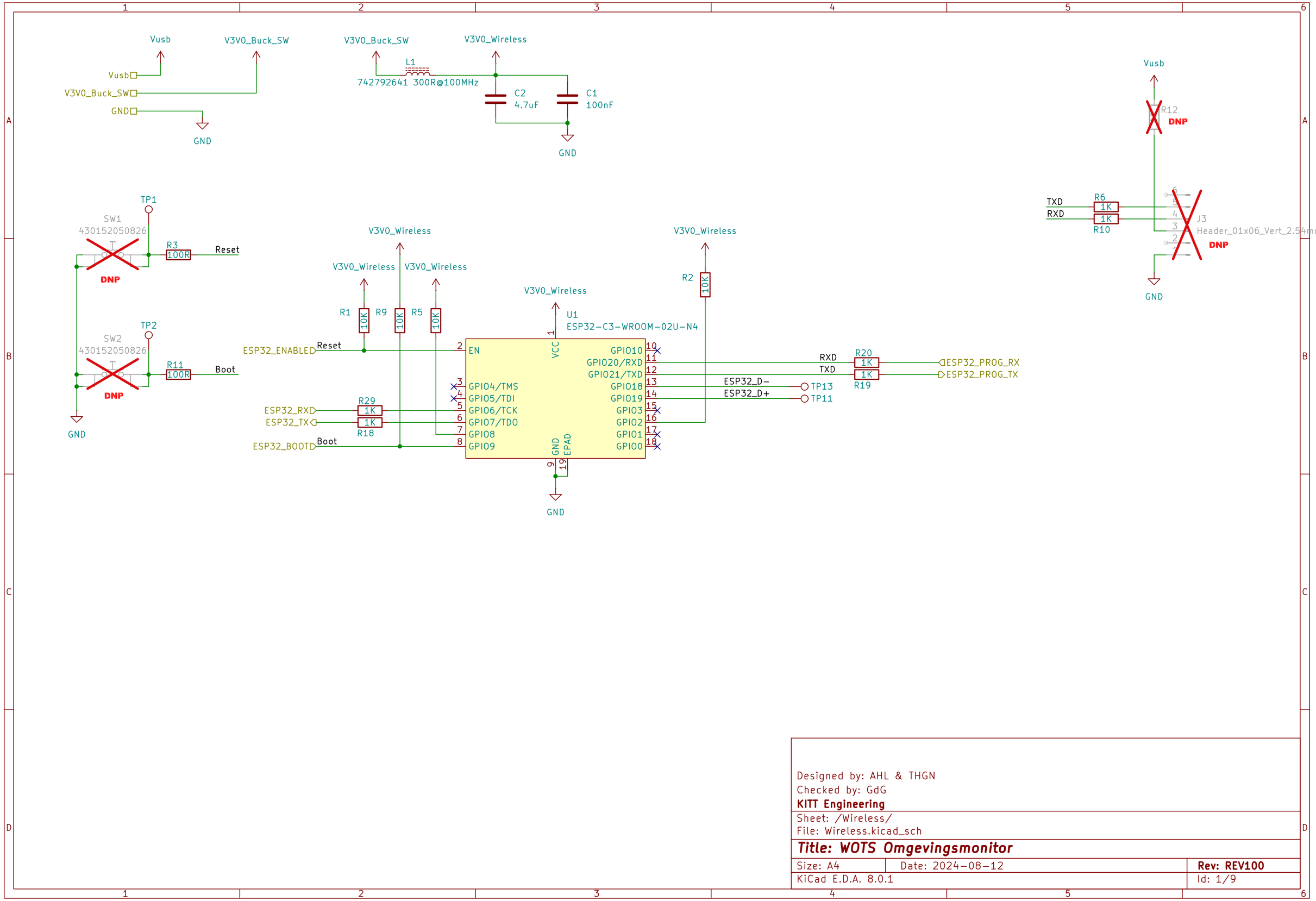

Designed by: AHL & THGN
Checked by: GdG
KITT Engineering

Sheet: /Wireless/
File: Wireless.kicad_sch

Title: WOTS Omgevingsmonitor

Size: A4	Date: 2024-08-12	**Rev: REV100**
KiCad E.D.A. 8.0.1		Id: 1/9

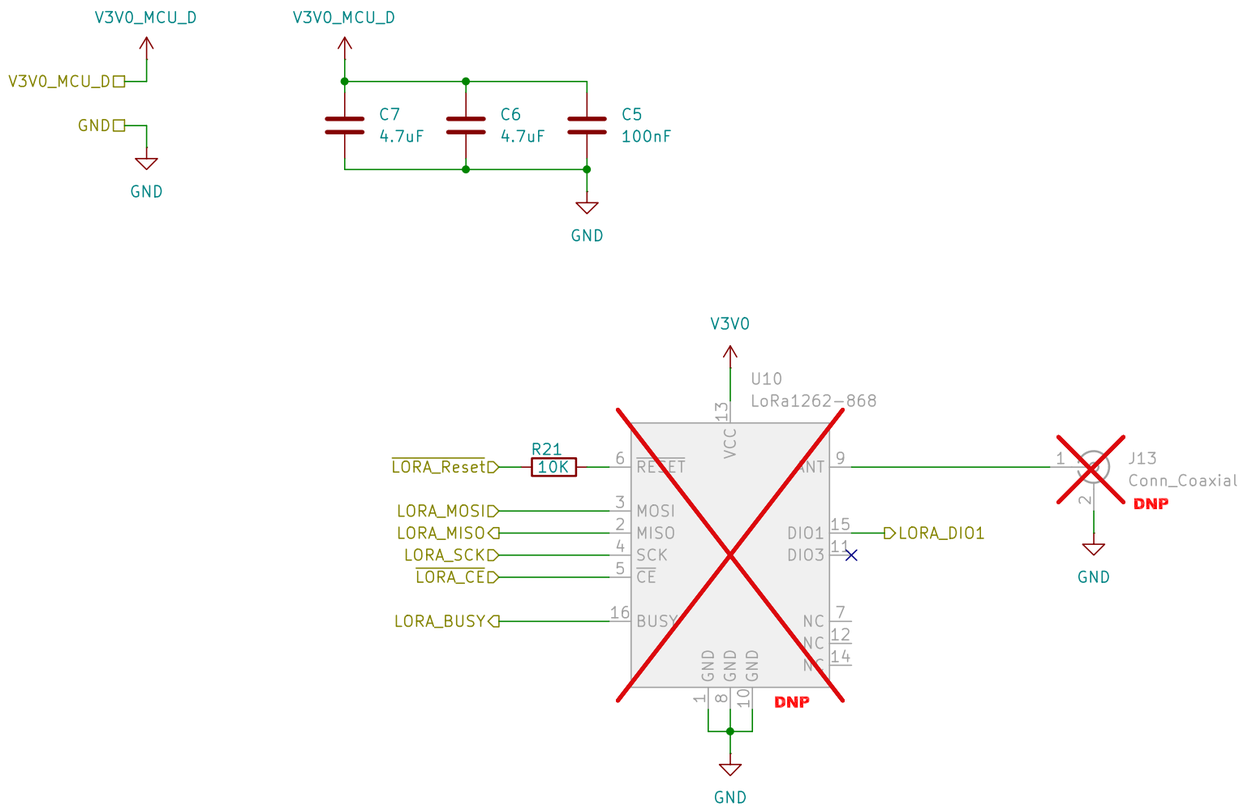

Designed by: AHL & THGN
Checked by: GdG
KITT Engineering

Sheet: /Lora/
File: Lora.kicad_sch

Title: WOTS Omgevingsmonitor

Size: A4	Date: 2024-08-12	**Rev: REV100**
KiCad E.D.A. 8.0.1		Id: 1/9