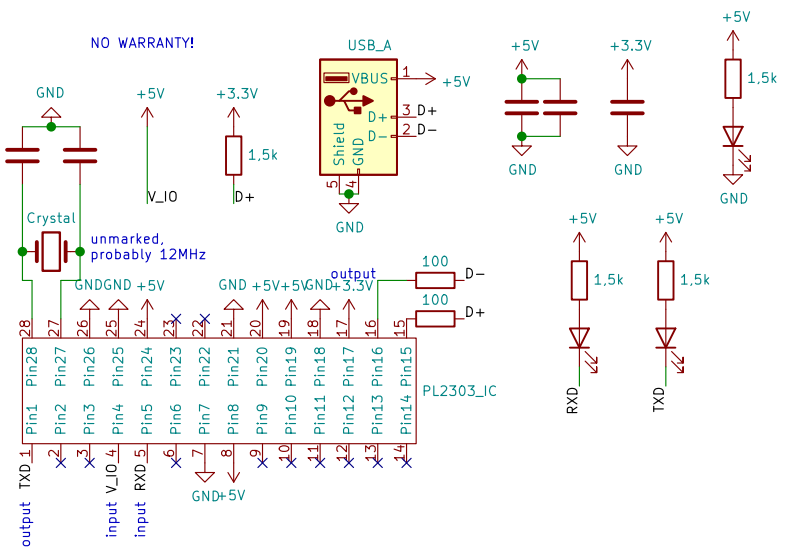

There are several PL2303xy, not sure which version is used
on the board i looked at.
That's why i did not label the pins properly.

reversed schematic of PL2303 USB to serial board
(c) 2022 by kittennbfive – https://github.com/kittennbfive/
CC BY-SA 4.0

Sheet: /
File: schematic_PL2303_module.sch

Title:

Size: A4	Date:	**Rev:**
KiCad E.D.A. eeschema 5.1.9+dfsg1-1+deb11u1		Id: 1/1