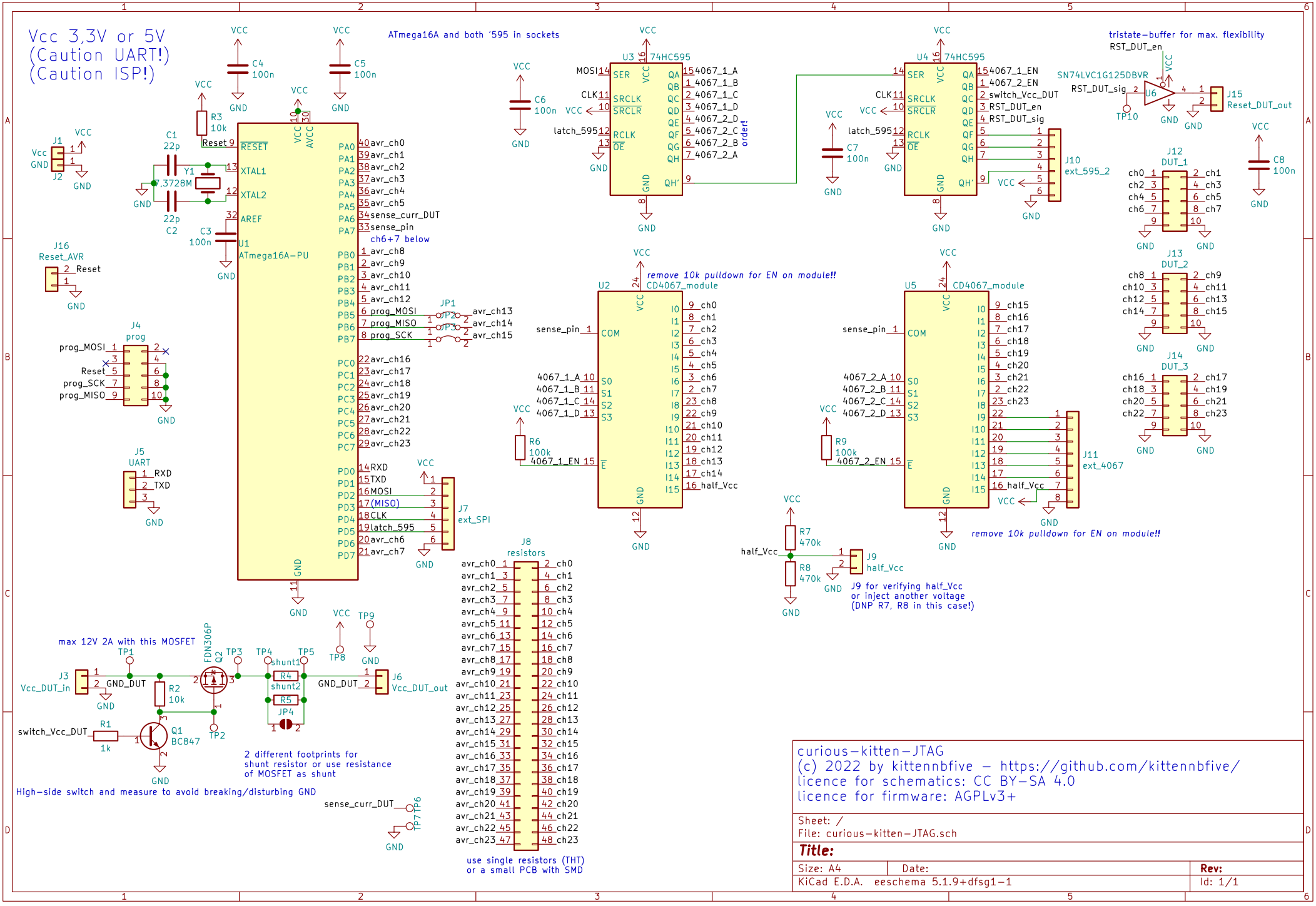
Vcc 3,3V or 5V
(Caution UART!)
(Caution ISP!)
ATmega16A and both '595 in sockets
U1
ATmega16A-PU
U2
CD4067_module
U3
74HC595
U4
74HC595
U5
CD4067_module
remove 10k pulldown for EN on module!!
tristate-buffer for max. flexibility
SN74LVC1G125DBVR
J10
ext_595_2
J11
ext_4067
J7
ext_SPI
J8
resistors
use single resistors (THT)
or a small PCB with SMD
J9 for verifying half_Vcc
or inject another voltage
(DNP R7, R8 in this case!)
max 12V 2A with this MOSFET
FDN306P
2 different footprints for
shunt resistor or use resistance
of MOSFET as shunt
High-side switch and measure to avoid breaking/disturbing GND
curious-kitten-JTAG
(c) 2022 by kittennbfive - https://github.com/kittennbfive/
licence for schematics: CC BY-SA 4.0
licence for firmware: AGPLv3+
Sheet: /
File: curious-kitten-JTAG.sch
Title:
Size: A4
Date:
Rev:
KiCad E.D.A. eeschema 5.1.9+dfsg1-1
Id: 1/1