PROCESS CONTROL SYSTEMS

12

LEARNING ACTIVITY PACKET

DIFFERENTIAL PRESSURE FLOW MEASUREMENT AND CONTROL

IST™
AMATROL
INTEGRATED SYSTEMS TECHNOLOGY

33256-XD

DIFFERENTIAL PRESSURE FLOW MEASUREMENT AND CONTROL

INTRODUCTION

Although there are a number of methods for measuring flow, differential pressure flow measurement is one of the most common methods used to measure flow in a process. Differential pressure flow sensors are versatile (can measure most low viscosity fluids and many gasses) and low cost when compared to other types of flow sensors.

This LAP covers three of the most common types of differential pressure sensors: orifice plates, venturi tubes, and pitot tubes. Also covered is the differential pressure transmitter, which converts the pressure signal from these sensors to an analog electrical signal.

ITEMS NEEDED

Amatrol Supplied

- 1 T5552 Process Control Learning System
- 1 T5552 Documentation
- 1 T5552-F1 Smart Flow Transmitter
- 1 T5552-F1A Pitot Tube Flow Sensor
- 1 T5552-F1B Venturi Tube Flow Sensor
- 1 T5552-F1C Orifice Plate Flow Sensor

Amatrol or School Supplied

- 1 Loop Calibrator (Optional)
- 1 5/32 Allen Wrench

School Supplied

- 1 Water Supply (10 Gallons)
- 1 Compressed Air Supply
- 1 Digital Multimeter

FIRST EDITION, LAP 12, REV. A

Amatrol, AMNET, CIMSOFT, MCL, MINI-CIM, IST, ITC, VEST, and Technovate are trademarks or registered trademarks of Amatrol, Inc. All other brand and product names are trademarks or registered trademarks of their respective companies.

Copyright © 2007 by AMATROL, INC.

All rights Reserved. No part of this publication may be reproduced, translated, or transmitted in any form or by any means, electronic, optical, mechanical, or magnetic, including but not limited to photographing, photocopying, recording or any information storage and retrieval system, without written permission of the copyright owner.

Amatrol,Inc., P.O. Box 2697, Jeffersonville, IN 47131 USA, Ph 812-288-8285, FAX 812-283-1584 www.amatrol.com

TABLE OF CONTENTS

SEGMENT 1 ORIFICE PLATE FLOW SENSORS 4

OBJECTIVE 1 Describe how differential pressure is used to measure flow
OBJECTIVE 2 Describe the function of differential pressure flow sensors and name four types
OBJECTIVE 3 Describe the operation of an orifice plate flow sensor
OBJECTIVE 4 Describe three types of orifice plates
Activity 1 Differential Pressure Flow Sensor Familiarization

SEGMENT 2 DIFFERENTIAL PRESSURE FLOW TRANSMITTERS 19

OBJECTIVE 5 Describe the function of a differential pressure flow transmitter
OBJECTIVE 6 Describe the operation of a differential pressure flow transmitter
OBJECTIVE 7 Describe how to bleed the manifold of a differential pressure flow transmitter
OBJECTIVE 8 Describe how to calibrate a differential pressure flow transmitter
SKILL 1 Measure flow using an orifice plate flow sensor and a differential pressure flow transmitter

SEGMENT 3 COMMON DIFFERENTIAL PRESSURE FLOW SENSORS 52

OBJECTIVE 9 Describe the operation of a flow nozzle
OBJECTIVE 10 Describe the operation of a venturi tube
SKILL 2 Measure flow using a venturi tube flow sensor and a differential pressure flow transmitter
OBJECTIVE 11 Describe the operation of a pitot tube
SKILL 3 Measure flow using a pitot tube flow sensor and a differential pressure flow transmitter

SEGMENT 4 FLOW CONTROL USING DIFFERENTIAL PRESSURE FLOW MEASUREMENT 74

OBJECTIVE 12 Describe the operation of a closed loop flow system using a differential pressure flow sensor
SKILL 4 Construct and operate a flow control loop using a differential pressure sensor

Copyright © 2007 Amatrol, Inc.

SEGMENT 1

ORIFICE PLATE FLOW SENSORS

OBJECTIVE 1 DESCRIBE HOW DIFFERENTIAL PRESSURE IS USED TO MEASURE FLOW

Fluid flow through a pipe can be determined by measuring the pressure drop across a restriction placed inside the pipe, as figure 1 shows. This pressure drop is referred to as the differential pressure, or ΔP.

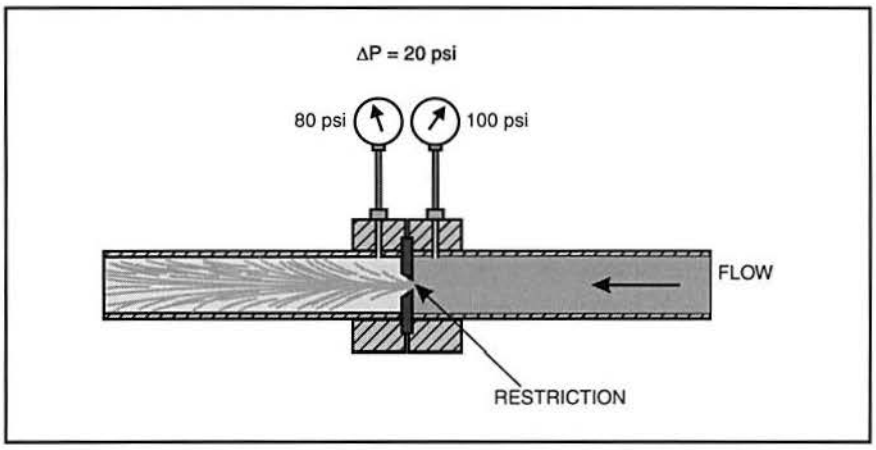

Figure 1. A Restriction in a Pipe Results in Decreased Pressure

The flow rate through this restriction is proportional to the square root of the differential pressure. This relationship is used in the following formula to convert differential pressure to volumetric flow rate.

FORMULA: DIFFERENTIAL PRESSURE TO VOLUMETRIC FLOW

$$Q = kA\sqrt{\frac{\Delta P}{\rho}}$$

Where:

Q = *Volumetric Flow Rate*
k = *Constant*
A = *Cross-Sectional Area of Pipe*
ΔP = *Differential Pressure*
ρ = *Density of Fluid*

Copyright © 2007 Amatrol, Inc.

The constant k, also known as the "k factor," is unique to the size, shape, and type of orifice used. It is determined experimentally, but manufacturers typically publish the k factor of their sensors.

To convert a differential pressure signal into a signal in units of volumetric flow, a transmitter with a square root extractor function is used. This function calculates the square root of the differential pressure to create a linear signal that is proportional to flow. Figure 2 shows the symbol used on P&ID diagrams to indicate a square root extractor function.

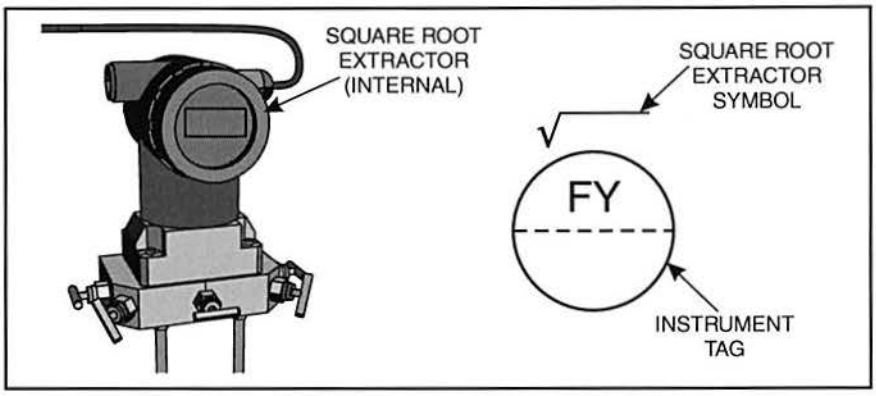

Figure 2. Transmitter with Square Root Extractor Function

Copyright © 2007 Amatrol, Inc.

OBJECTIVE 2 DESCRIBE THE FUNCTION OF DIFFERENTIAL PRESSURE FLOW SENSORS AND NAME FOUR TYPES

There are a number of differential pressure sensors, each varying in cost and efficiency. The type of flow sensor chosen for a process requires consideration of several factors such as the material the process line will carry (solid, liquid, or gas), the amount of acceptable error, and the cost. Figure 3 shows four types of differential pressure flow sensors:

- Orifice Plate
- Venturi Tube
- Pitot Tube
- Flow Nozzle

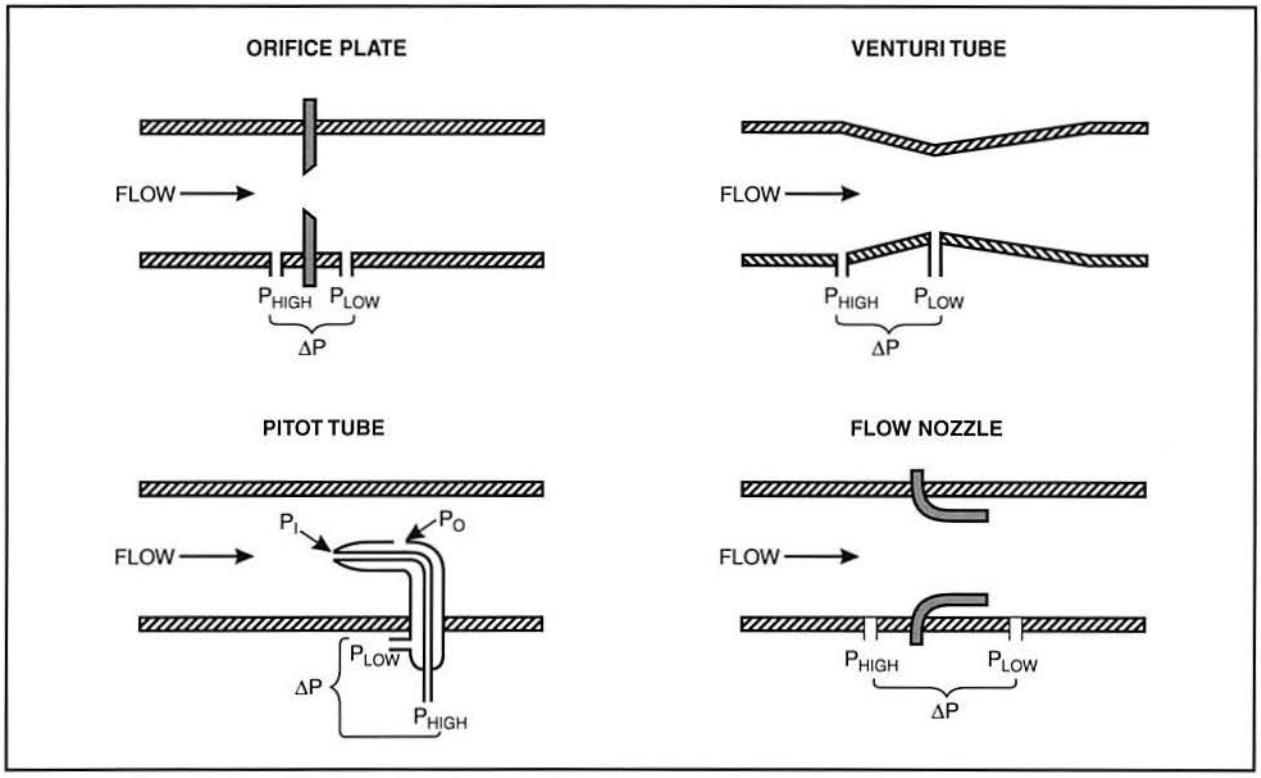

Figure 3. Four Types of Differential Pressure Flow Sensors

Copyright © 2007 Amatrol, Inc.

OBJECTIVE 3 DESCRIBE THE OPERATION OF AN ORIFICE PLATE FLOW SENSOR

Orifice plate flow sensors usually consist of an orifice plate and two stainless steel flanges. The orifice plate is a flat plate or disk with a hole through which fluid can flow. The two flanges are bolted together to enclose the orifice plate, as shown in figure 4.

Pressure taps are typically located on the flanges to measure upstream and downstream pressure.

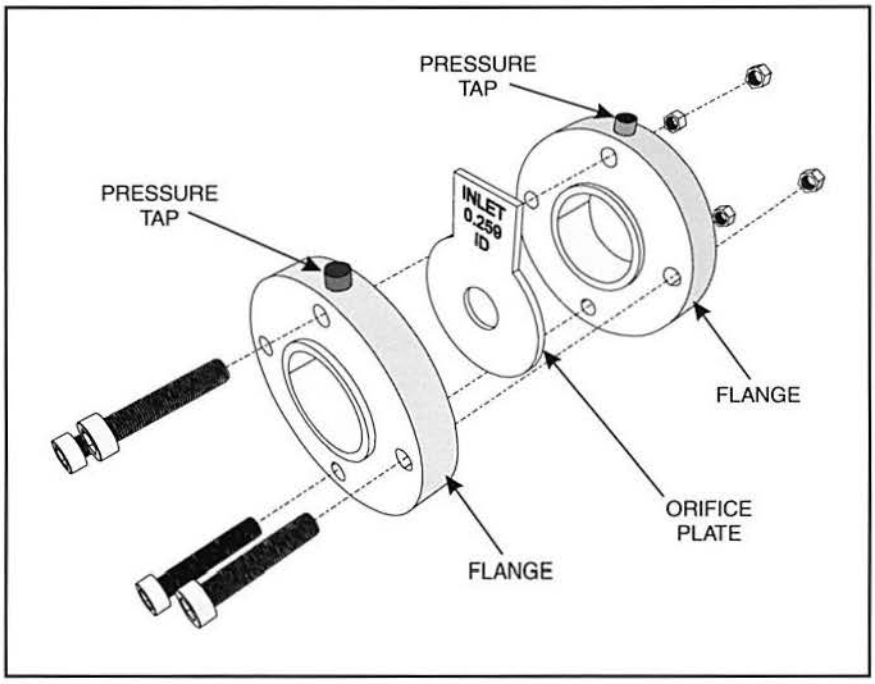

Figure 4. Orifice Plate Construction

The orifice plate creates a restriction in the flow of a fluid, similar to figure 5.

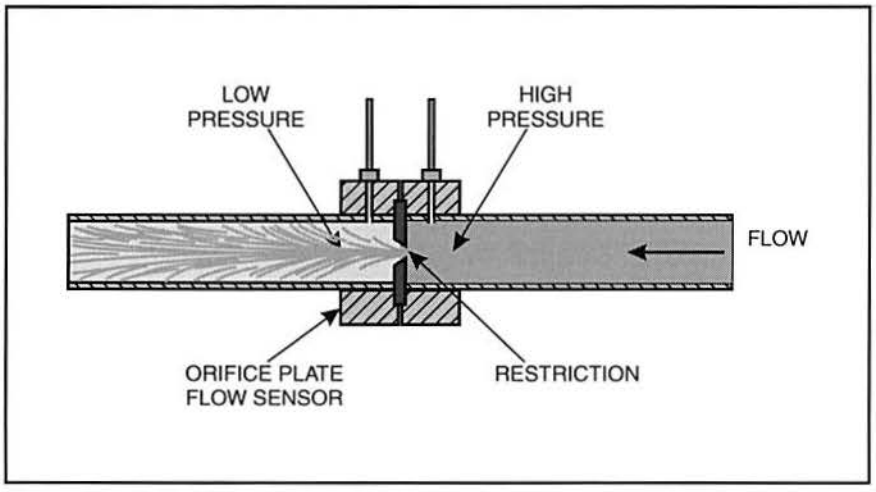

Figure 5. Orifice Plate Flow Sensor

Copyright © 2007 Amatrol, Inc.

Orifice plates are generally unidirectional. However, when the orifice plate flanges enclose the orifice plate, you cannot determine the direction of the fluid flow. Therefore, specifications that indicate the flow direction and the orifice diameter are usually etched on the protruding tab of the orifice plate, which is shown in figure 6.

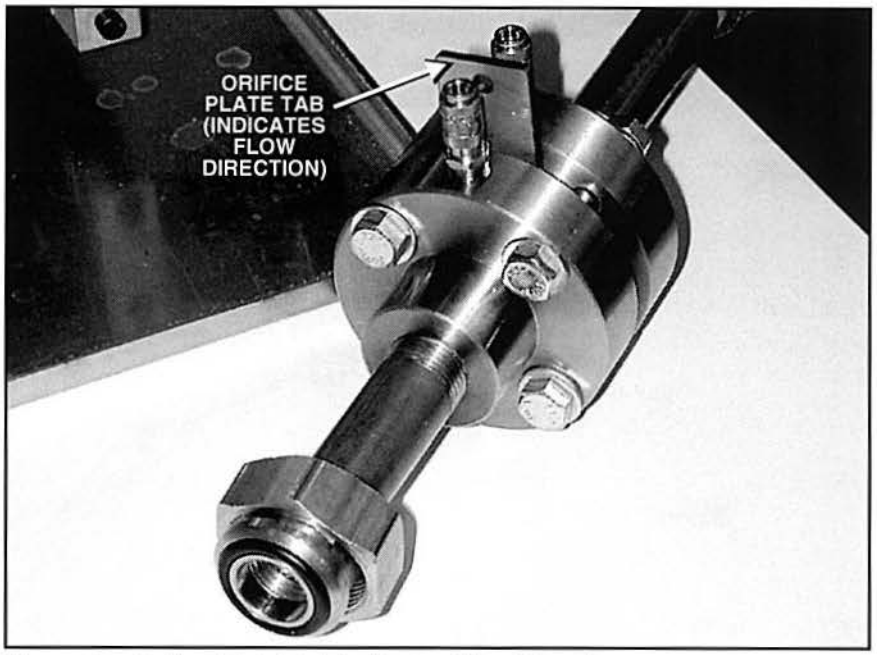

Figure 6. Orifice Plate Tab Indicates Flow Direction

Orifice plates are simple and easy to replace, making them a popular choice for many applications.

Copyright © 2007 Amatrol, Inc.

OBJECTIVE 4 DESCRIBE THREE TYPES OF ORIFICE PLATES

Orifice plates differ from one another in either shape or bore location. Figure 7 shows three common types of orifice plates:

- Concentric
- Eccentric
- Segmental

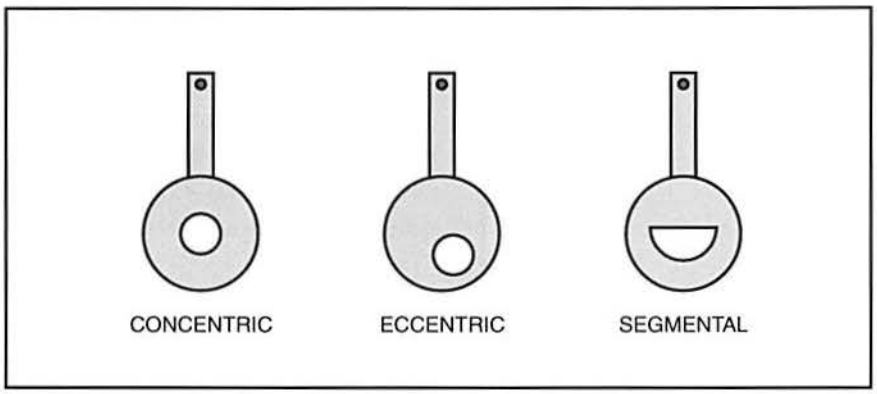

Figure 7. Types of Orifice Plates

The concentric orifice plate contains a hole that is bored concentric (shares the same center line) with the pipe. A concentric plate is most commonly used in process lines containing clean liquids (i.e. no particles) and gases. Concentric plates are preferable because they are easier to manufacture within desired tolerances. Some concentric orifice plates have drain holes to prevent the buildup of condensate in gas streams and vent holes to prevent the buildup of gases in liquid streams. However, the drain and vent holes have limited effectiveness because they may become clogged.

An eccentric or a segmental orifice plate is preferable if the process medium is multiphase (contains at least two of the three phases - gas, liquid, solid particles). The eccentric orifice plate is similar to the concentric orifice except that the orifice is bored off center. This is beneficial in processes that contain a low to medium concentration of the secondary phase (i.e. solid particles inside a liquid) because it reduces the risk of clogging.

When the concentration of the secondary phase is high or there is large particle matter, the segmental orifice plate is preferred over the eccentric orifice plate because it has a larger drainage area. The disadvantage of the eccentric and segmental orifice plates is that they are harder to manufacture within desired tolerances.

Copyright © 2007 Amatrol, Inc.

Orifice plates are simple and cost-effective devices. However, their accuracy may be dramatically affected by factors such as the precision of the bore calculations, the installation quality, and flaws in the piping caused by corrosion or erosion. Any of these factors, and others, may change the flow pattern. Therefore, if you have an application that requires a high level of accuracy, an orifice plate may not be the best choice for differential pressure measurement.

Activity 1. Differential Pressure Flow Sensor Familiarization

Procedure Overview

In this procedure, you will identify the differential pressure flow sensor options for the T5552. You will also remove the paddle wheel flow sensor and install an orifice plate flow sensor. The removal and installation of the other differential pressure sensors is performed in the same manner.

You will need a 5/32 Allen wrench to complete this skill.

- ❑ 1. Go to the T5552.
- ❑ 2. Perform the following substeps to locate the optional differential pressure sensors provided with the T5552.

  You may have only one of these sensors or two or three. They are separately purchased items.

  A. Identify the orifice plate flow sensor shown in figure 8.

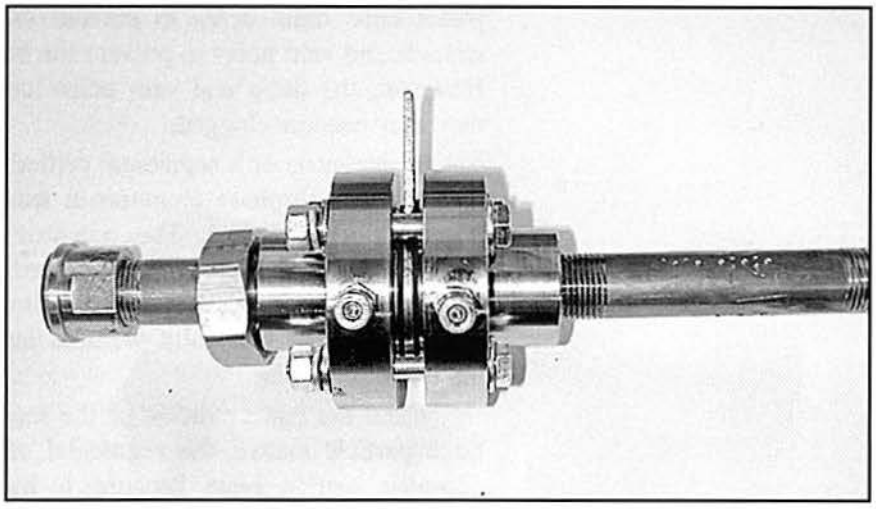

Figure 8. Orifice Plate Flow Sensor

Copyright © 2007 Amatrol, Inc.

B. Identify the pitot tube flow sensor shown in figure 9.

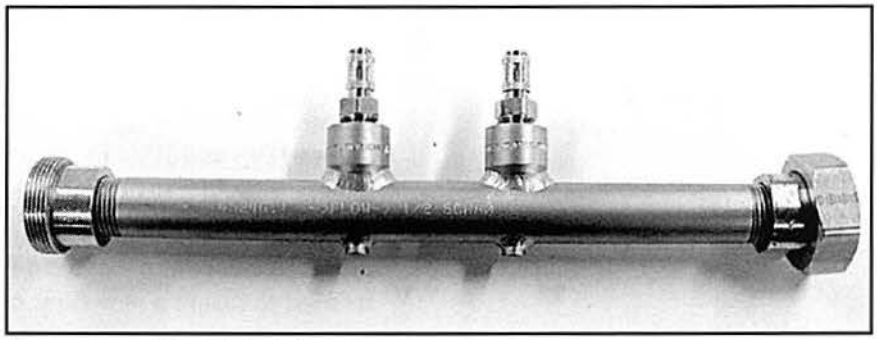

Figure 9. Pitot Tube Flow Sensor

C. Identify the venturi tube flow sensor shown in figure 10.

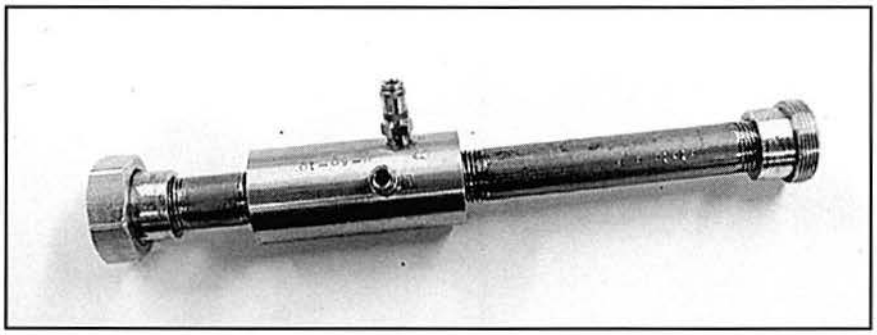

Figure 10. Venturi Tube Flow Sensor

Copyright © 2007 Amatrol, Inc.

❑ 3. Perform the following substeps to install an orifice plate flow sensor.

A. Make sure the main circuit breaker is in the off position and the process tank is empty.

If there is water in the process tank, open the manual tank drain valves HV3 and HV4 to empty the tank. This ensures that there is very little, if any, water in the process lines.

B. Identify the unions, stand-offs, cap assemblies, and cap assembly screws in figures 11 and 12. These components will be used to install a new flow sensor.

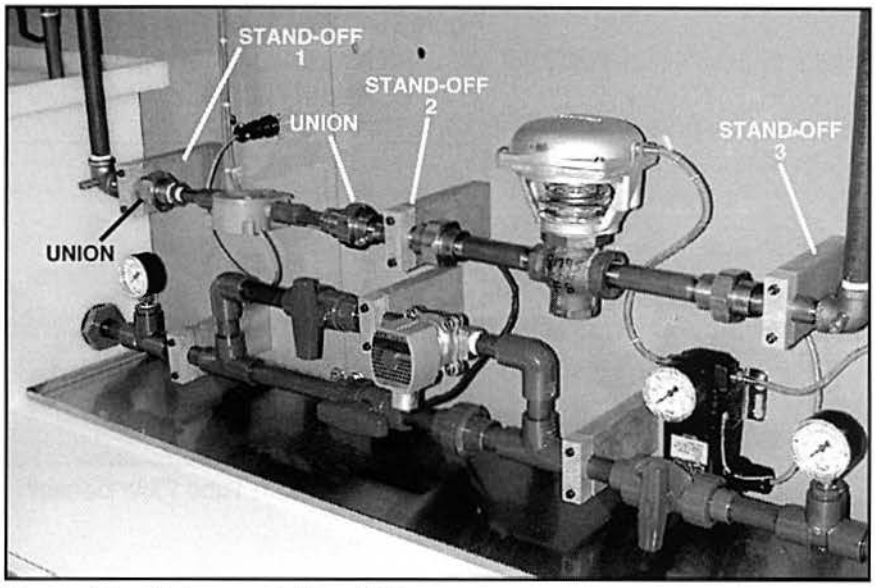

Figure 11. Unions and Stand-Offs

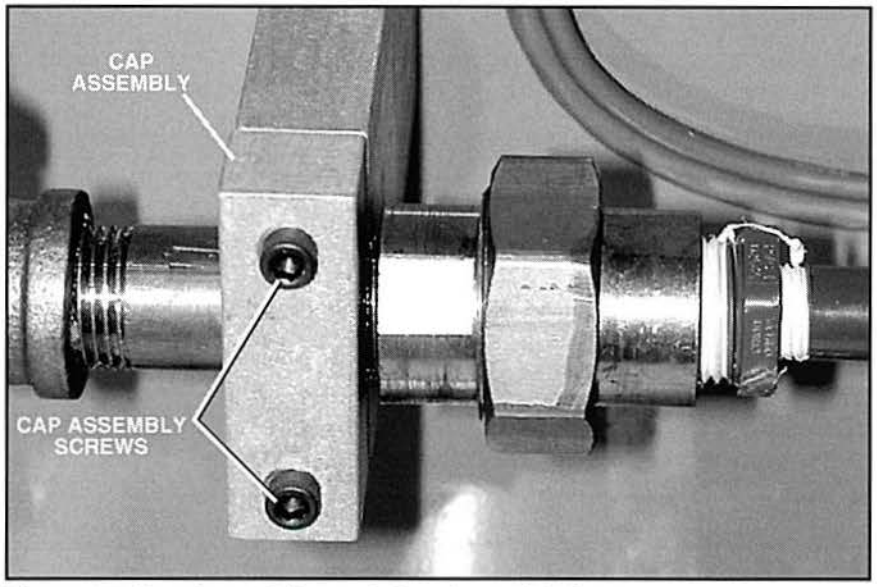

Figure 12. Cap Assemblies and Cap Assembly Screws

Copyright © 2007 Amatrol, Inc.

C. Using the 5/32 Allen wrench, loosen (turn counterclockwise), but do not remove, the cap assembly screws on stand-offs 1, 2, and 3.

   The stand-offs and cap assemblies hold the piping of the process line securely in place. You should notice that there is slight freedom of movement in the piping after the screws are loosened.

D. Loosen the unions on both sides of the paddle-wheel flow sensor by turning them clockwise (top of union rotates towards you).

   You should be able to loosen these by hand. Excess water in the lines may spill into the drain pan as you loosen the unions and remove the sensor. This is normal.

E. Turn the locking collar on the paddlewheel's electrical connector counterclockwise and pull the connector from the T5552 to disconnect it, as shown in figure 13.

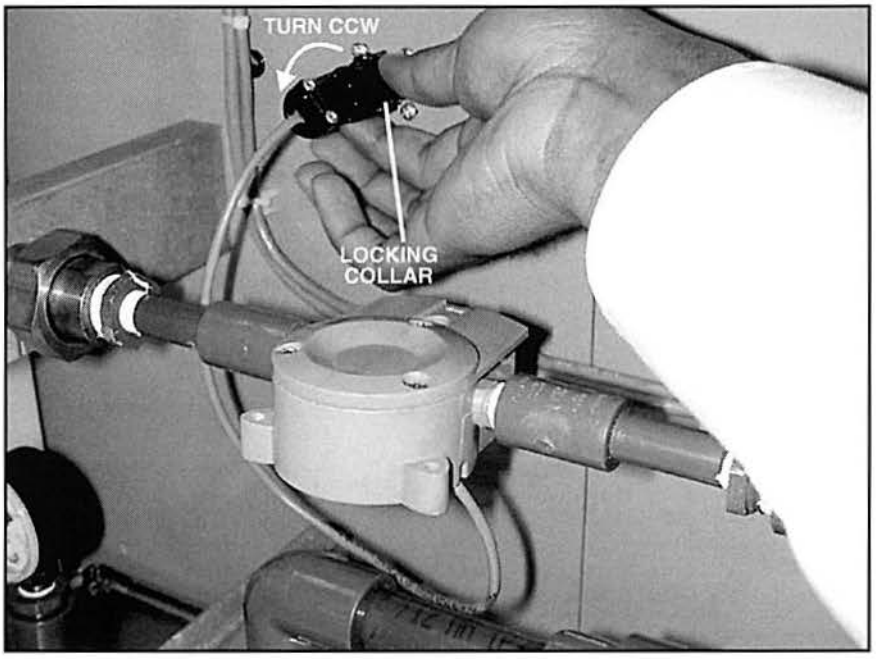

Figure 13. Disconnecting the Paddlewheel Electrical Connector

Copyright © 2007 Amatrol, Inc.

F. Carefully pull the flow sensor away from the process piping, as shown in figure 14.

If the sensor is secured too tightly in the line, pull the process line piping away from the sensor as you remove it.

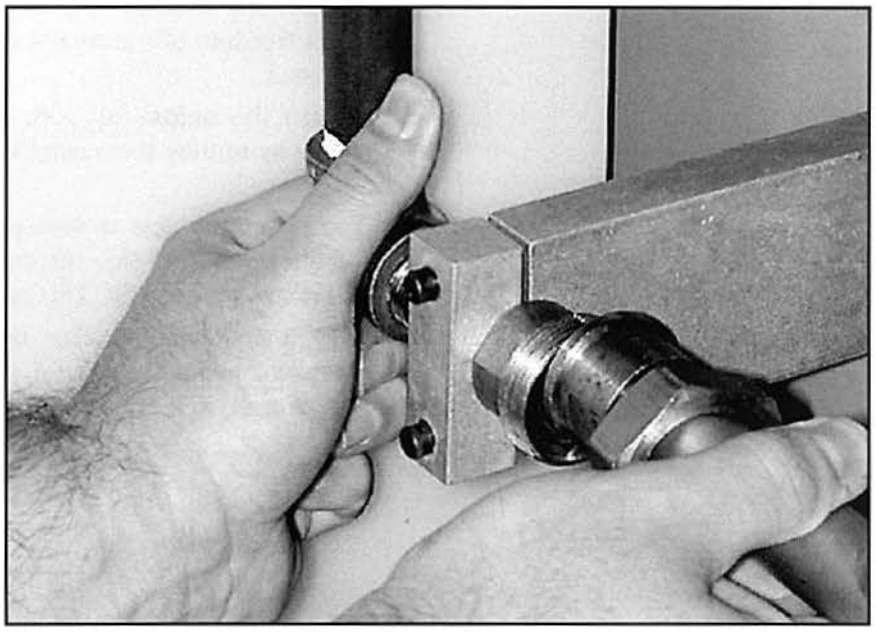

Figure 14. Removing the Flow Sensor from the Process Line

After you remove the paddlewheel flow sensor, you should notice an o-ring in the piping union, as shown in figure 15. The o-ring provides a secure seal when the unions are tightened by hand.

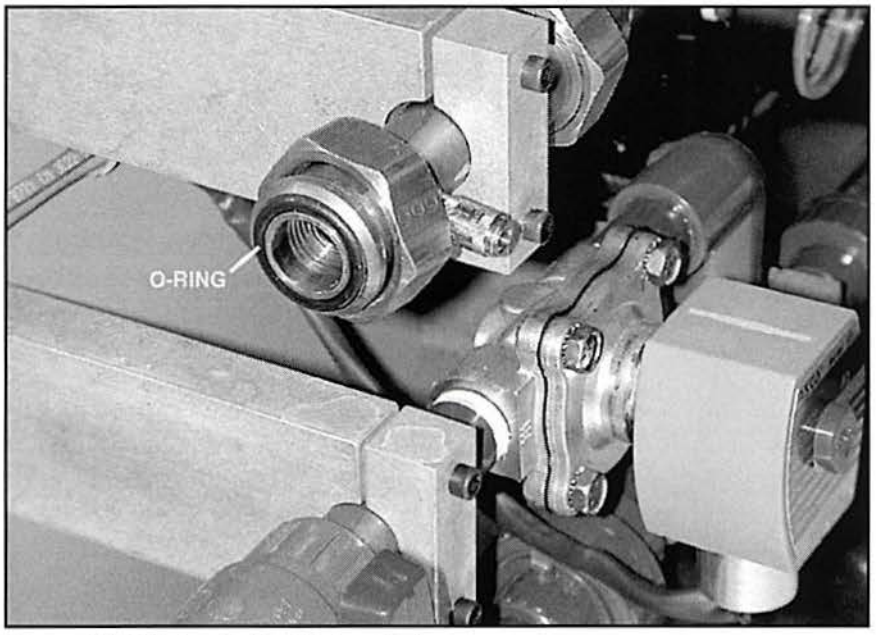

Figure 15. O-Ring in the Piping Union

Copyright © 2007 Amatrol, Inc.

G. Make sure the o-ring is properly seated.

If it is not seated, run your finger along the o-ring, applying pressure to seat it.

H. Orient the orifice plate flow sensor such that the direction of flow indicated on the orifice plate tab corresponds with the direction of flow in the process line, as shown in figure 16.

The inlet side of the orifice plate should be facing the flow. The inlet side is the high pressure side.

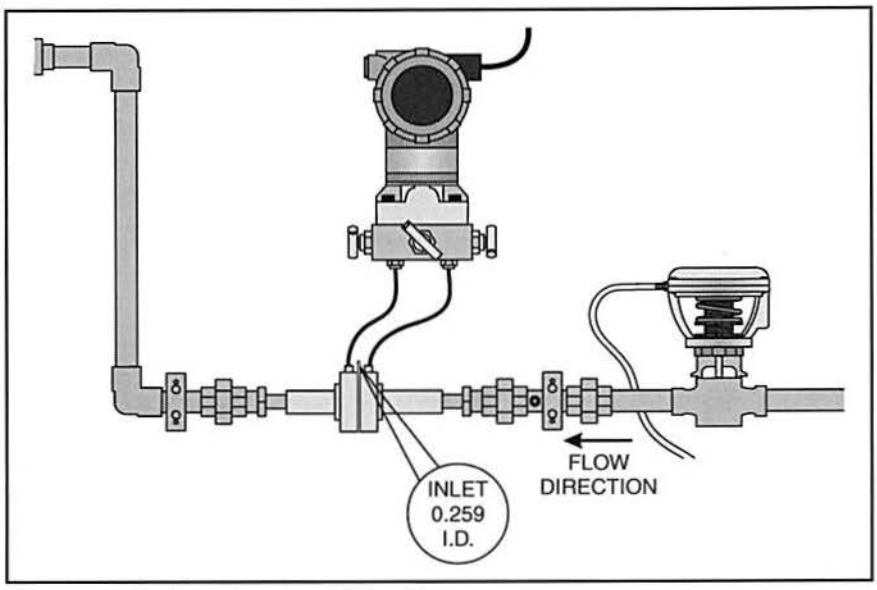

Figure 16. Orifice Plate Inlet Identifier

Copyright © 2007 Amatrol, Inc.

I. Insert the orifice plate flow sensor in the process line in place of the paddlewheel sensor.

If necessary, pull back the process line piping to allow enough space for placement of the orifice plate sensor, as shown in figure 17.

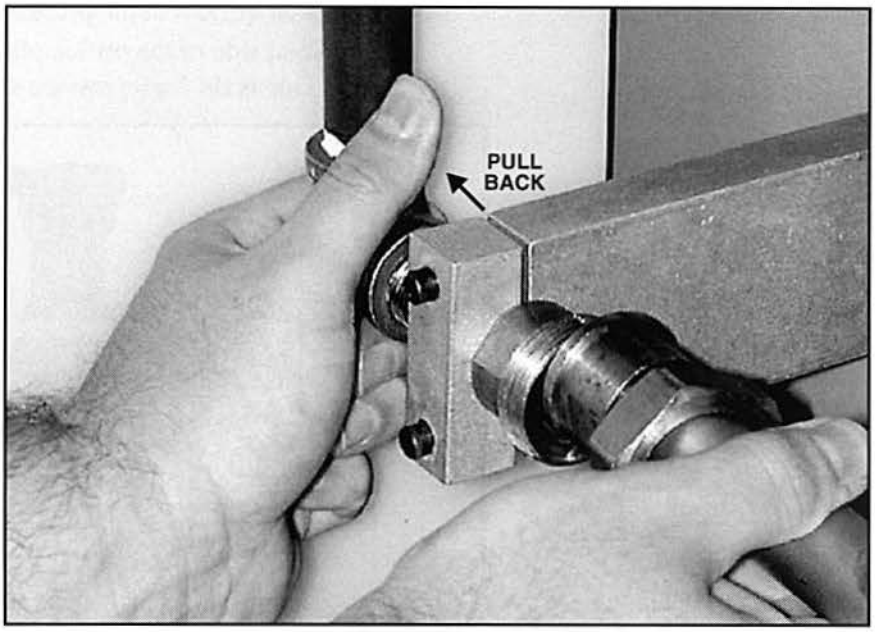

Figure 17. Installing the Flow Sensor from the Process Line

J. Hand-tighten the unions by turning them counterclockwise (top of union rotates away from you).

Do not use a wrench to tighten the unions! This can strip the unions and damage the o-ring inside.

K. Tighten (clockwise) the cap assembly screws on each of the stand-offs using the 5/32 Allen wrench.

The orifice plate should now be secure in the process line.

Copyright © 2007 Amatrol, Inc.

❑ 7. Perform the following substeps to check the sensor installation for leaks.

A. Perform a lockout/tagout.

B. Fill the reservoir tank 3/4 of the tank's maximum height with water.

C. Connect the circuit shown in figure 18.

This circuit connects the circulation pump to a selector switch to cause flow through the process piping.

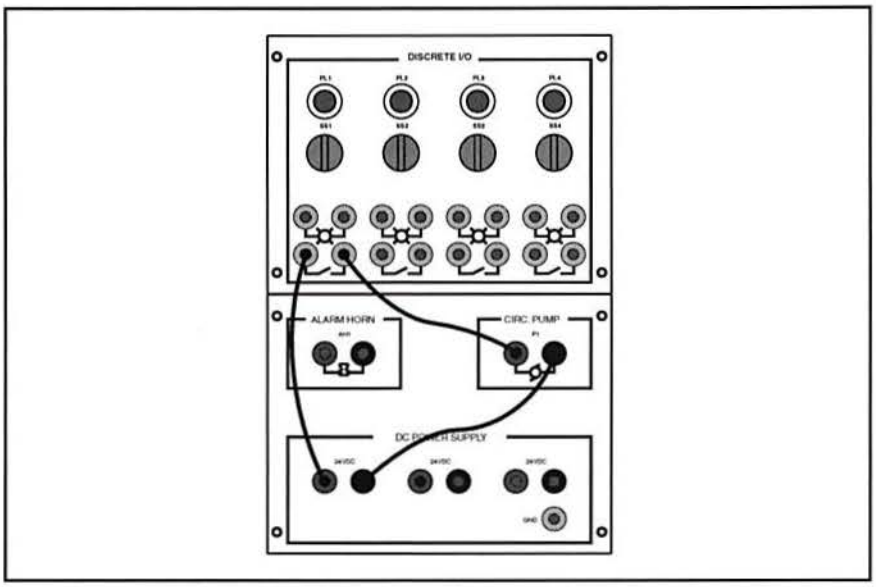

Figure 18. Pump Control Circuit

D. Remove the lockout/tagout.

E. Turn on the main circuit breaker.

F. Turn on selector switch **SS1** to start the circulation pump and allow water to flow through the system.

G. Observe the unions where the sensor is installed to determine if any water leaks.

If water does not leak, the sensor is properly installed. If there is a leak, stop the pump, hand tighten the unions, and recheck for a leak.

H. Turn off selector switch **SS1** to stop the pump.

I. Turn off the main circuit breaker.

J. Disconnect the circuit.

Copyright © 2007 Amatrol, Inc.

SEGMENT 1

SELF REVIEW

1. Fluid flow through a pipe can be determined by measuring the _____ across a restriction placed inside the pipe.

2. The flow sensor chosen for a process requires consideration of several factors including the material the process line carries, the cost, and the amount of acceptable _____.

3. The pressure drop across a restriction is referred to as the _____.

4. Flow rate is proportional to the _____ of the differential pressure

5. The three types of orifice plates are _____, eccentric, and segmental.

6. Orifice plate _____ may be affected by factors such as the precision of the bore calculations, the installation quality, and flaws in the piping.

7. An orifice plate flow sensor usually consists of an orifice plate and two stainless steel _____.

Copyright © 2007 Amatrol, Inc.

SEGMENT 2

DIFFERENTIAL PRESSURE FLOW TRANSMITTERS

OBJECTIVE 5 DESCRIBE THE FUNCTION OF A DIFFERENTIAL PRESSURE FLOW TRANSMITTER

Read This

Differential pressure flow transmitters convert differential pressure signals to an analog (usually 4-20 mA) output signal that can indicate either the volumetric flow rate or the differential pressure. They are commonly used in applications that use differential pressure flow sensors (e.g. orifice plates, venturi tubes, etc.). However, they can also indicate the pressure difference between two locations in a process line. Figure 19 shows an example of a differential pressure transmitter.

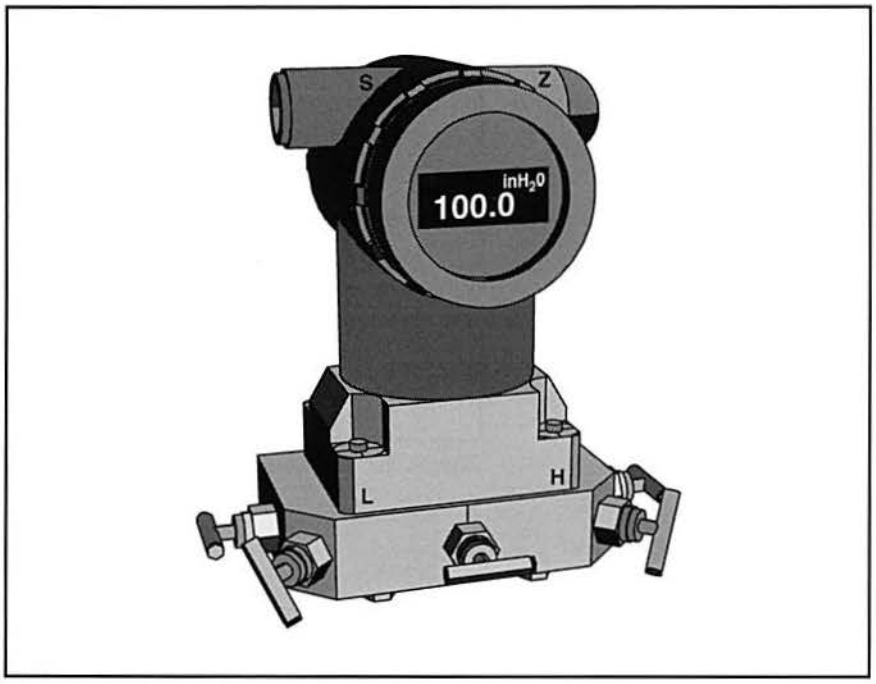

Figure 19. Differential Pressure Transmitter

Copyright © 2007 Amatrol, Inc.

OBJECTIVE 6 DESCRIBE THE OPERATION OF A DIFFERENTIAL PRESSURE FLOW TRANSMITTER

Most differential pressure flow transmitters have two main components: a smart (i.e. microprocessor based) flow transmitter and a differential pressure manifold, as shown in figure 20. The smart flow transmitter includes a sensor that senses the differential pressure, electronic components that convert the differential pressure signal to an electrical analog output signal, and a display that shows the current value of the process variable.

The differential pressure manifold receives the high and low pressure signals and guides them to the proper locations so that the pressure difference can be measured without damaging the transmitter.

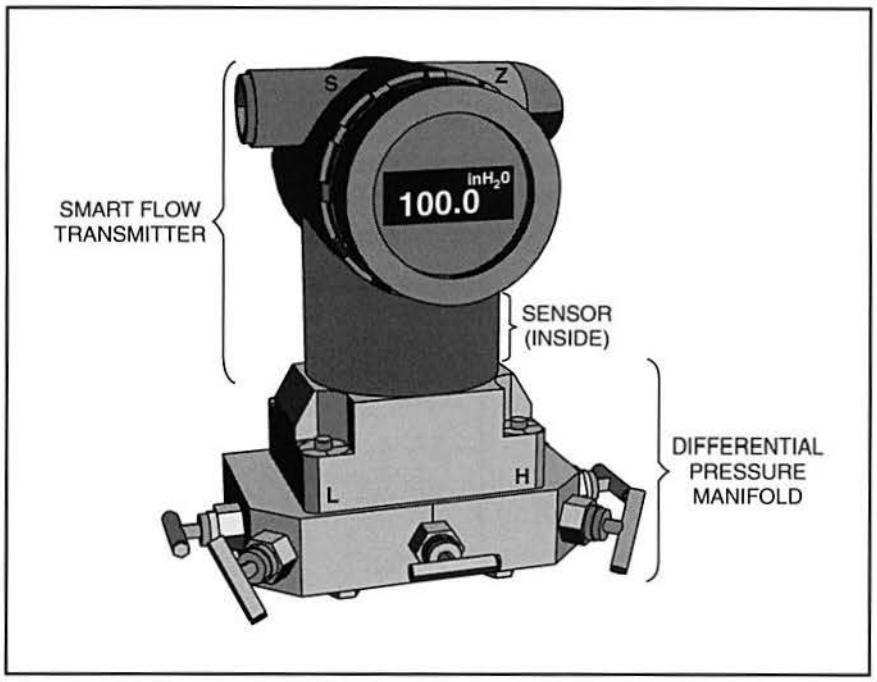

Figure 20. A Differential Pressure Flow Transmitter

Copyright © 2007 Amatrol, Inc.

Smart Flow Transmitter Construction

The smart flow transmitter consists of the following parts, as shown in figure 20:

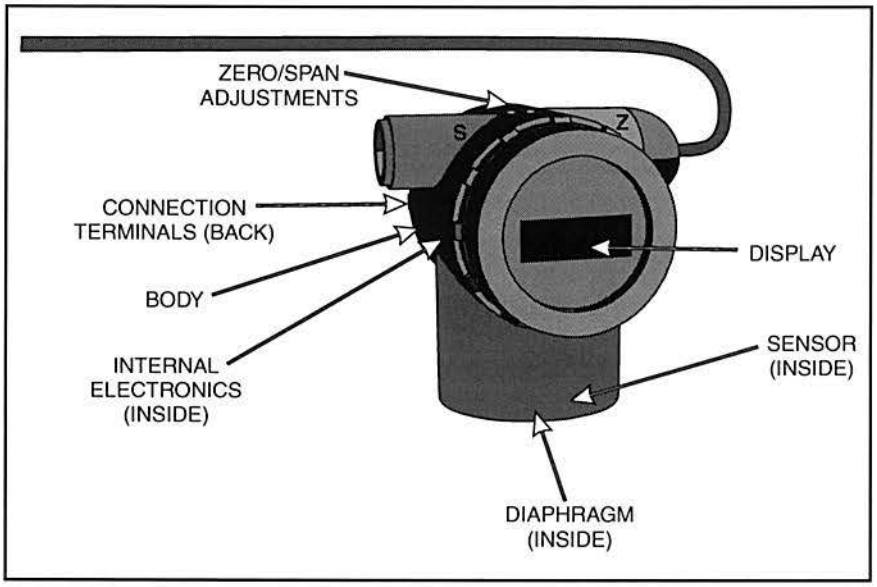

Figure 21. Parts of a Smart Flow Transmitter

- **Body** - The body encloses the transmitter's electronic components, sensor module, and diaphragm. It is usually made of steel and is very durable, which allows the transmitter to be used around hazardous materials.
- **Display** - The smart flow transmitter has a digital display that can be programmed to display the differential pressure or the volumetric flow rate. The display is sometimes protected behind shatterproof glass in hazardous measurement conditions.
- **Zero and Span Adjustments** - The zero and span adjustments are small pushbuttons located on the top of the transmitter. They set the minimum (zero adjust) and maximum (span adjust) differential pressure values.

Copyright © 2007 Amatrol, Inc.

- **Diaphragm -** The diaphragm is a flexible device that flexes by an amount that is proportional to the differential pressure. A small shaft is attached to the diaphragm so the movement of the diaphragm can be sensed by the sensor.
- **Sensor -** The sensor senses the movement of the diaphragm. One type of sensor used is a Linear Variable Differential Transformer (LVDT), as shown in figure 22. The movement of the core, which is attached to the diaphragm, causes the voltage induced in the secondary coils to vary. The differential voltage between the secondary coils indicates how much the core has moved and in which direction.
- **Internal Electronics -** The internal electronics include a microprocessor and other components that convert the differential pressure to an analog signal. The microprocessor often calculates the square root of the differential pressure, which allows the analog output signal to indicate the flow rate. If the transmitter does not perform this conversion, the controller must do it.

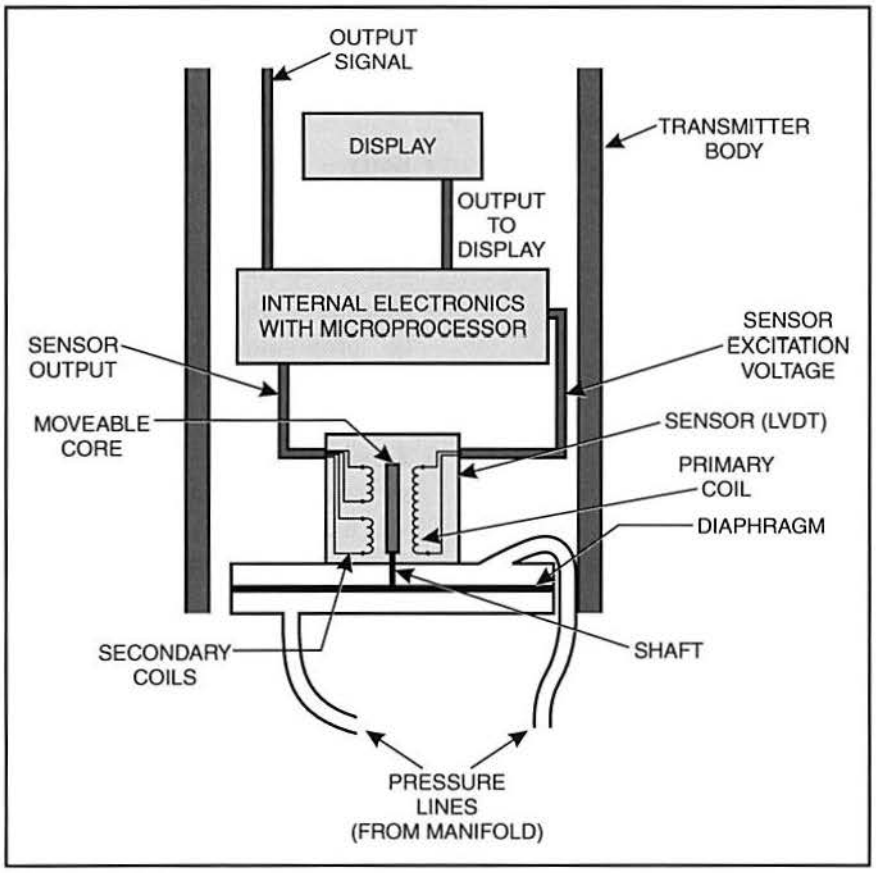

Figure 22. Internal Components of Smart Transmitter

Copyright © 2007 Amatrol, Inc.

- **Connection Terminals -** There are six connection terminals on the back of the smart flow transmitter, three in the top row and three in the bottom row, as shown in figure 23. The top row of connections is for the positive DC power supply connection, negative DC power supply connection, and ground. The bottom three connections are for separate communication devices like a Highway Addressable Remote Transducer (HART) communicator, which is used to program the smart transmitter.

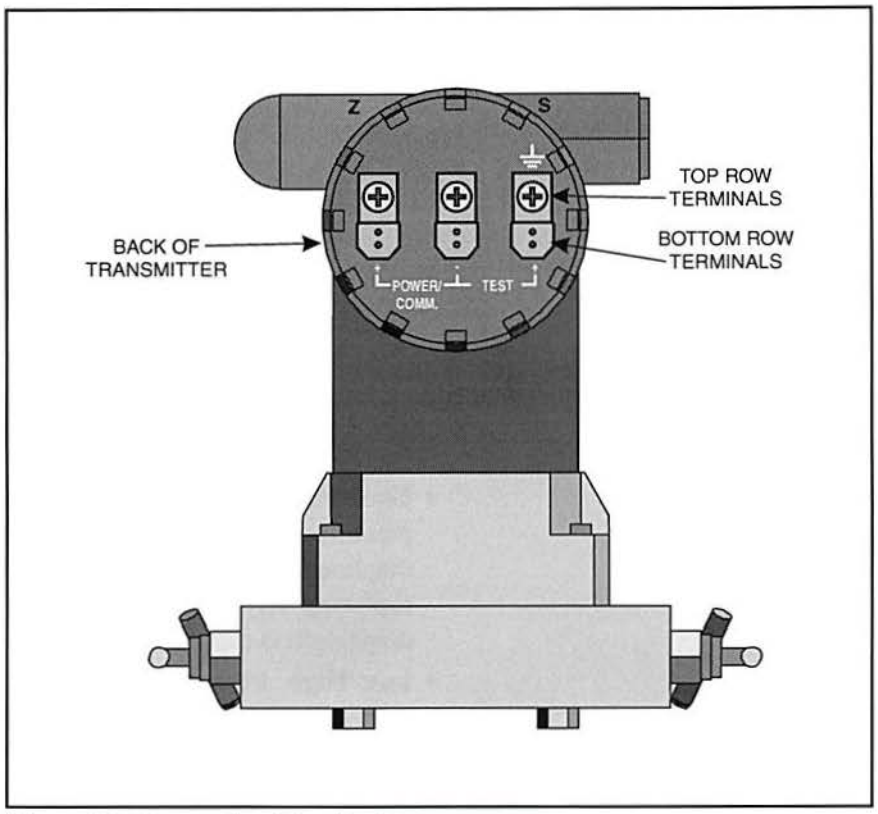

Figure 23. Connection Terminals

Copyright © 2007 Amatrol, Inc.

Manifold Construction

The manifold, as shown in figure 24, is made of stainless steel and includes the following externally visible components:

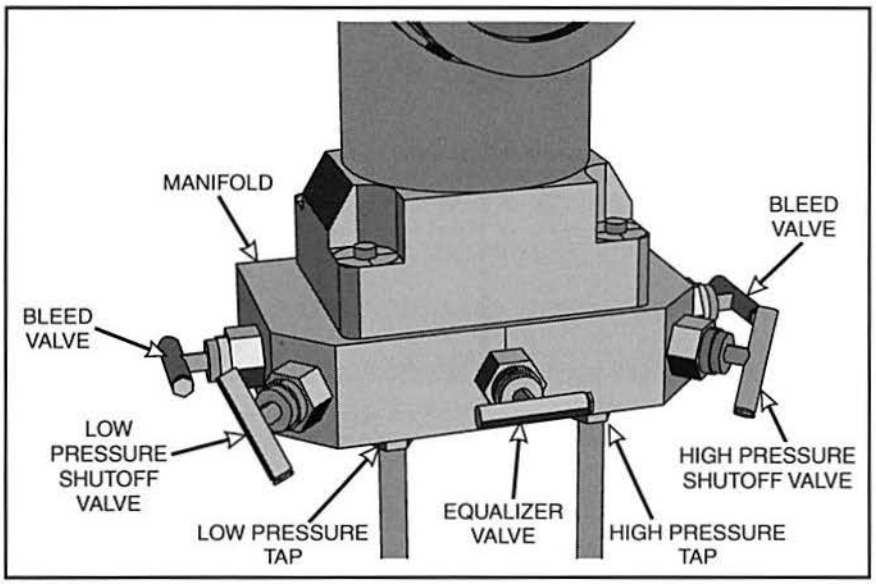

Figure 24. Differential Pressure Flow Transmitter Manifold

- **Equalizer Valve** - The equalizer valve prevents a differential pressure from being established across the transmitter's diaphragm. This protects the diaphragm by preventing it from rupturing any time air is released from the manifold. If the diaphragm is ruptured, the transmitter is useless.
- **Low/High Pressure Shut-off Valves** - The low-pressure and high-pressure shut-off valves prevent the pressure lines from putting pressure on the sensor module when the equalizer valve is not in the proper open or closed position. Doing so could damage the diaphragm.
- **Bleed Valves** - The bleed valves open to release (bleed) air from the low-pressure and high-pressure lines.
- **Pressure Taps** - The pressure taps are the connections for the low-pressure and high-pressure lines to the manifold.

Copyright © 2007 Amatrol, Inc.

The manifold provides an interface between the differential pressure sensor and the smart transmitter. Figure 25 shows the internal construction of the manifold.

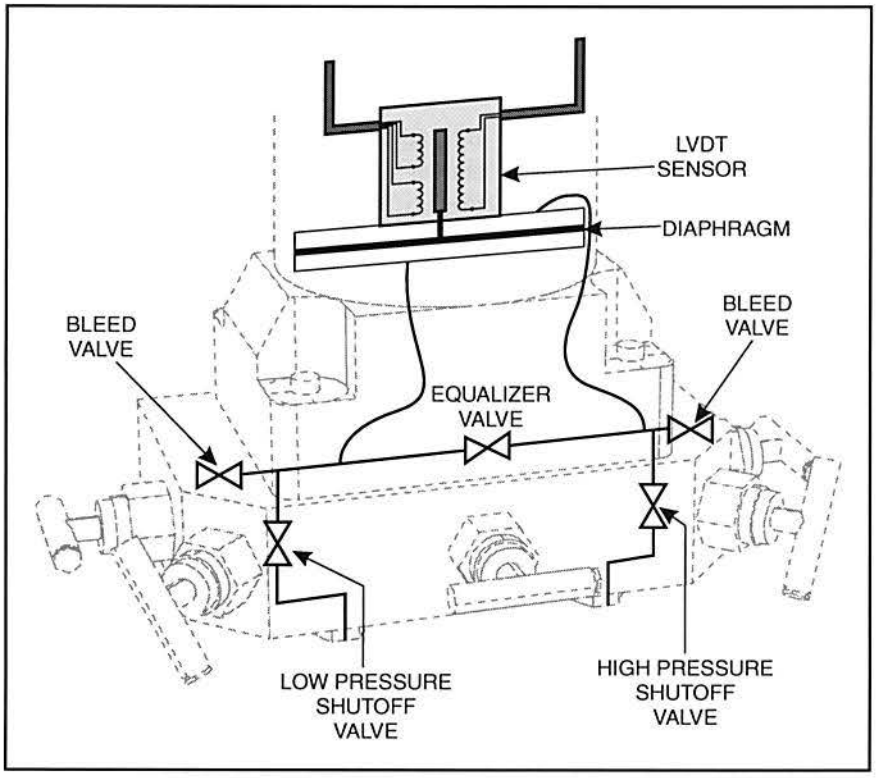

Figure 25. Internal Construction of Manifold

Copyright © 2007 Amatrol, Inc.

Transmitter Operation

Figure 26 shows the operation of a differential pressure flow transmitter. High and low pressure signals are transmitted from the pressure taps on the differential pressure sensor to the manifold attached to the transmitter. The differential pressure from these taps causes the diaphragm to flex. The amount of diaphragm movement is measured by the LVDT sensor and converted to a proportional electronic signal. The microprocessor-based internal electronics receive this signal from the sensor and generate an analog output (usually 4-20 mA) that indicates the differential pressure or the flow rate, depending on how the transmitter is programmed.

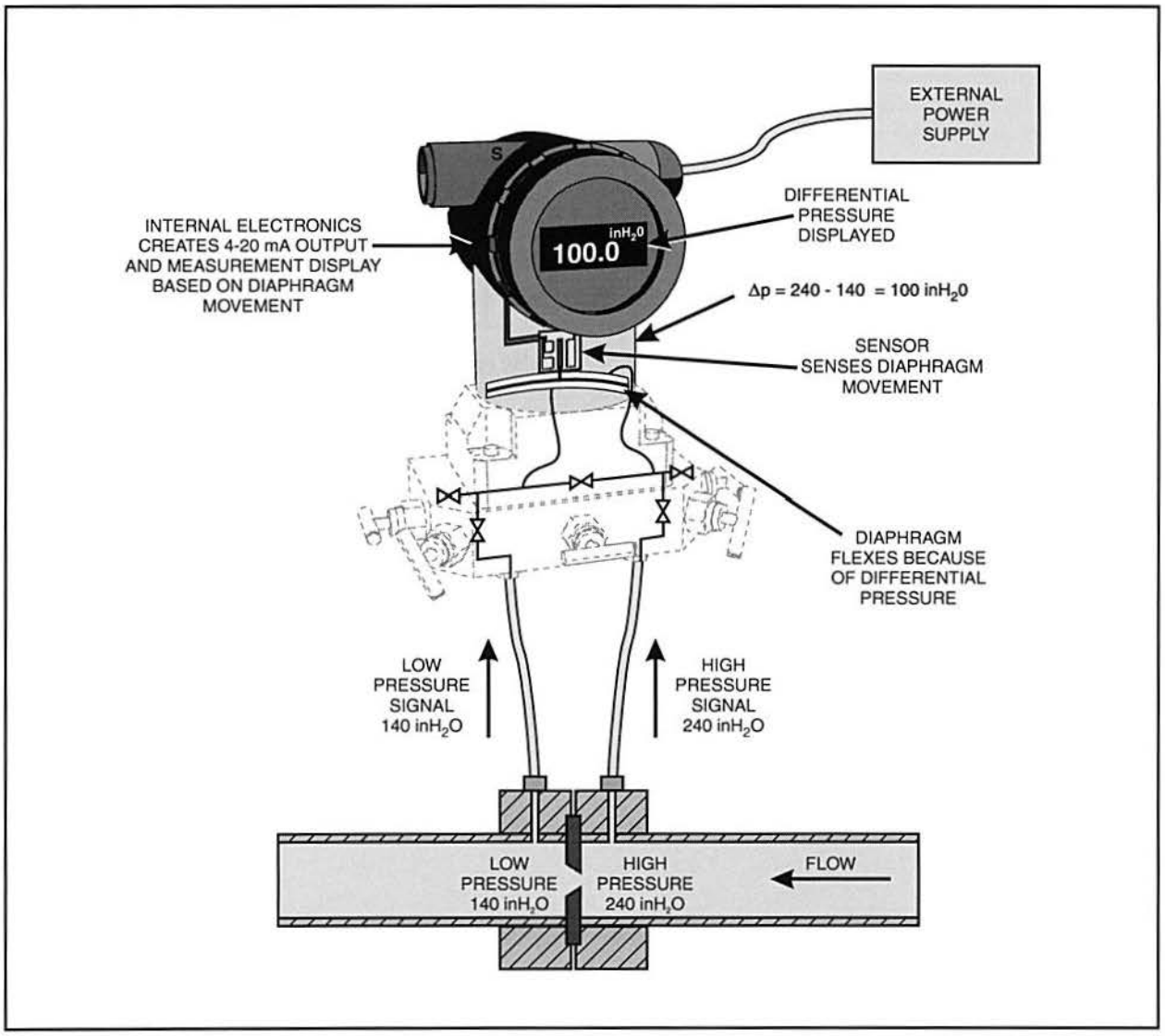

Figure 26. Operation of a Differential Pressure Flow Transmitter

Copyright © 2007 Amatrol, Inc.

Transmitter Wiring

Many differential pressure transmitters are constructed with a digital display to indicate the differential pressure or flow rate. However, if the transmitter does not have a digital display the transmitter can be wired to a process meter or controller to display flow rate.

Wiring a process meter or controller to a differential pressure transmitter involves connecting an external power supply, the differential pressure transmitter, and the process meter or controller input terminals in series, as shown in figure 27. The positive and negative power supply connections are located in the top row (recall that the bottom row is used to connect external communication devices) of the transmitter connection terminals. When the transmitter is wired in series with a controller or process meter, its 4-20 mA output is sent to the device, as the figure shows. The ground terminal (top row - far right) is wired when configuring low-power transmitter outputs. This output is usually 1-5 VDC or 0.8-3.2 VDC.

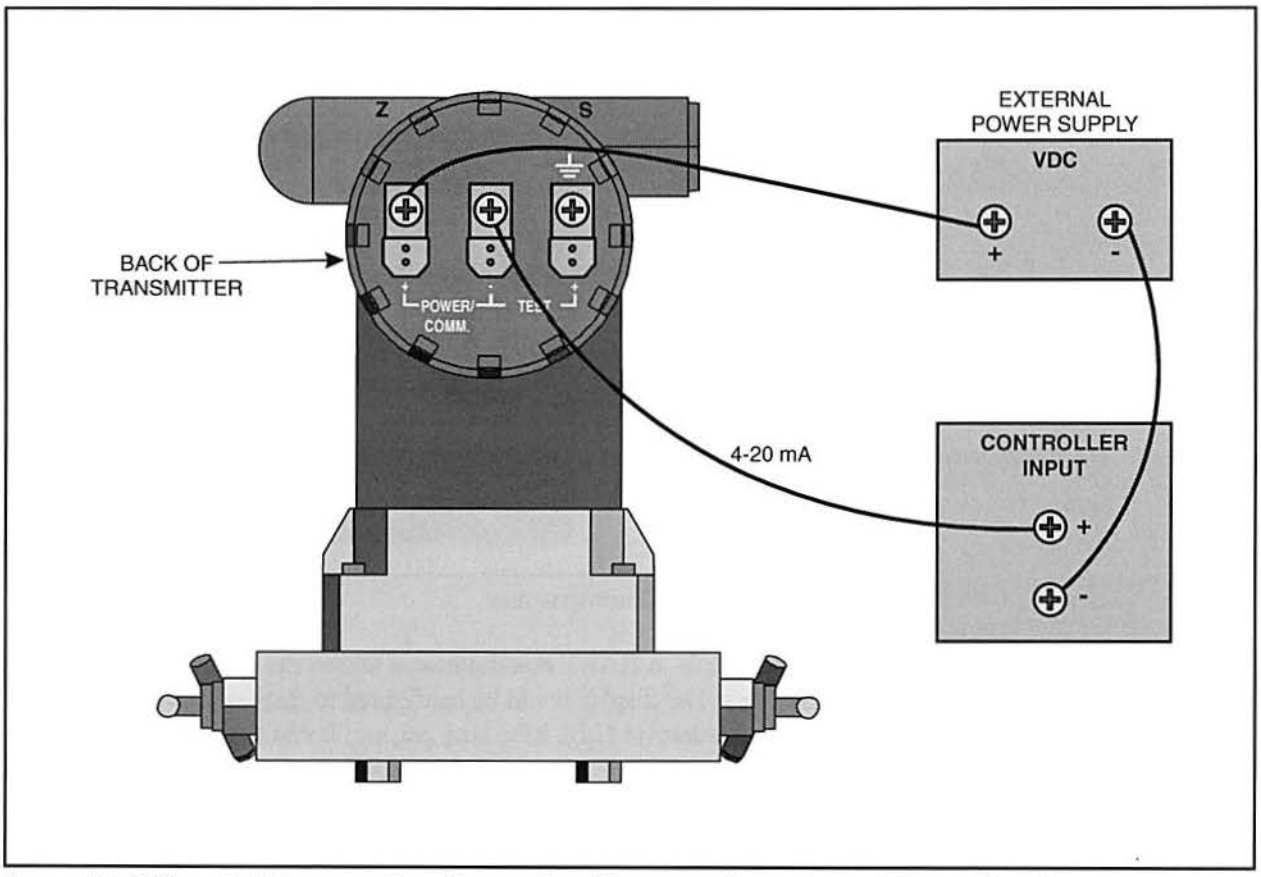

Figure 27. Differential Pressure Flow Transmitter Wired to a Controller and Power Supply

Copyright © 2007 Amatrol, Inc.

Transmitter Configuration

A Highway Addressable Remote Transducer (HART) communicator, shown in figure 28, can be connected to a smart (i.e. microprocessor based) differential pressure transmitter to configure it. A HART communicator or other HART communication device actually communicates over the same wiring that the 4-20 mA signal travels over. Configuration tasks include changing the engineering units, changing the transmitter range, adjusting the output according to a control loop or plant standard, and performing loop tests to ensure the transmitter is properly communicating with other devices.

Figure 28. HART Communicator

For example, a HART communicator allows the operator to change the display units. The display could be configured to display pressure units such as inches of water (in H_20), kPa, atm, psi, etc. It could also be configured to display the flow rate (e.g. gpm). The HART communicator also performs more complex functions like adjusting the transmitter output at a high and low point and linearizing the output between those points, a process called "trimming."

Differential pressure transmitters are normally sent from the manufacturer preprogrammed according to the buyer's specifications. Therefore, HART communicators are generally not an immediate necessity. However, they are useful for performing fast programming and performing loop diagnostics.

Copyright © 2007 Amatrol, Inc.

OBJECTIVE 7 DESCRIBE HOW TO BLEED THE MANIFOLD OF A DIFFERENTIAL PRESSURE TRANSMITTER

Bleeding the manifold refers to the act of releasing the air in the pressure lines through the release (bleed) valves. When a process is paused or stopped, to change a flow sensor for example, air often enters the pressure lines of the differential pressure manifold, as shown in figure 29. Air in the lines between the flow sensor and the transmitter causes errors, which can lead to false alarms and costly downtime. Therefore, it is important to release (bleed) any air in the lines.

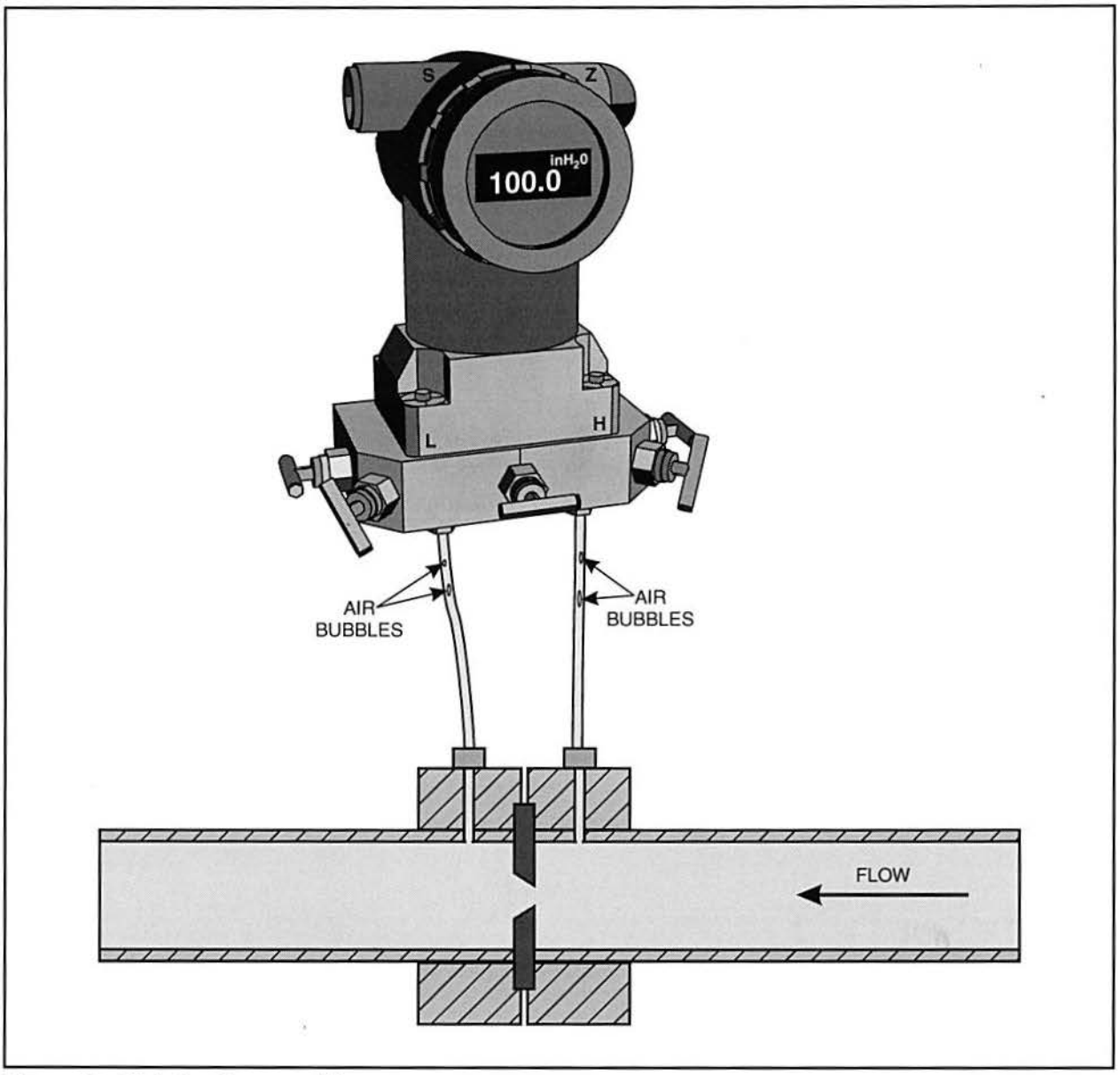

Figure 29. Air in the Pressure Lines

Copyright © 2007 Amatrol, Inc.

The following steps describe how to bleed the manifold of a differential pressure transmitter:

Step 1: Stop flow through the system

Stopping flow through a system can normally be accomplished by cutting the power to the system or closing valves leading to the section that contains the flow transmitter.

Step 2: Open the equalizer valve

The equalizer valve is the center valve on the manifold, as shown in figure 30. Rotating the valve handle counterclockwise opens the valve, while rotating it clockwise closes the valve.

The equalizer valve should be opened to prevent a large differential pressure from being established across the diaphragm while bleeding the manifold. If this is not done, the diaphragm could rupture.

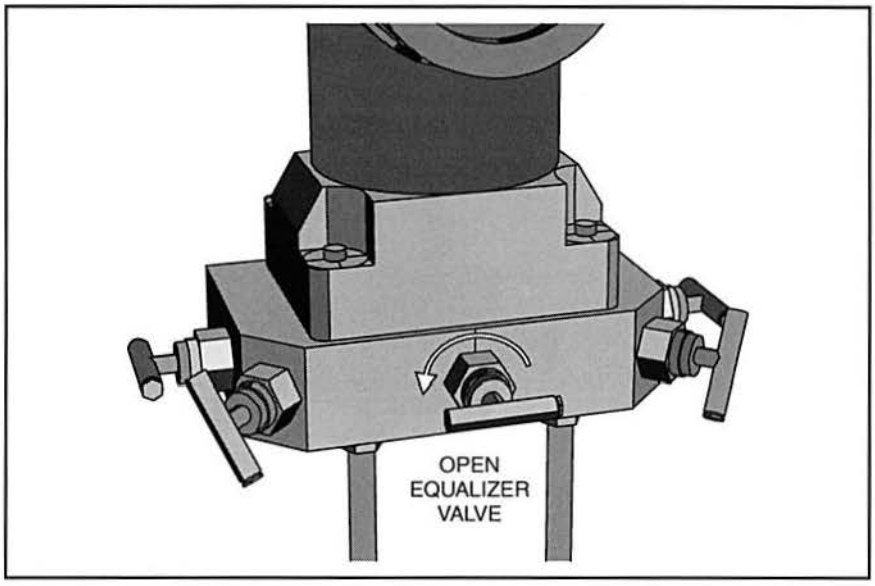

Figure 30. Open Equalizer Valve

Copyright © 2007 Amatrol, Inc.

Step 3: Close the high-pressure shut-off valve

The high-pressure shut-off valve may be located on either the left or the right side of the equalizer valve because the manifold is often constructed to match the direction of flow through the system (i.e. if flow is from right to left, the high-pressure side is on the right side of the restriction; if flow is from left to right, it is on the left). The high-pressure shut-off valve must connect to the high-pressure side of the differential pressure sensor to prevent damage to the transmitter. Rotating the valve handle in the clockwise direction closes this valve. Figure 31 shows a differential pressure transmitter manifold with the high-pressure shut-off valve on the right side of the equalizer valve.

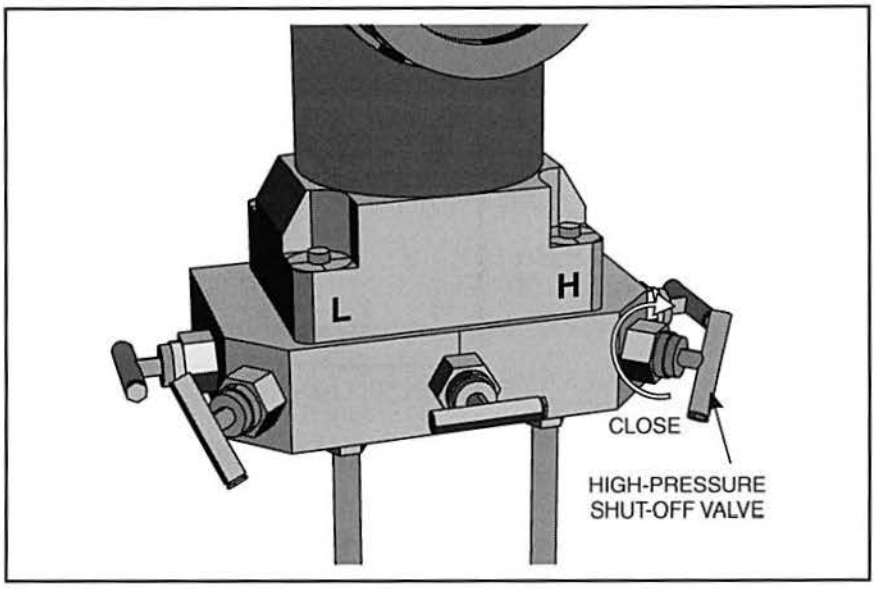

Figure 31. High-Pressure Shut-Off Valve

Copyright © 2007 Amatrol, Inc.

Step 4: Close the low-pressure shut-off valve

The low-pressure shut-off valve is located on the side opposite the high-pressure shut-off valve. Figure 32 shows a differential pressure transmitter manifold with the low-pressure shut-off valve on the left side of the equalizer valve.

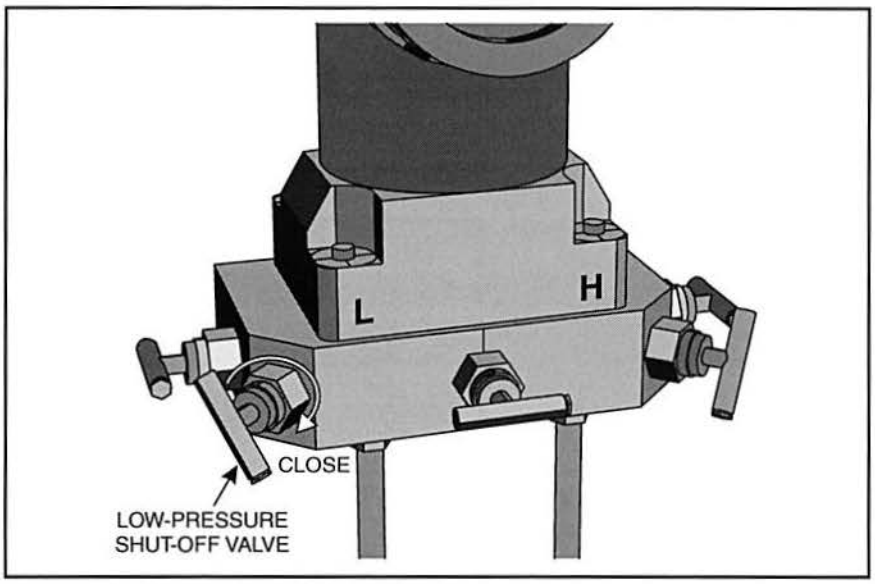

Figure 32. Low-Pressure Shut-Off Valve

Step 5: Start flow through the system

There must be flow through the system to bleed the manifold. This usually involves manually opening a valve leading to the transmitter.

Step 6: Open the shut-off valves

Fully open the high and low-pressure shut-off valves, one at a time. Either valve can be opened first because the equalizer valve is open to stabilize the pressure.

Copyright © 2007 Amatrol, Inc.

Step 7: Slightly open the bleed valves

The bleed valves are located behind each shut-off valve. Figure 33 shows one of the bleed valves. Rotating the valve handle in the counterclockwise direction opens the valve. Slightly open one of the bleed valves (either side can be opened first) to release air from the line and the manifold. After the air is released, the valve is closed. This procedure is then repeated for the other bleed valve.

Opening the bleed valve too far allows the liquid to leak from the system. The bleed valve should only be opened far enough to release the air.

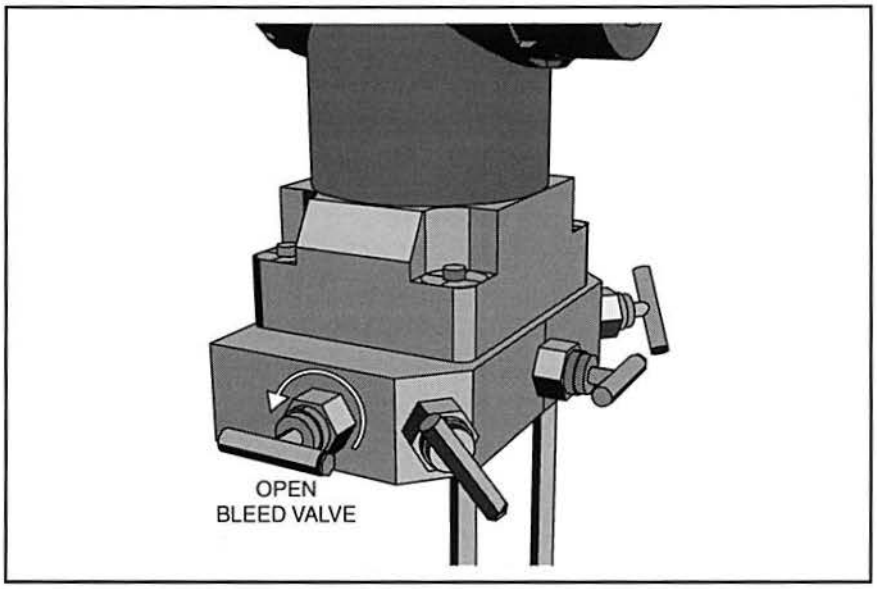

Figure 33. Bleed Valve

Step 8: Close the equalizer valve

After the air is bled from the pressure lines and manifold, the equalizer valve in the center of the manifold is closed.

Copyright © 2007 Amatrol, Inc.

OBJECTIVE 8 DESCRIBE HOW TO CALIBRATE A DIFFERENTIAL PRESSURE FLOW TRANSMITTER

Calibrating a differential pressure transmitter requires the following three steps:

Step 1: Set the Zero

The zero is set by applying the minimum input signal (e.g. pressure, flow, etc.) and pressing the zero button on the top of the transmitter for two seconds, as shown in figure 34. This setting determines the input value that results in the minimum output (usually 4 mA).

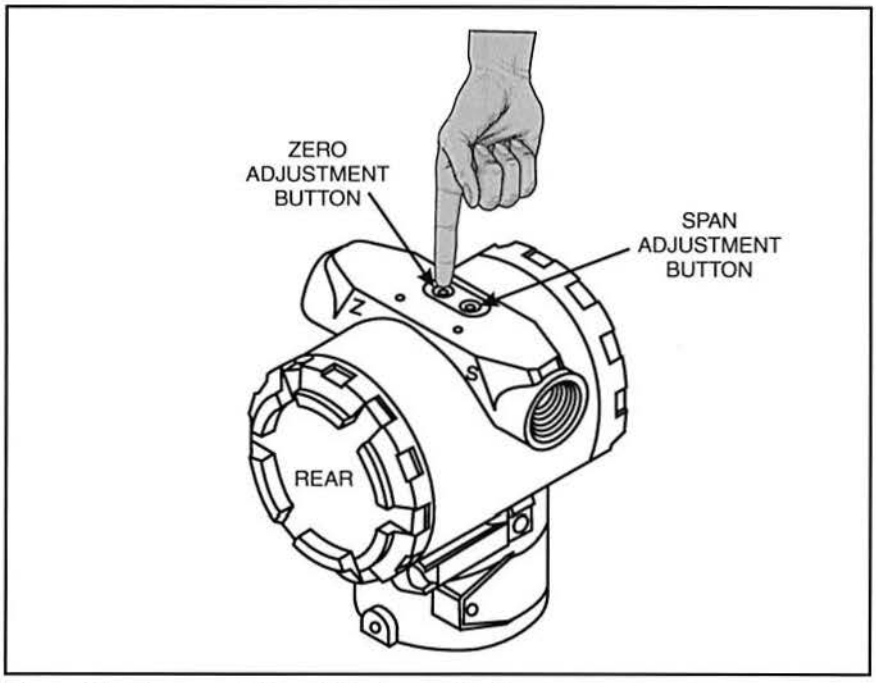

Figure 34. Span and Zero Adjustment Buttons

Copyright © 2007 Amatrol, Inc.

When the zero is set, the transmitter display indicates "PASS," as shown in figure 35.

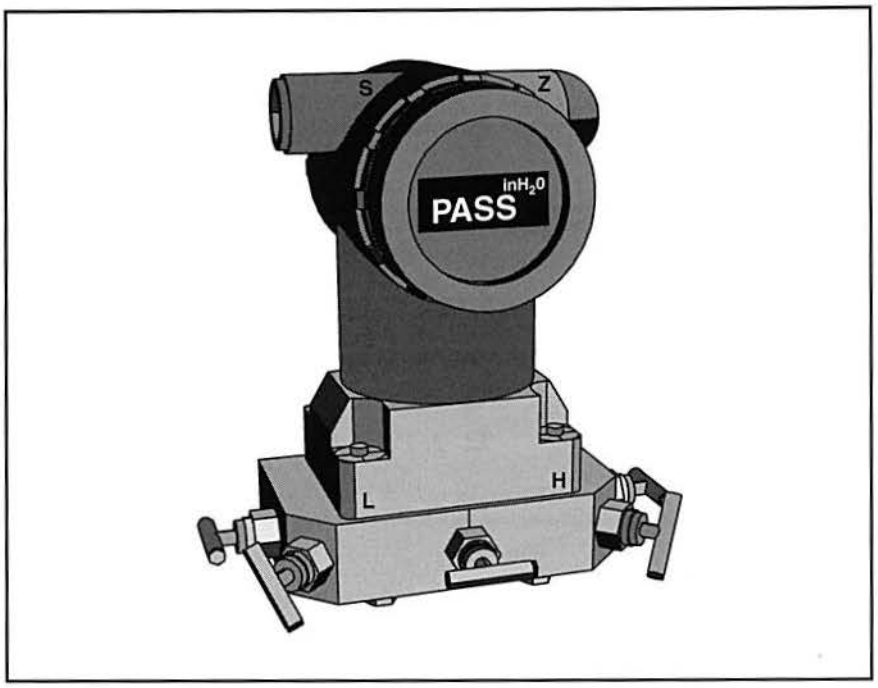

Figure 35. Zero Set in Differential Pressure Transmitter

Step 2: Set the Span

The span is set by applying the maximum input signal, then pressing and holding the span button on the top of the transmitter for two seconds. This setting determines the input value that results in the maximum output (usually 20 mA). When the span is set, the transmitter again displays "pass."

Step 3: Reset the Zero

It is a good practice to reset the zero after setting the span in case it has drifted.

The calibration of a differential pressure transmitter should be performed any time the differential pressure sensor is changed. It should also be checked periodically, even if nothing has changed.

Copyright © 2007 Amatrol, Inc.

SKILL 1 MEASURE FLOW USING AN ORIFICE PLATE FLOW SENSOR AND A DIFFERENTIAL PRESSURE FLOW TRANSMITTER

Procedure Overview

In this procedure, you will connect a circuit to measure flow using an orifice plate flow sensor and a differential pressure flow transmitter. To do this, you will have to calibrate the differential pressure flow transmitter using the rotameter reading. Before you calibrate, you must bleed the manifold.

❑ 1. Perform a lockout/tagout.

❑ 2. Perform the following substeps to set up the T5552, as shown in figure 36.

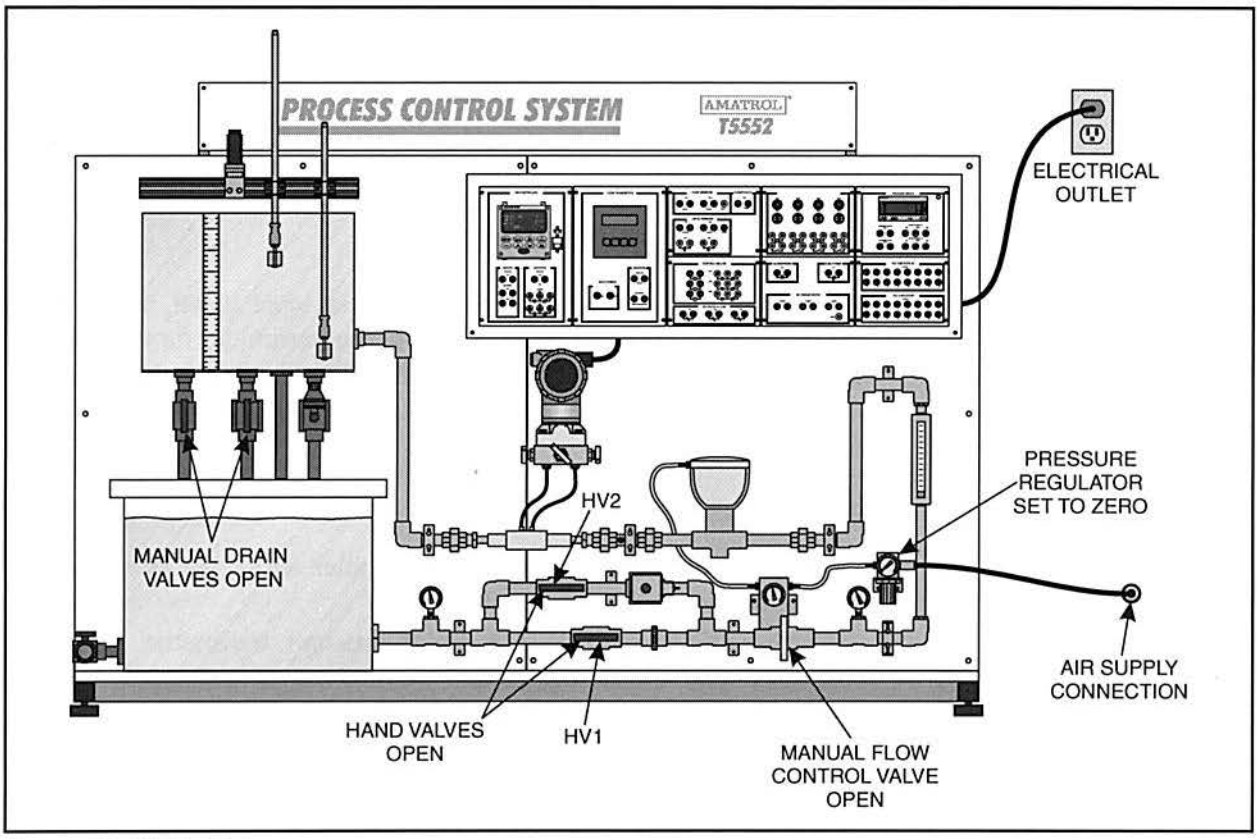

Figure 36. T5552 Setup

A. Connect the power cord to an electrical outlet.

B. Connect the T5552 to the air supply line.

C. Set the pressure regulator to 0 psi.

D. Fill the reservoir tank with water.

E. Open the process tank manual drain valves.

F. Open the manual flow control valve.

Copyright © 2007 Amatrol, Inc.

❑ 3. Connect the circuit shown in figure 37.

This circuit allows you to measure flow using an orifice plate flow sensor. It consists of wiring that supplies power and connects an indicator lamp to the pump, wiring that connects the differential pressure transmitter output (FT2 connections) to the process meter, and wiring that connects indicator lamps to the process meter alarm relays. The same circuit is used to measure flow through each differential pressure flow sensor.

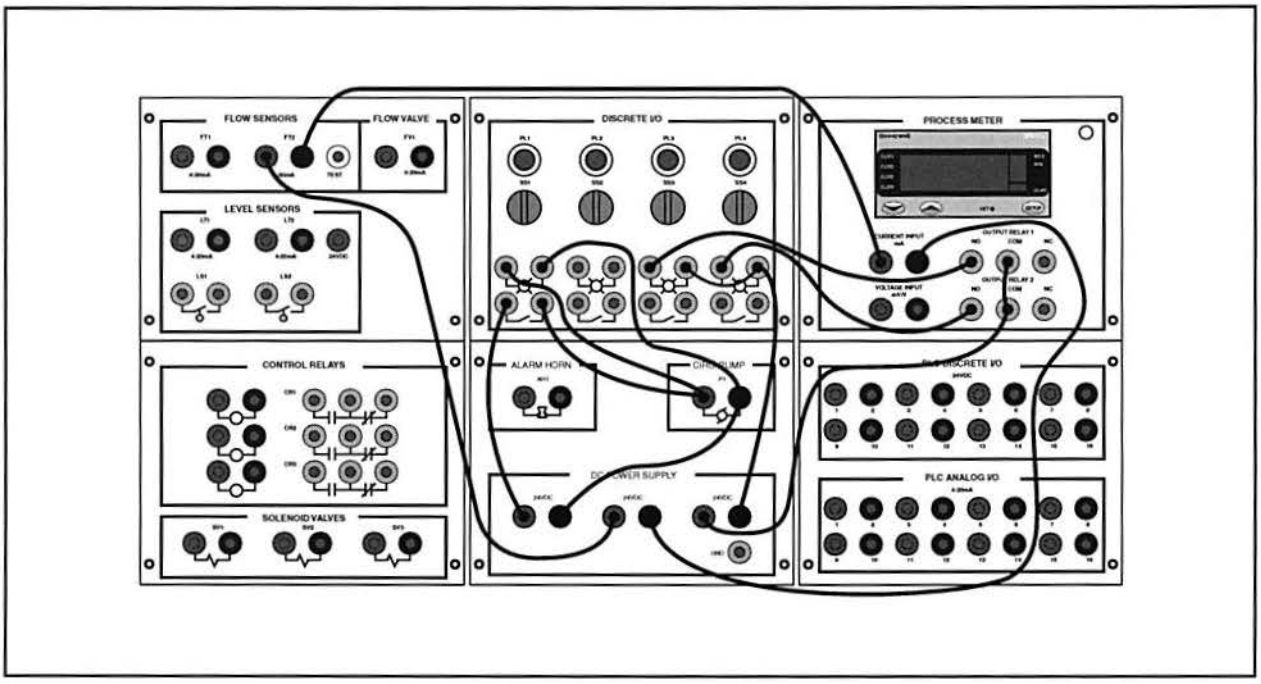

Figure 37. Orifice Plate Flow Sensor and Differential Pressure Transmitter Flow Circuit

Copyright © 2007 Amatrol, Inc.

Figure 38 shows the P&ID for the T5552. The active components and wiring are highlighted.

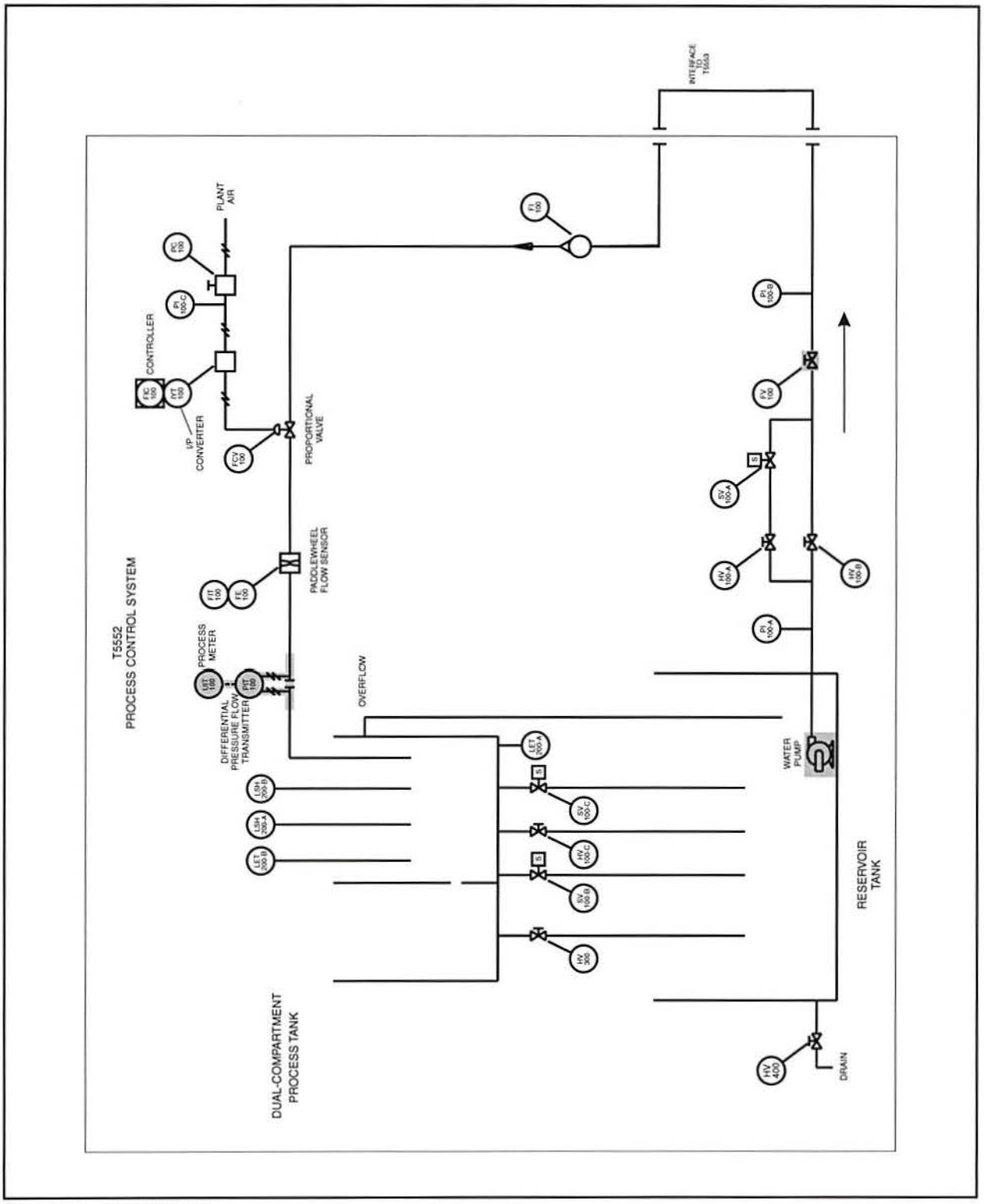

Figure 38. T5552 P&ID

Copyright © 2007 Amatrol, Inc.

Figure 39 shows the wiring diagram for the circuit.

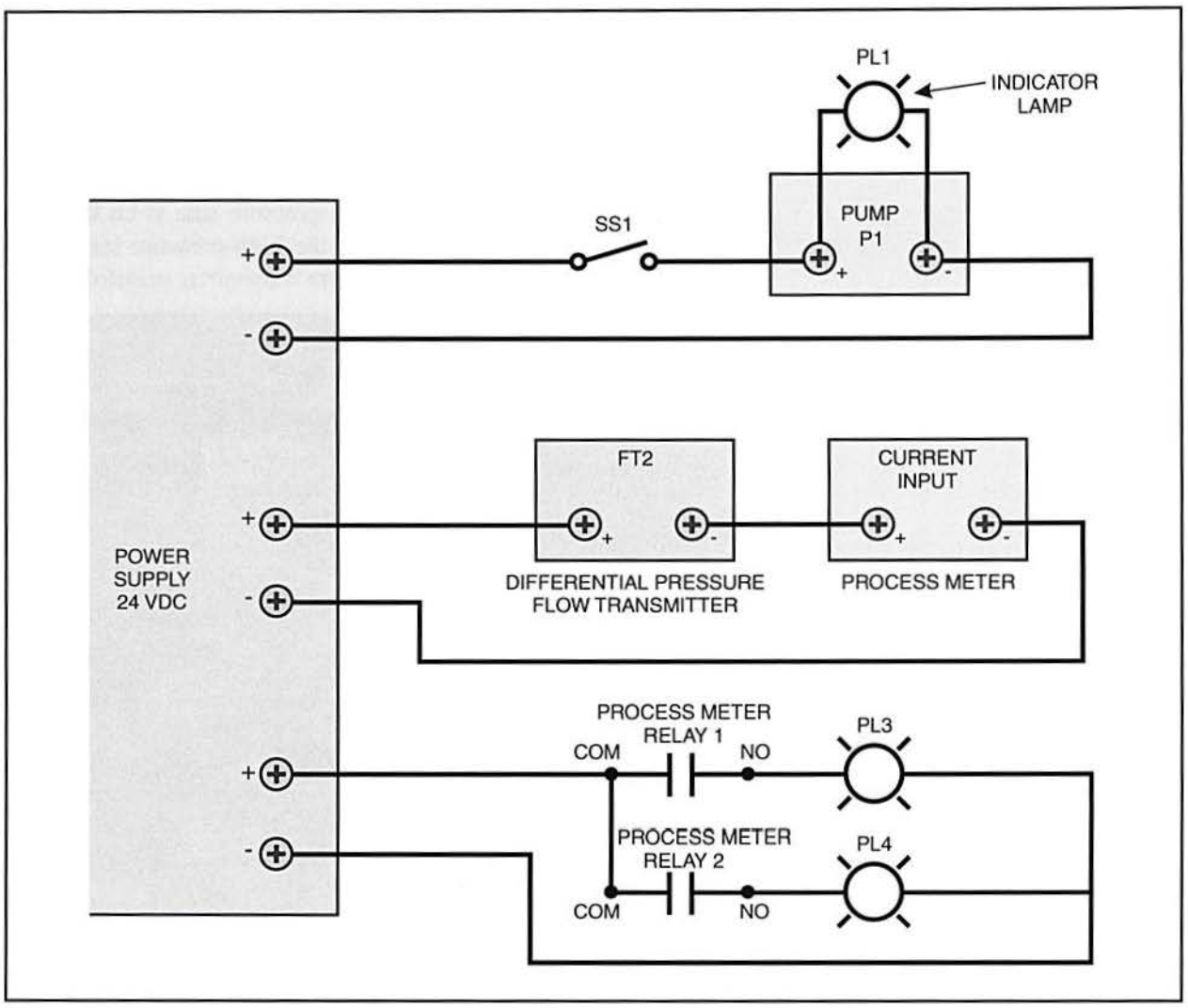

Figure 39. Wiring Diagram for Flow Circuit

Copyright © 2007 Amatrol, Inc.

❑ 4. Connect the tube on the high side (H) of the differential pressure transmitter to the quick connector on the upstream side of the orifice plate, as shown in figure 40.

❑ 5. Connect the tube on the low side (L) of the transmitter to the quick connector on the downstream side of the orifice plate, as also shown in figure 40.

On the T5552, the flow through the differential pressure sensor is from right to left. Therefore the high pressure side is on the right side of the restriction. Accordingly, the high-pressure tube is on the right side of the differential pressure transmitter manifold.

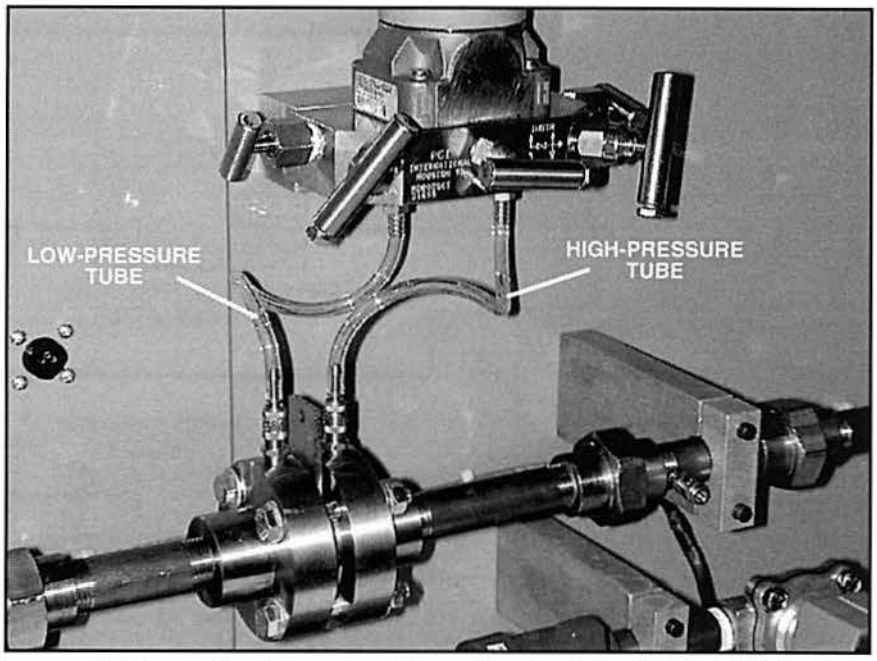

Figure 40. Manifold Pressure Tubes Attached to Orifice Plate Flow Sensor Quick Connects

Copyright © 2007 Amatrol, Inc.

❑ 6. Program the Honeywell UDI 1700 process meter according to the values listed in the table in figure 41. These settings allow the process meter to display the flow rate, which the differential pressure flow sensor measures. They also indicate low and high-flow rate condition to the process meter.

MENU	PARAMETER	VALUE
ConF	inPt	4_20
	ruL	0.9
	rLL	0.0
	ALA 1	P_Lo
	PLA 1	0.3
	AHY 1	0.1
	ALA 2	P_Hi
	PhA 2	0.8
	AHY 2	0.1
	USE 1	A1nd
	USE 2	A2nd

Figure 41. Honeywell UDI 1700 Process Meter Settings

The PLA 1 setting of 0.3 represents the low flow rate. If the flow rate falls below 0.3 gpm, the process meter produces a low flow rate alarm. The PhA 2 setting of 0.8 represents the high flow rate. If the flow rate exceeds 0.8 gpm, the process meter produces a high flow rate alarm.

Copyright © 2007 Amatrol, Inc.

❑ 7. Perform the following substeps to bleed the differential pressure transmitter manifold.

A. Fully open (counterclockwise) the equalizer valve (center) on the differential pressure transmitter manifold, shown in figure 42.

B. Fully close (clockwise) the high and low-pressure shut-off valves on each side of the equalizer valve, also shown in figure 42.

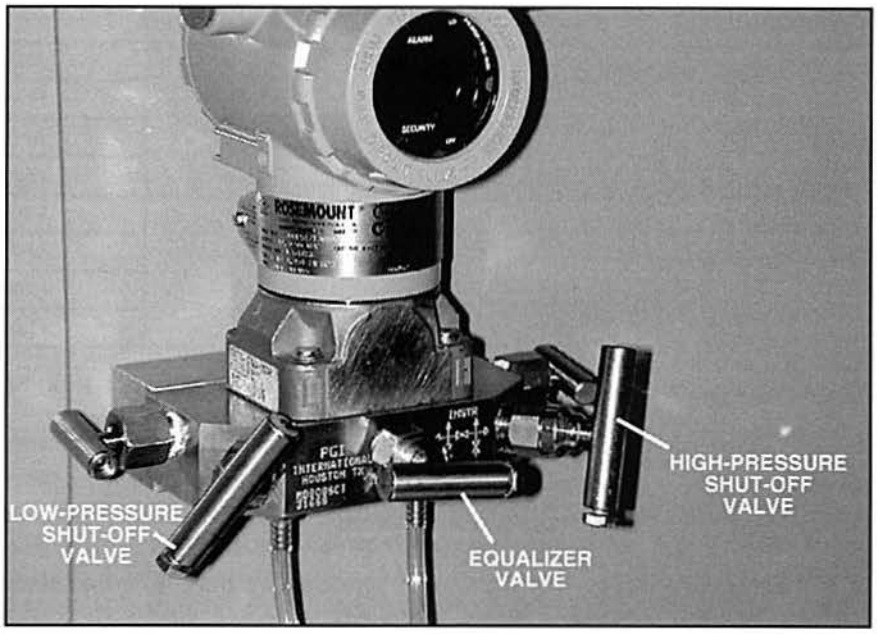

Figure 42. Equalizer Valve and High and Low-Pressure Shut-Off Valves

Copyright © 2007 Amatrol, Inc.

C. Make sure the bleed valves on both sides of the manifold are fully closed (clockwise), as shown in figure 43.

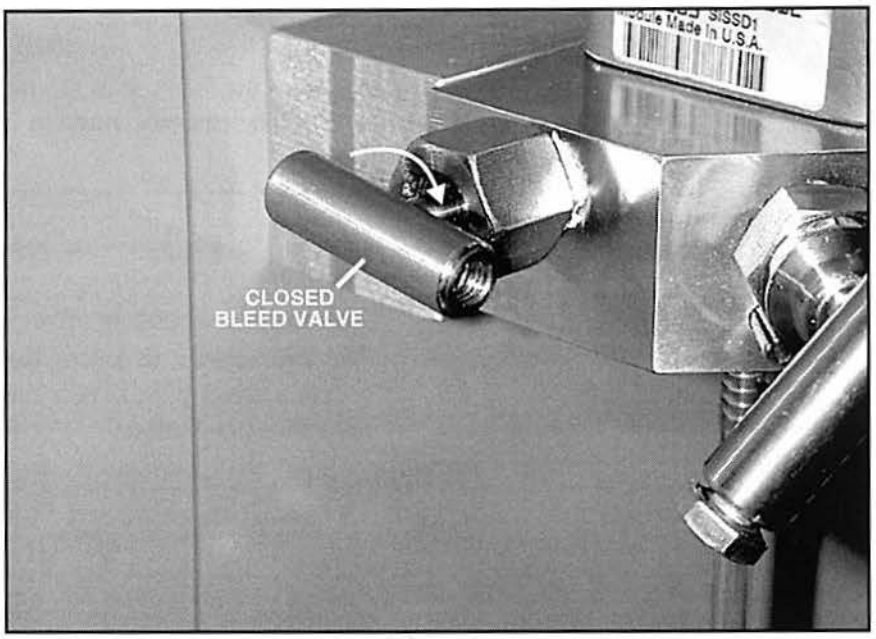

Figure 43. Closed Bleed Valve

D. Turn on selector switch **SS1** to start the pump.

E. One at a time, fully open (rotate counterclockwise) the high and low-pressure shut-off valves on each side of the equalizer valve.

F. Slightly open (counterclockwise) the right bleed valve to bleed off air in the tubing and manifold.

G. Close the right bleed valve when all the air has bled out, as indicated by the removal of air bubbles from the tubes connecting the transmitter to the sensor.

   Some water may bleed out of the valve as well. This is normal.

H. Slightly open (counterclockwise) the left bleed valve to bleed off air in the tubing and manifold.

I. Close the left bleed valve when all the air has bled out.

J. Re-check the tubing to be sure all of the air is out.

   If there is still air in the tubing, repeat steps F – I.

NOTE

You should always bleed the manifold before calibrating the differential pressure flow transmitter.

K. Close (clockwise) the equalizer valve.

Copyright © 2007 Amatrol, Inc.

❑ 8. Perform the following substeps to calibrate the differential pressure transmitter.

> **NOTE**
>
> Because of the location of the differential pressure transmitter on the T5552, you will need a right-angle Allen wrench to calibrate it.

A. Loosen the left screw on top of the transmitter, as shown in figure 44.

This requires a short or offset screwdriver.

The two screws on top of the differential pressure transmitter secure a cover plate. The cover plate conceals and protects the zero and span buttons.

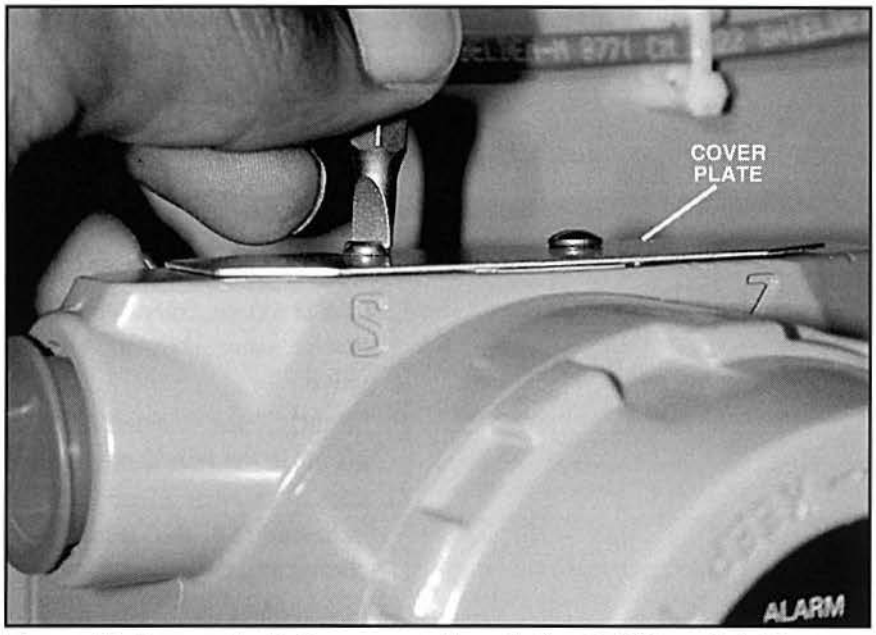

Figure 44. Removal of Screw on Top Left of Differential Pressure Transmitter

Copyright © 2007 Amatrol, Inc.

B. Rotate the cover plate counterclockwise as shown in figure 45.

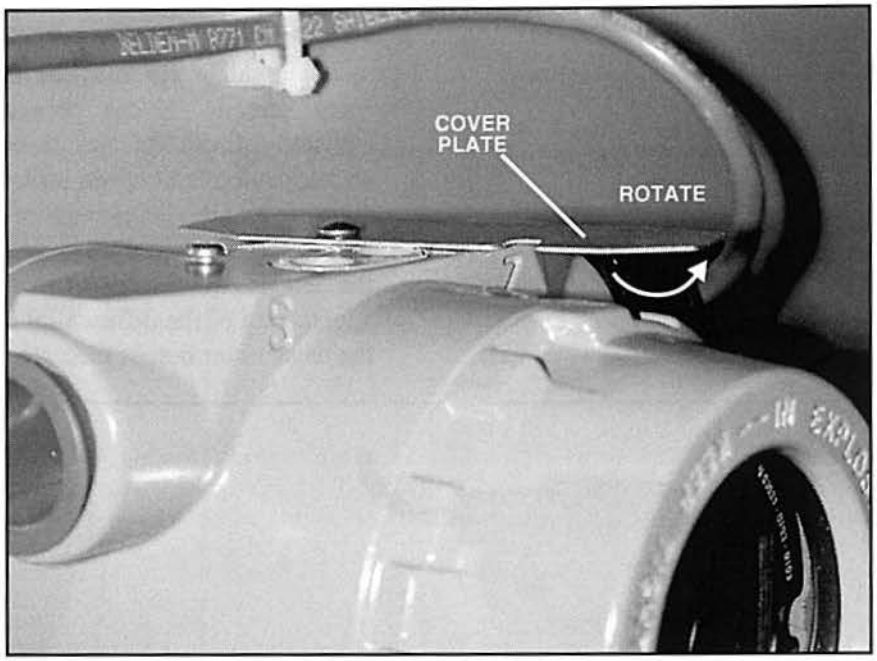

Figure 45. Rotated Cover Plate

Rotating the cover plate exposes the zero (Z) and span (S) buttons, as shown in figure 46.

The buttons may not be visible, but you can feel for their location.

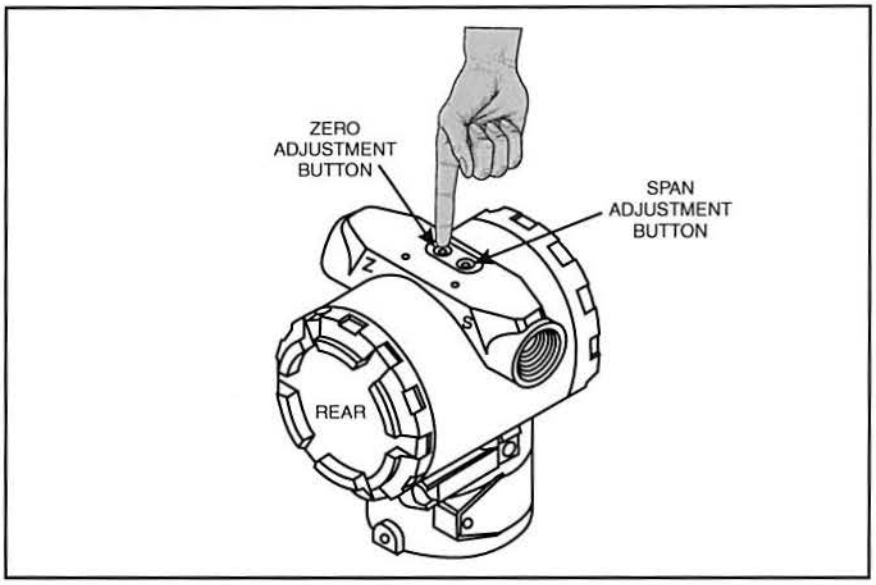

Figure 46. Span and Zero Adjustment Buttons

C. Turn off selector switch **SS1** to stop the water flow into the tank.

Copyright © 2007 Amatrol, Inc.

D. Observe that the flow reading on the rotameter indicates 0 gpm because there is no flow in the system.

E. Observe the differential pressure transmitter display.

You should notice that the display changes between two or more screens. If the pressure and output are within the operating limits of the transmitter, the transmitter display should alternate between indicating the value of the differential pressure and the percentage of the entire range that the pressure represents, as shown in figure 47. The square root symbol to the left of the percentage of range value indicates that the square root of the differential pressure is being extracted so that the transmitter output indicates the flow rate.

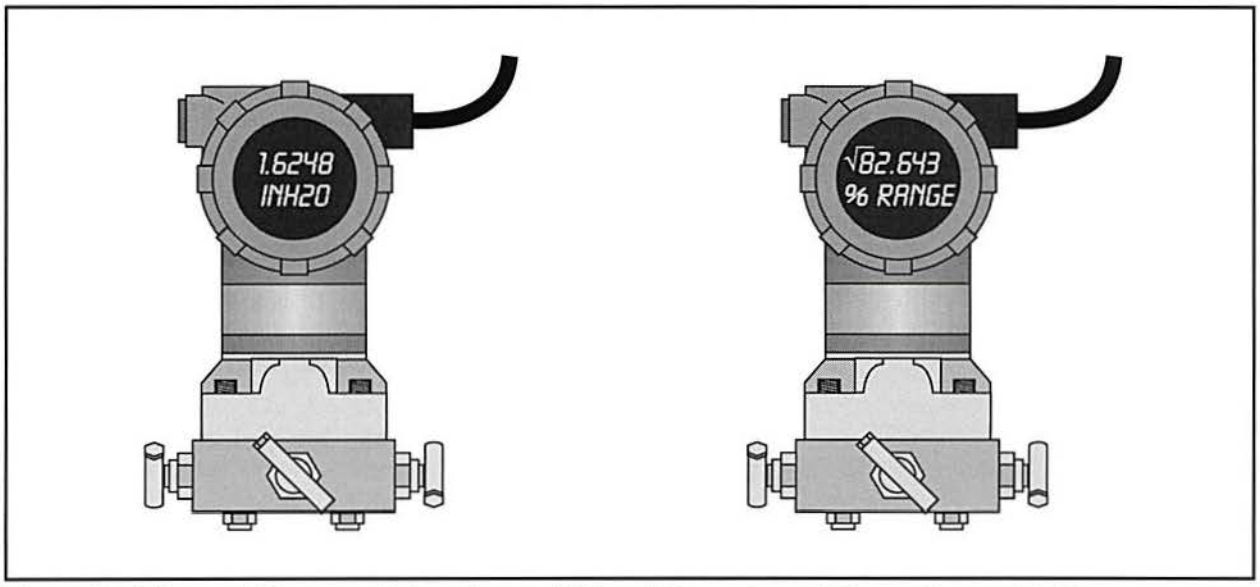

Figure 47. Differential Pressure Value Screen (left) and Percentage of Range Screen (right)

Copyright © 2007 Amatrol, Inc.

If the transmitter output is outside the normal operating limits (i.e. less than 4 mA or greater than 20 mA), the transmitter may cycle through a third screen that indicates that the current output is saturated, as shown in figure 48.

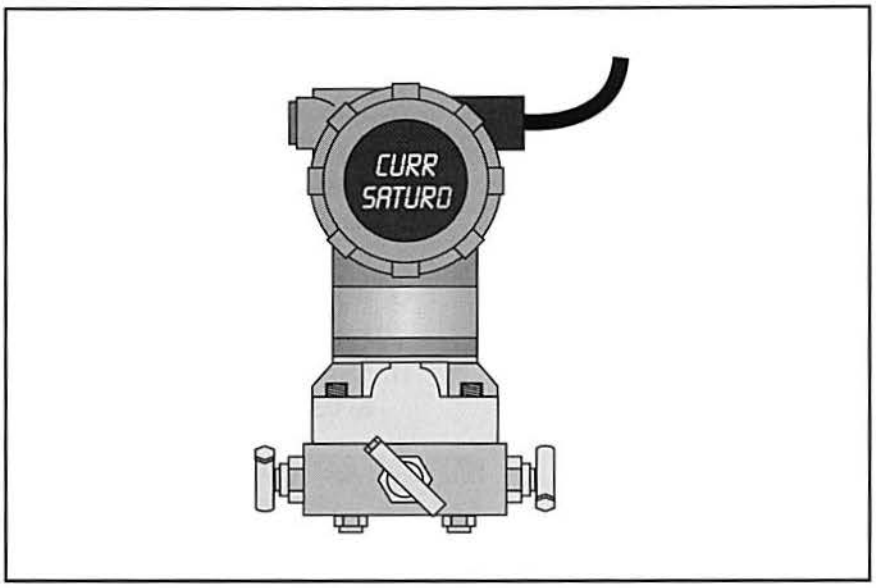

Figure 48. Current Saturated Display Screen

The differential pressure transmitter on the T5552 is designed to measure up to 25.00 inches of water pressure. If the differential pressure is above approximately 25.80 inches H_2O, the transmitter display cycles through a fourth screen that indicates the measured pressure is above the pressure limit, as shown in figure 49.

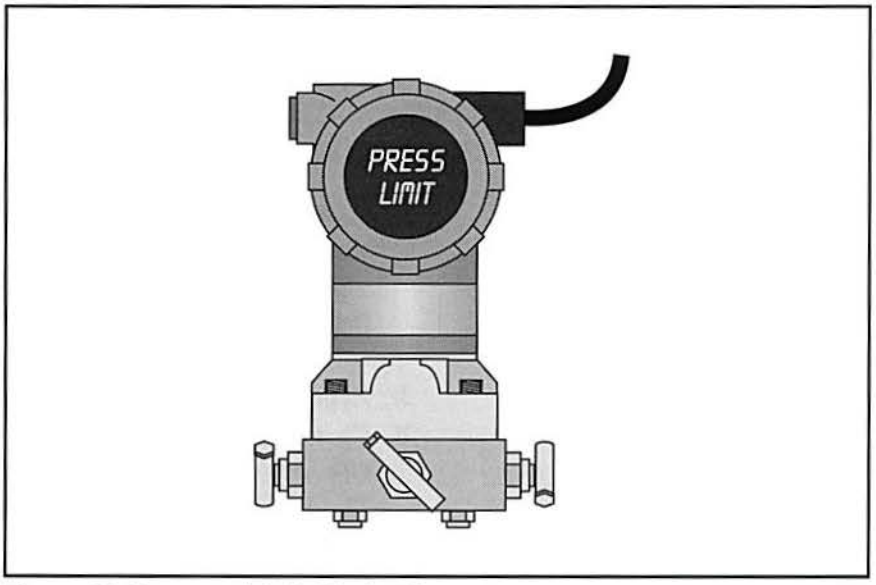

Figure 49. Pressure Limit Display Screen

Copyright © 2007 Amatrol, Inc.

NOTE

When the transmitter is properly calibrated, the display screens for current saturated (CURR SATURD) and pressure limit (PRESS LIMIT) do not appear.

F. Using the right-angle Allen wrench, press and hold down the **zero** (**Z**) button on the top right of the transmitter for 2 seconds.

   The LCD display on the differential pressure transmitter should flash "PASS," indicating that the zero value for a flow of 0 gpm has been accepted and set.

G. Now, turn on selector switch **SS1** to start the pump and allow water to flow into the tank.

H. Using the manual flow control valve, adjust the maximum flow to **0.9 gpm** on the rotameter, as shown in figure 50.

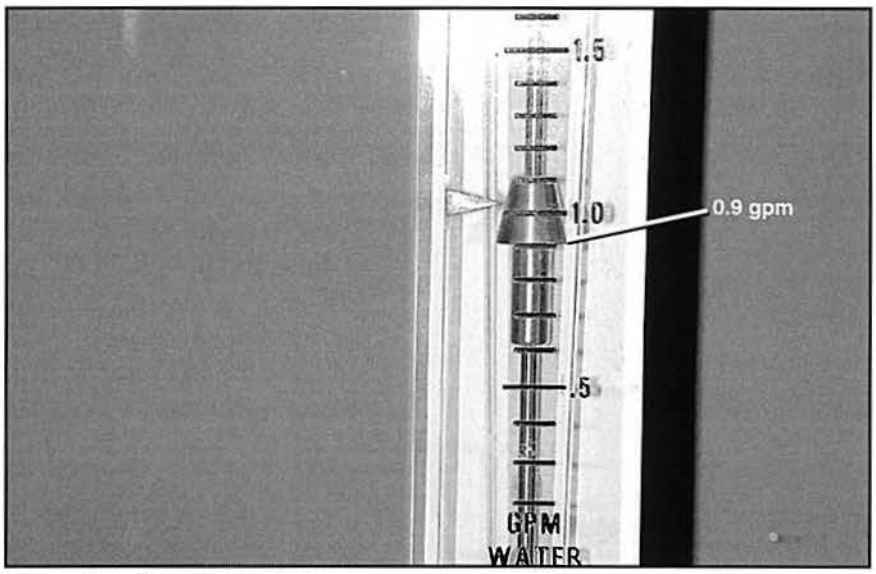

Figure 50. Flow Rate of 0.9 gpm

I. Using the right-angle Allen wrench, press and hold down the **span** (**S**) button on the top left of the transmitter for 2 seconds.

   The LCD display on the differential pressure transmitter should flash "PASS," indicating that the span value has been accepted and set.

J. Repeat substeps C-F to reset the zero in case it has drifted.

K. Close the cover plate on top of the transmitter and retighten the retaining screw.

   The transmitter is now calibrated to give an analog output of 4–20 mA that corresponds to a flow rate of 0–0.9 gpm respectively. The system is now set up so that the process meter indicates the flow rate based on the output of the differential pressure transmitter.

Copyright © 2007 Amatrol, Inc.

❑ 9. Perform the following substeps to change the flow rate and test the calibration of the differential pressure flow transmitter and circuit alarms.

A. Fully close (clockwise) the manual flow control valve.

The process meter should display 0, indicating that there is no flow in the system. Indicator light PL3 should also be lit, indicating a low flow rate alarm.

B. Open the manual flow control valve until the rotameter indicates that the flow rate is 0.4 gpm.

The process meter display should agree very closely with the rotameter reading. Indicator light PL3 should be off, indicating sufficient water flow through the system.

C. Increase the flow rate in increments of 0.1 gpm using the manual flow control valve.

D. Record the process meter readings in the following table when the flow rate, according to the rotameter, reaches the values listed in the table.

MEASURED FLOW RATES	
ROTAMETER READING (gpm)	PROCESS METER READING (gpm)
0.4	
0.5	
0.6	
0.7	
0.8	
0.9	

E. Determine if the readings are within 0.1 gpm of each other?

_____(Yes\No)

You should find that the readings are very close. If they are not, recalibrate the differential pressure flow transmitter and the process meter.

When you reach 0.9 gpm (the process meter reading should closely match the rotameter reading), you should notice that indicator light PL4 has turned on, signifying a high flow rate alarm. The indicator light turns on because the flow rate has increased beyond the set point value of 0.8 gpm.

F. Close the manual flow control valve enough to drop the flow rate below 0.8 gpm.

You should notice that indicator light PL4 turns off.

G. Turn off selector switch **SS1** to stop the pump.

Copyright © 2007 Amatrol, Inc.

❑ 10. Perform the following substeps to shut down the T5552.

A. Close the process tank hand drain valves.

B. Turn off the main circuit breaker.

C. Disconnect the circuit.

NOTE

You calibrated the differential pressure transmitter using the rotameter as a reference instrument. However, a rotameter is normally used to obtain a quick approximation of the flow rate and not for calibration purposes because it is not as precise as other devices.

Copyright © 2007 Amatrol, Inc.

SEGMENT 2

SELF REVIEW

1. The two main components of a differential pressure transmitter are the flow transmitter and the _____.

2. The _____ inside the smart flow transmitter electronically calculates the square root of the differential pressure.

3. To release the air in the pressure lines between the differential pressure sensor and the transmitter, you have to _____ the manifold.

4. The zero and _____ adjustments are small pushbuttons located on the top of the transmitter.

5. The _____ valve on a manifold prevents a differential pressure from being established across the diaphragm.

6. The pressure _____ are the connections for the low and high-pressure lines to the manifold.

7. Differential pressure flow transmitters convert differential pressure to an analog output signal that indicates either the _____ or the differential pressure.

8. The first step to calibrate a differential pressure transmitter is to set the _____.

Copyright © 2007 Amatrol, Inc.

SEGMENT 3

COMMON DIFFERENTIAL PRESSURE FLOW SENSORS

OBJECTIVE 9 DESCRIBE THE OPERATION OF A FLOW NOZZLE

A flow nozzle is a differential pressure flow sensor that constricts the flow through a contoured plate, which is usually made of stainless steel or another corrosion resistant material. Like an orifice plate, the flow nozzle also has high and low-pressure taps. However, unlike an orifice plate, a flow nozzle provides a smooth transition from the pipe to the restriction.

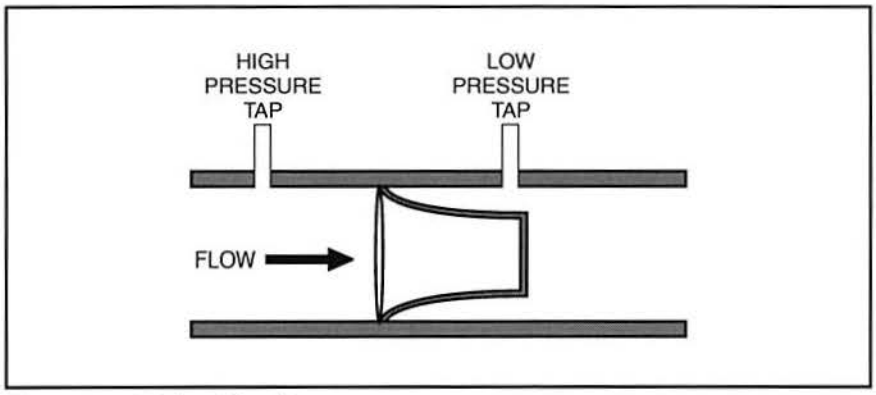

Figure 51. A Flow Nozzle

The smooth transition provided by the flow nozzle creates less turbulence on the high-pressure (upstream) side than an orifice plate and results in more accurate pressure readings. But the increased accuracy comes at a price. Flow nozzles are more expensive than orifice plates.

Copyright © 2007 Amatrol, Inc.

OBJECTIVE 10 DESCRIBE THE OPERATION OF A VENTURI TUBE

A venturi tube is a section of pipe with a tapering inlet that contains the high-pressure tap, a tapering outlet, and a cylindrical constriction in the middle that contains the low pressure tap. The inlet converges to the constriction and the outlet diverges from the constriction. This results in a longer section of pipe before the outlet returns to the original diameter, allowing the recovery of pressure lost because of the restriction.

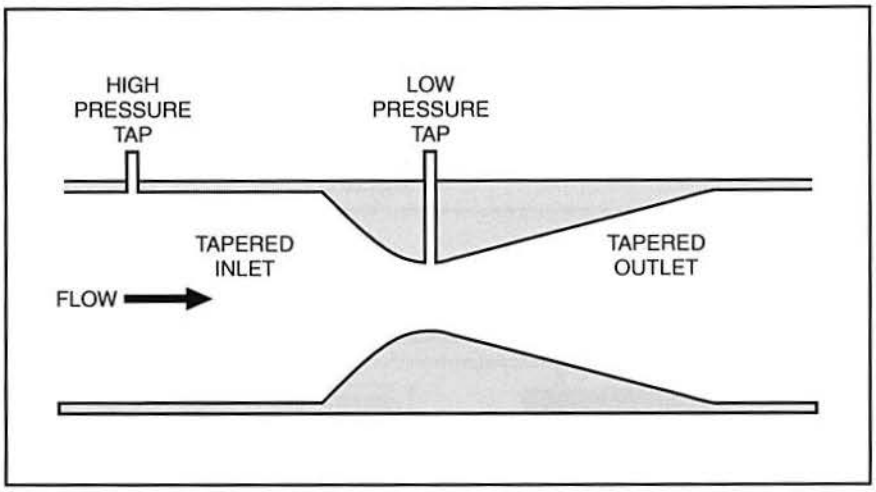

Figure 52. A Venturi Tube

A venturi tube improves on the design of the flow nozzle by providing a smooth transition on both ends. This decreases the turbulence at both ends and provides readings that are more accurate than the readings that the flow nozzle provides. In fact, venturi tubes are the most accurate of the restriction-type flow devices. Again, greater accuracy results in higher cost.

Copyright © 2007 Amatrol, Inc.

SKILL 2 MEASURE FLOW USING A VENTURI TUBE FLOW SENSOR AND A DIFFERENTIAL PRESSURE FLOW TRANSMITTER

Procedure Overview

In this procedure, you will connect a circuit to measure flow using a venturi tube flow sensor and a differential pressure flow transmitter. To do this, you will have to calibrate the differential pressure flow transmitter using the reading on the rotameter and bleed the manifold.

❑ 1. Perform a lockout/tagout.

❑ 2. Perform the following substeps to set up the T5552, as shown in figure 53.

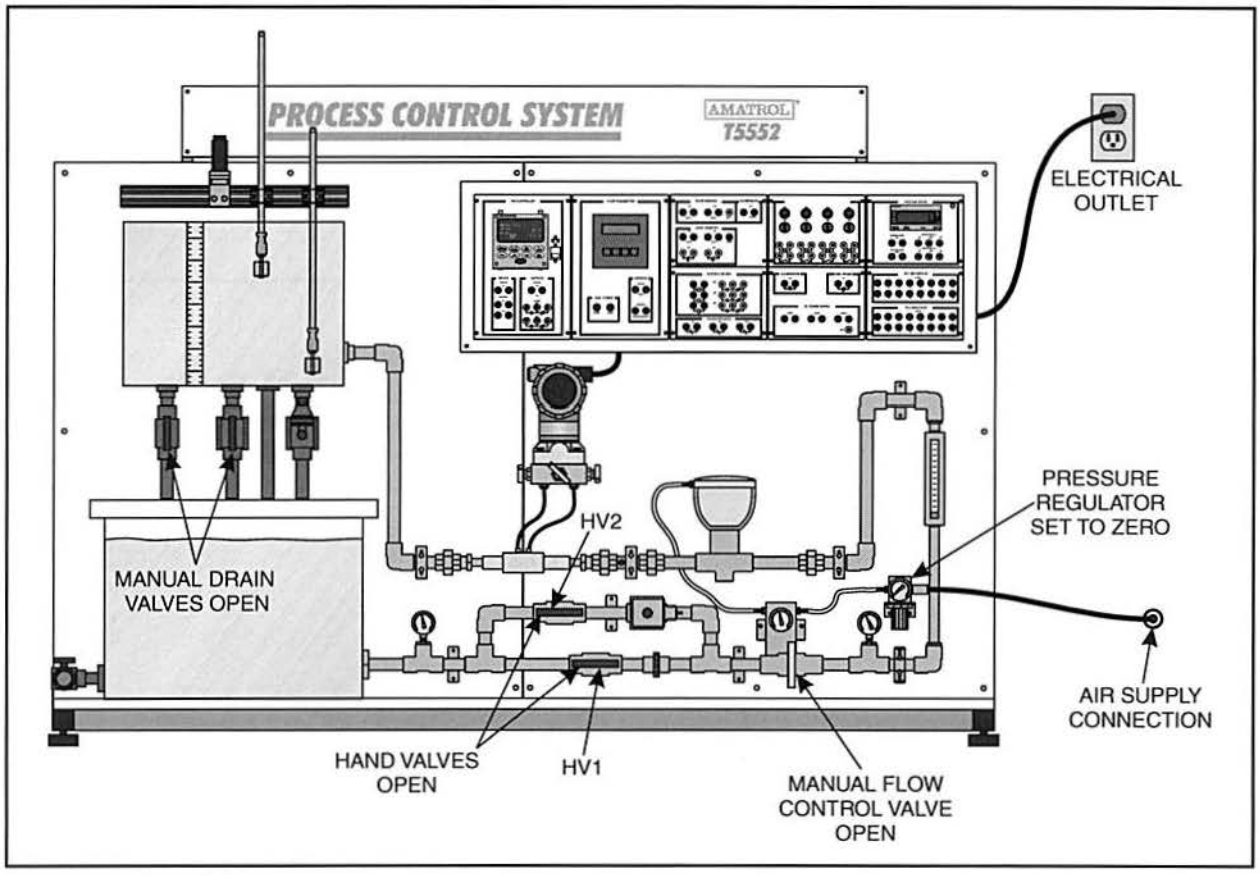

Figure 53. T5552 Setup

A. Connect the power cord to an electrical outlet.

B. Connect the T5552 to the air supply line.

C. Set the pressure regulator to 0 psi.

D. Fill the reservoir tank with water.

E. Open the process tank manual drain valves.

F. Open the manual flow control valve.

Copyright © 2007 Amatrol, Inc.

❑ 3. Connect the circuit shown in figure 54.

This circuit allows you to measure flow using a Venturi tube flow sensor.

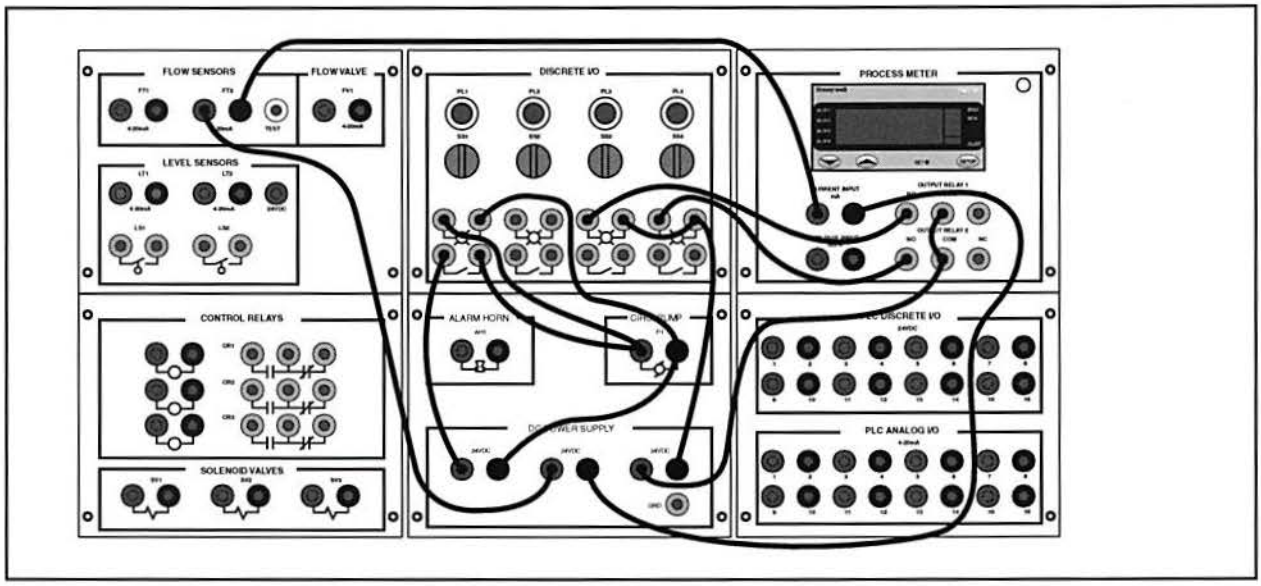

Figure 54. Venturi Tube Flow Sensor and Differential Pressure Transmitter Flow Circuit

Copyright © 2007 Amatrol, Inc.

Figure 55 shows the P&ID for the T5552. The active components and wiring are highlighted.

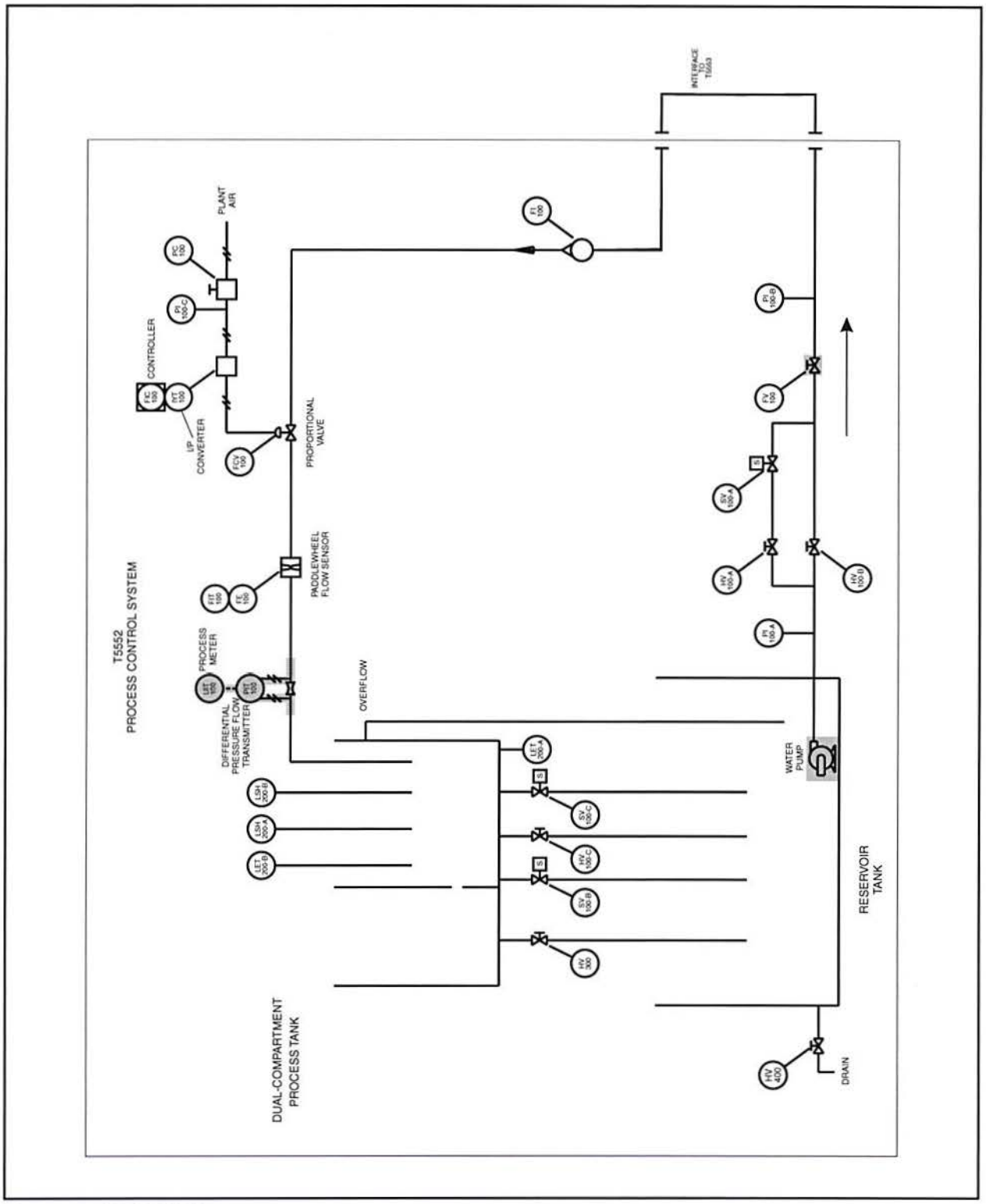

Figure 55. T5552 P&ID

Copyright © 2007 Amatrol, Inc.

Figure 56 shows the wiring diagram for the flow circuit.

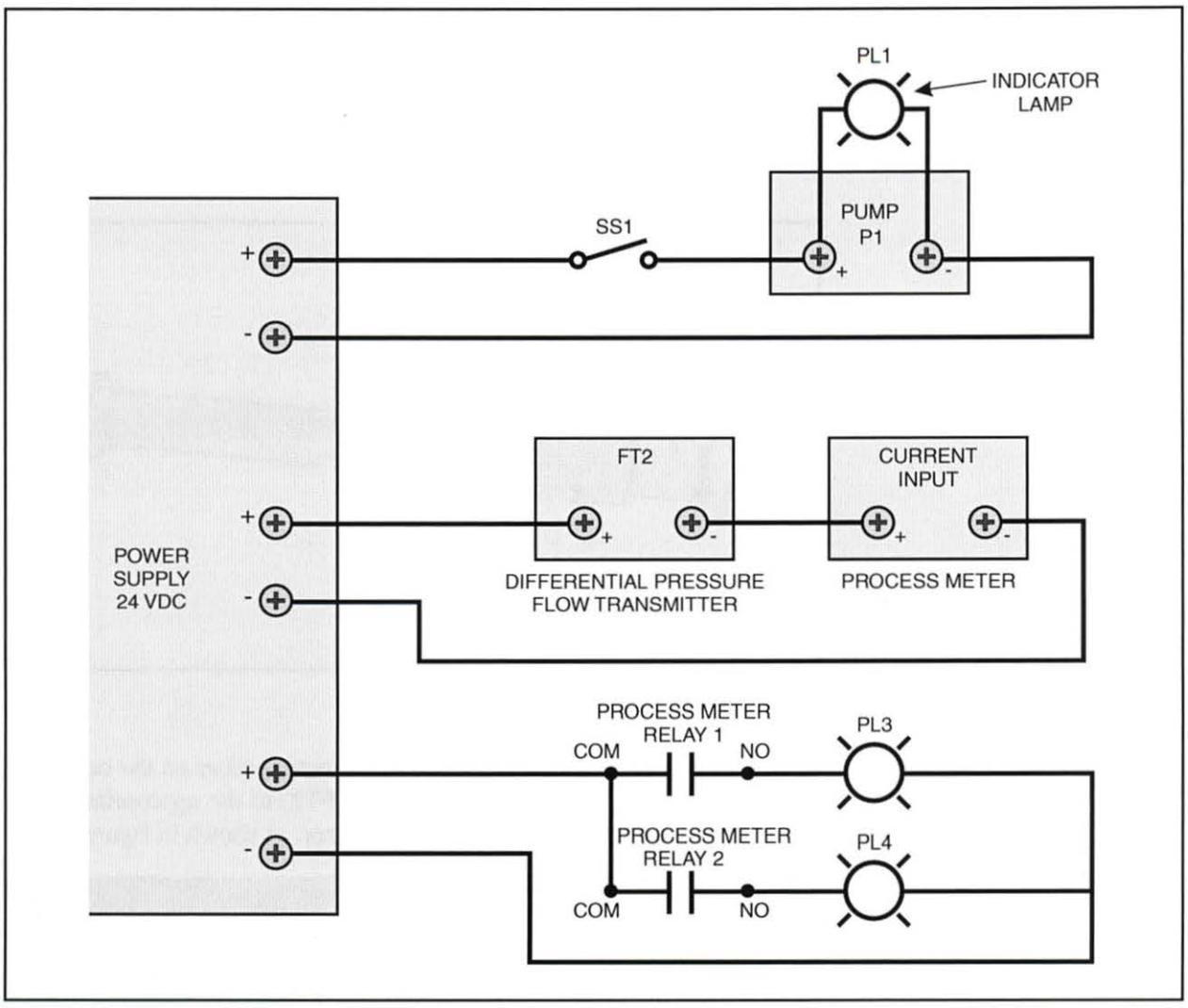

Figure 56. Wiring Diagram for Flow Circuit

Copyright © 2007 Amatrol, Inc.

❑ 4. Install the Venturi tube flow sensor.

Remember that the unions are loosened and tightened by hand. DO NOT use a wrench.

You should notice markings on the body of the sensor, including an arrow, an "L," and an "H," as shown in figure 57. The arrow points in the direction of flow and the "L" and "H" indicate the low-pressure and high-pressure connections, respectively.

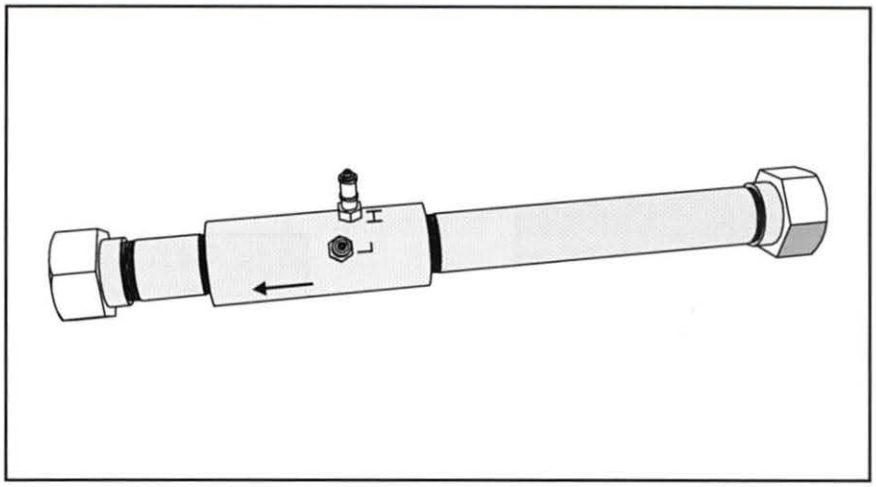

Figure 57. Venturi Tube Flow Sensor

❑ 5. Connect the high-pressure and low-pressure tubes on the bottom of the differential pressure transmitter (FT2) to the appropriate quick connects on the venturi tube flow sensor, as shown in figure 58.

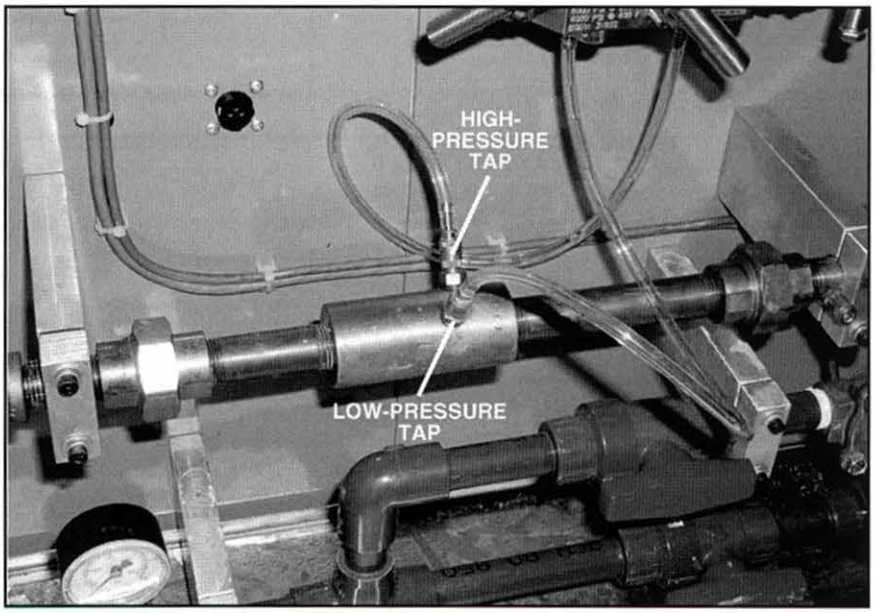

Figure 58. Manifold Pressure Tubes Attached to Venturi Tube Flow Sensor Quick Connects

Copyright © 2007 Amatrol, Inc.

❑ 6. Program the Honeywell UDI 1700 process meter according to the values listed in the table in figure 59. These settings allow the process meter to display the flow rate, which the differential pressure flow sensor measures.

MENU	PARAMETER	VALUE
ConF	inPt	4_20
	ruL	1.1
	rLL	0.0
	ALA 1	P_Lo
	PLA 1	0.4
	AHY 1	0.1
	ALA 2	P_Hi
	PhA 2	0.8
	AHY 2	0.1
	USE 1	A1nd
	USE 2	A2nd

Figure 59. Honeywell UDI 1700 Process Meter Settings

The PLA 1 setting of 0.4 sets the low flow alarm to 0.4 gpm. The PhA 2 setting of 0.8 sets the high flow alarm to 0.8 gpm.

Copyright © 2007 Amatrol, Inc.

❑ 7. Perform the following substeps to bleed the manifold on the differential pressure flow transmitter.

A. Fully open the equalizer valve on the differential pressure transmitter manifold.

B. Fully close (clockwise) the high and low-pressure shut-off valves on each side of the equalizer valve, as also shown in figure 60.

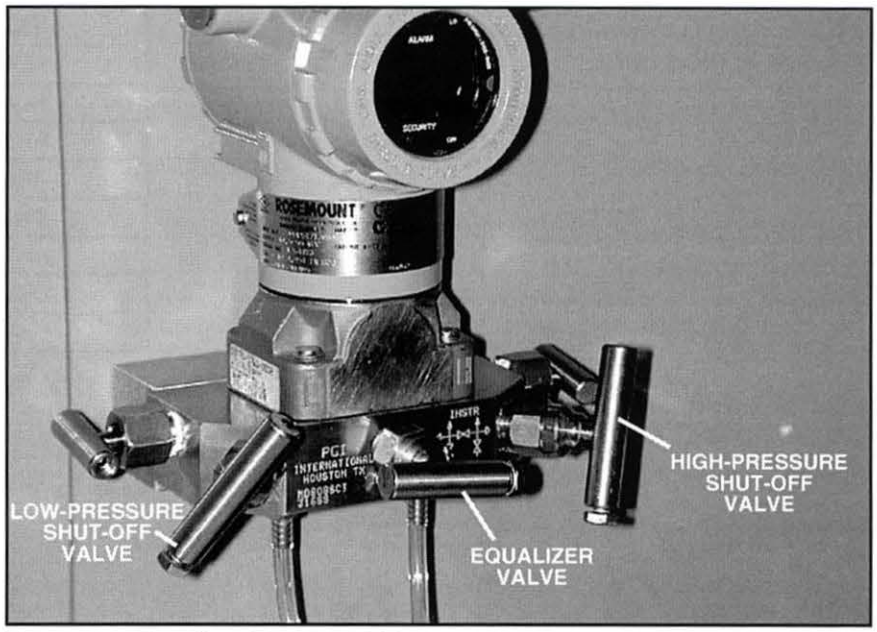

Figure 60. Equalizer Valve and High and Low-Pressure Shut-Off Valves

C. Make sure the bleed valves on the sides of the manifold are fully closed (clockwise).

D. Turn on selector switch **SS1** to start the pump.

E. One at a time, fully open (rotate counterclockwise) the high and low-pressure shut-off valves on each side of the equalizer valve.

F. Slightly open (counterclockwise) the right bleed valve to bleed off air in the tubing and manifold.

G. Close the right bleed valve when all the air has bled out.

H. Slightly open (counterclockwise) the left bleed valve to bleed off air in the tubing and manifold.

I. Close the left bleed valve when all the air has bled out.

J. Re-check the tubing to be sure all of the air is out.

If there is still air in the tubing, repeat steps F – I.

K. Close (clockwise) the equalizer valve.

Copyright © 2007 Amatrol, Inc.

❑ 8. Perform the following substeps to calibrate the differential pressure transmitter.

A. Loosen the left screw that secures the cover plate on top of the transmitter.

B. Rotate the cover plate counterclockwise to expose the zero (Z) and span (S) buttons, shown in figure 61.

The buttons may not be visible, but you can feel for their location.

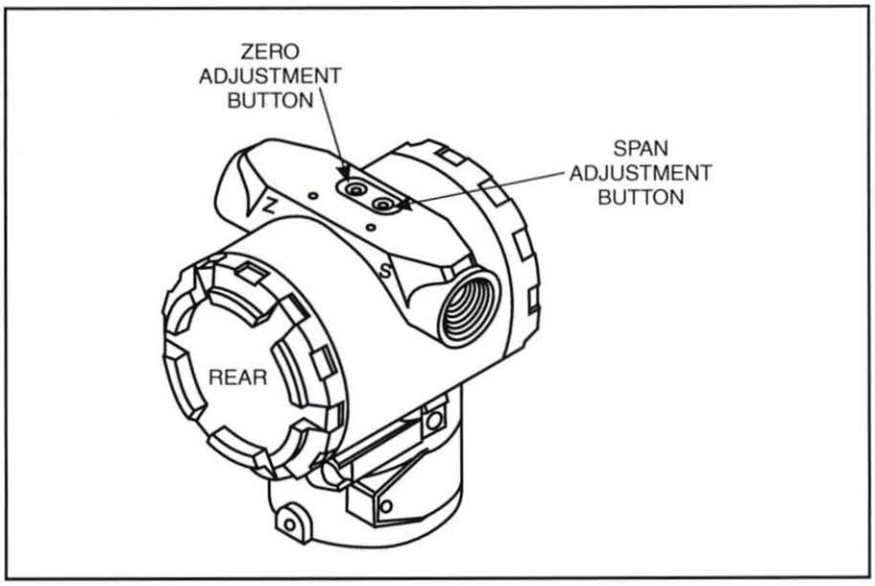

Figure 61. Span and Zero Adjustment Buttons

C. Turn off selector switch **SS1** to stop the water flow into the tank.

D. Observe that the flow reading on the rotameter indicates 0 gpm because there is no flow in the system.

E. Using the right-angle Allen wrench, depress and hold down the **zero** (**Z**) button on the top right of the transmitter for 2 seconds.

The LCD display on the differential pressure transmitter should flash "PASS" indicating that the zero value has been accepted and set.

F. Now, turn on selector switch **SS1** to start the pump and allow water to flow into the tank.

Copyright © 2007 Amatrol, Inc.

G. Adjust the manual flow control valve until the rotameter indicates a flow of 1.1 gpm, as shown in figure 62.

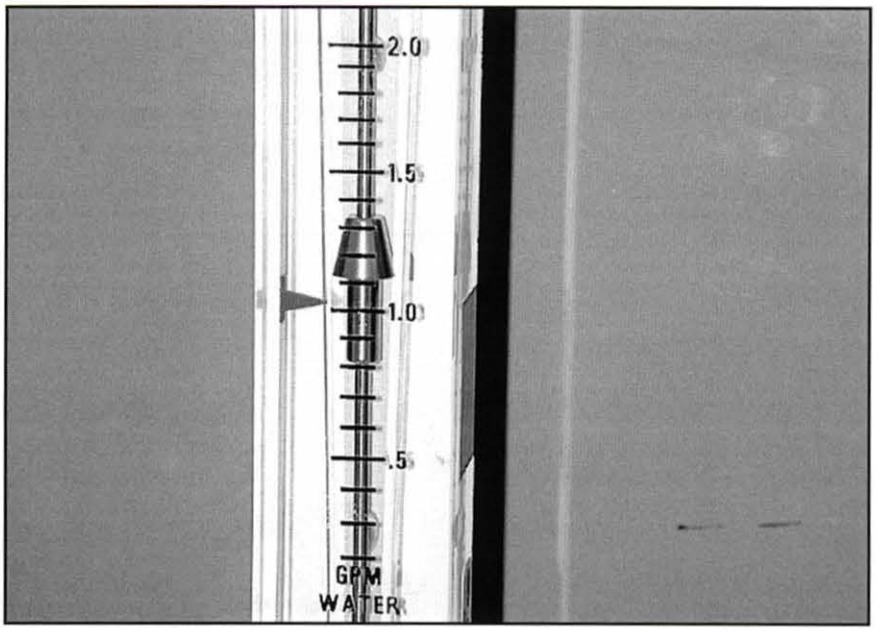

Figure 62. Flow Rate of 1.1 gpm

H. Using the right-angle Allen wrench, press and hold down the **span** (**S**) button on the top left of the transmitter for 2 seconds.

The LCD display on the differential pressure transmitter should flash "PASS" indicating that the span value has been accepted and set.

I. Turn off **SS1** to stop the pump and reset the zero.

J. Close the cover plate on top of the transmitter and retighten the retaining screw.

The transmitter is now calibrated to give an analog output of 4–20 mA that corresponds to a flow rate of 0–1.1 gpm respectively. The system is now set up so that process meter indicates the flow rate.

❑ 9. Perform the following substeps to change the flow rate and test the circuit alarms.

A. Turn on **SS1** to start the pump.

B. Fully close (clockwise) the manual flow control valve.

The process meter should display 0, indicating that there is no flow in the system. Indicator light PL3 should also be lit, indicating a low flow rate alarm.

C. Open the manual flow control valve until the rotameter indicates that the flow rate is 0.5 gpm.

The process meter display should agree very closely with the rotameter reading. Indicator light PL3 should be off, indicating sufficient water flow through the system.

Copyright © 2007 Amatrol, Inc.

D. Increase the flow rate in increments of 0.2 gpm using the manual flow control valve.

Record in the following table the process meter readings when the flow rate, according to the rotameter, reaches the values listed in the table.

MEASURED FLOW RATES	
ROTAMETER READING (gpm)	PROCESS METER READING (gpm)
0.5	
0.7	
0.9	
1.1	

E. Determine if the readings are within 0.1 gpm of each other?

_____(Yes/No)

You should find that the readings are very close. If they are not, recalibrate the differential pressure flow transmitter and the process meter.

When you exceed 0.8 gpm (the process meter reading should closely match the rotameter reading), you should notice that indicator light PL4 has turned on, signifying a high flow rate alarm. The indicator light turns on because the flow rate has increased beyond the set point value of 0.8 gpm.

F. Close the manual flow control valve enough to drop the flow rate below 0.8 gpm.

You should notice that indicator light PL4 turns off.

G. Turn off selector switch **SS1** to stop the pump.

❑ 10. Perform the following substeps to shut down the T5552.

A. Close the process tank hand drain valves when the tank empties.

B. Turn off the main circuit breaker.

C. Disconnect all leads.

Copyright © 2007 Amatrol, Inc.

OBJECTIVE 11 DESCRIBE THE OPERATION OF A PITOT TUBE

A pitot tube is a differential pressure flow sensor consisting of two concentric tubes (i.e. tube within a tube). The inner tube has an opening parallel to the direction of flow that senses the high pressure and the outer tube has openings perpendicular to the flow that sense the low pressure.

The most common type of pitot tube has a 90° bend and is installed in a pipe with the nozzle facing the direction of flow, as figure 63 shows. There are other designs of the pitot tube in which there is no bend. The design can vary depending on personal choice and the needs of the application.

During operation, fluid flows into the nozzle of the pitot tube, creating an impact pressure and a static pressure. The impact pressure is the high pressure sensed at the inner tube opening and the static pressure is the low pressure sensed at the outer tube openings.

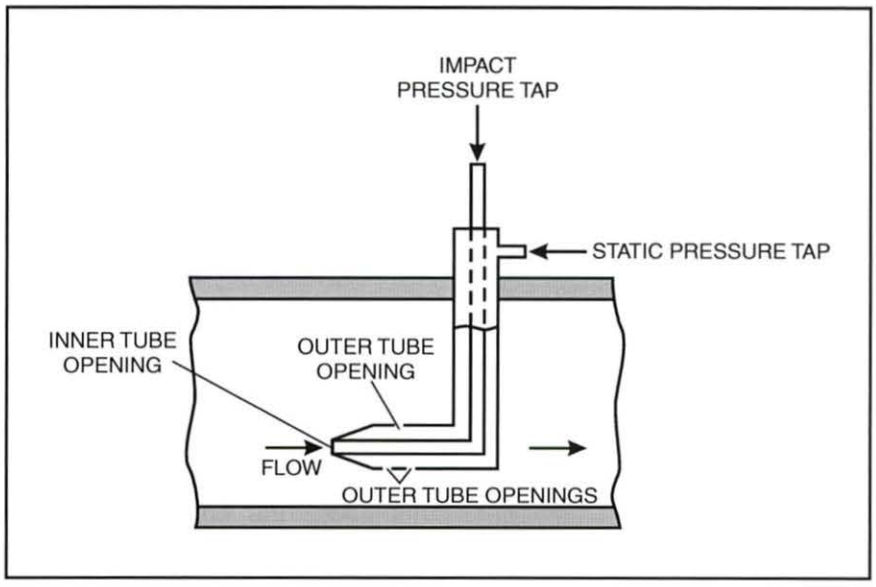

Figure 63. A Pitot Tube

The pitot tube represents one of the earliest methods of flow measurement. However, the applications of pitot tubes are limited to high velocity applications, such as air flow measurements in ventilation systems because these types of flows are highly turbulent. Therefore, the pitot tube can be inserted to almost any depth and still give an accurate reading. For low velocity flows, the insertion depth is more critical for accurate measurement because the velocity is different at different depths.

Copyright © 2007 Amatrol, Inc.

SKILL 3 MEASURE FLOW USING A PITOT TUBE FLOW SENSOR AND A DIFFERENTIAL PRESSURE FLOW TRANSMITTER

Procedure Overview

In this procedure, you will connect a circuit to measure flow using a pitot tube flow sensor and a differential pressure flow transmitter. To do this, you will have to calibrate the differential pressure flow transmitter using the reading on the rotameter and bleed the manifold.

- ❑ 1. Perform a lockout/tagout.
- ❑ 2. Perform the following substeps to set up the T5552, as shown in figure 64.

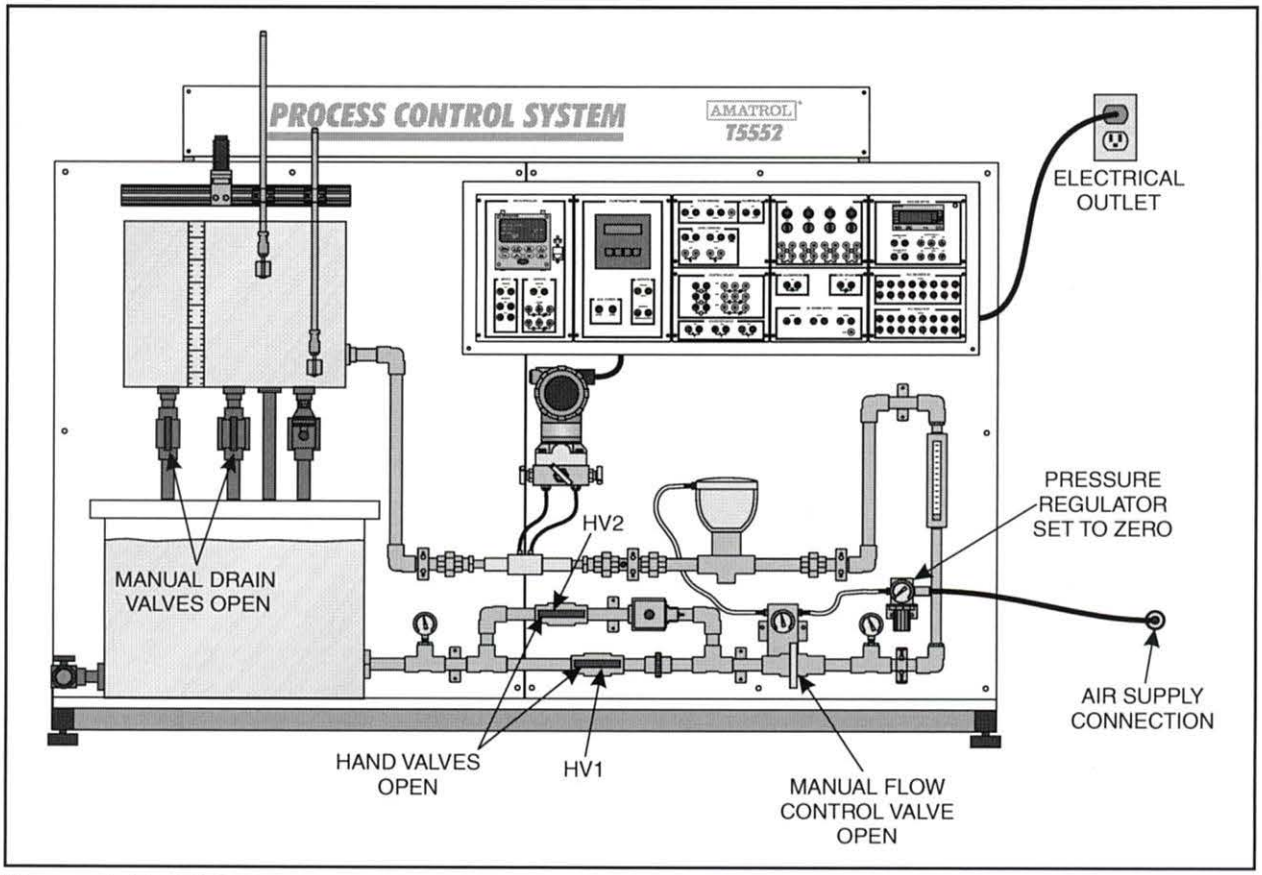

Figure 64. T5552 Setup

A. Connect the power cord to an electrical outlet.
B. Connect the T5552 to the air supply line.
C. Set the pressure regulator to 0 psi.
D. Fill the reservoir tank with water.
E. Open the process tank manual drain valves.
F. Open the manual flow control valve.

Copyright © 2007 Amatrol, Inc.

❑ 3. Connect the circuit shown in figure 65.

This circuit allows you to measure flow using a pitot tube flow sensor.

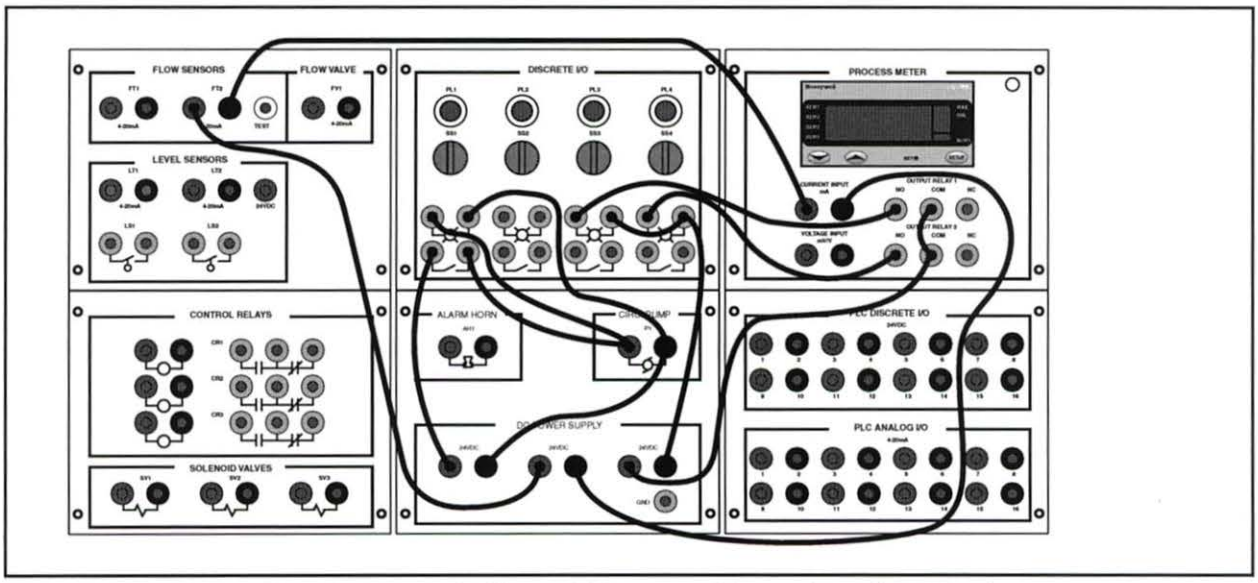

Figure 65. Pitot Tube Flow Sensor and Differential Pressure Transmitter Flow Circuit

Copyright © 2007 Amatrol, Inc.

Figure 66 shows the P&ID for the T5552. The active components and wiring are highlighted.

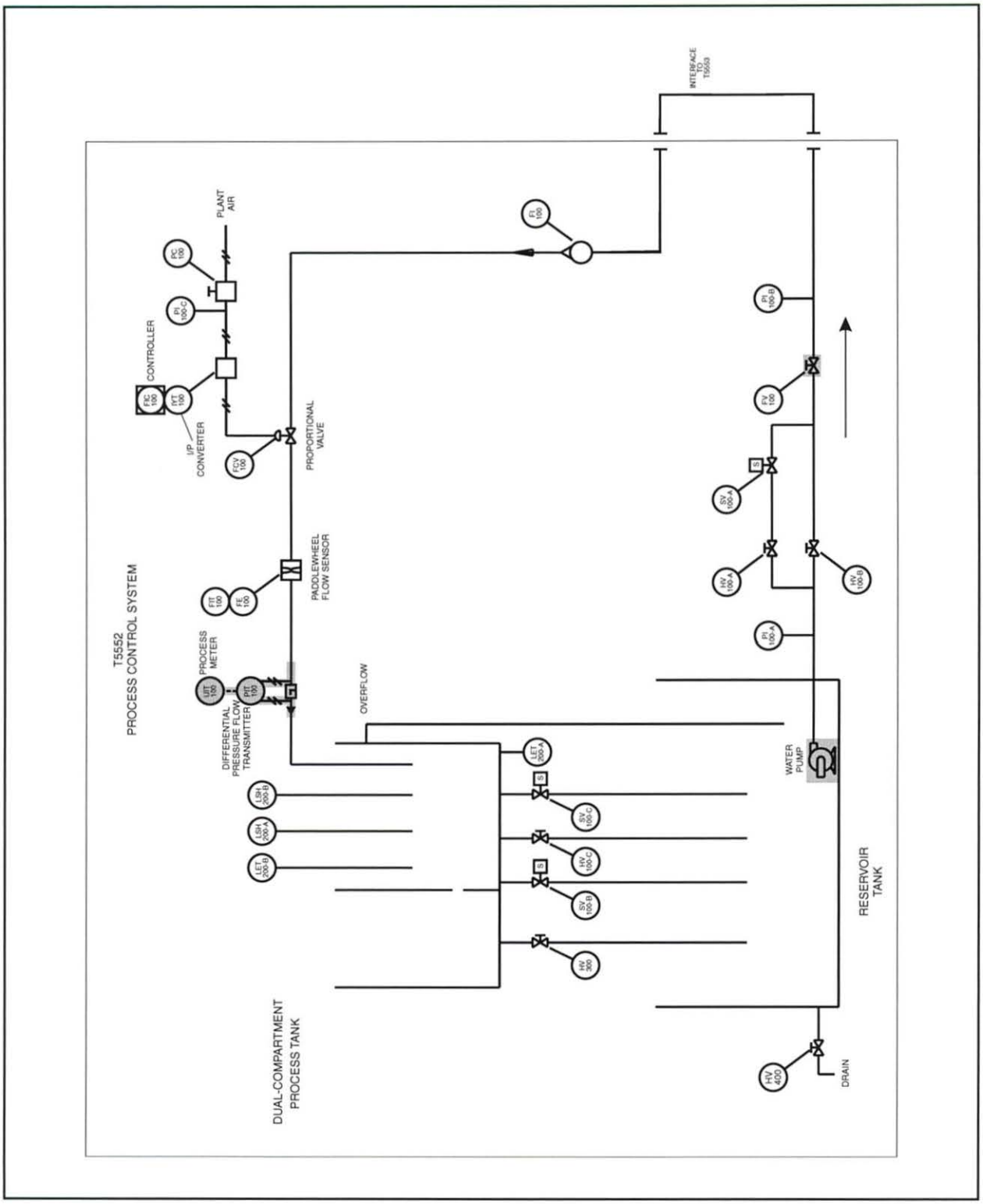

Figure 66. T5552 P&ID

Copyright © 2007 Amatrol, Inc.

Figure 67 shows the wiring diagram for the flow circuit.

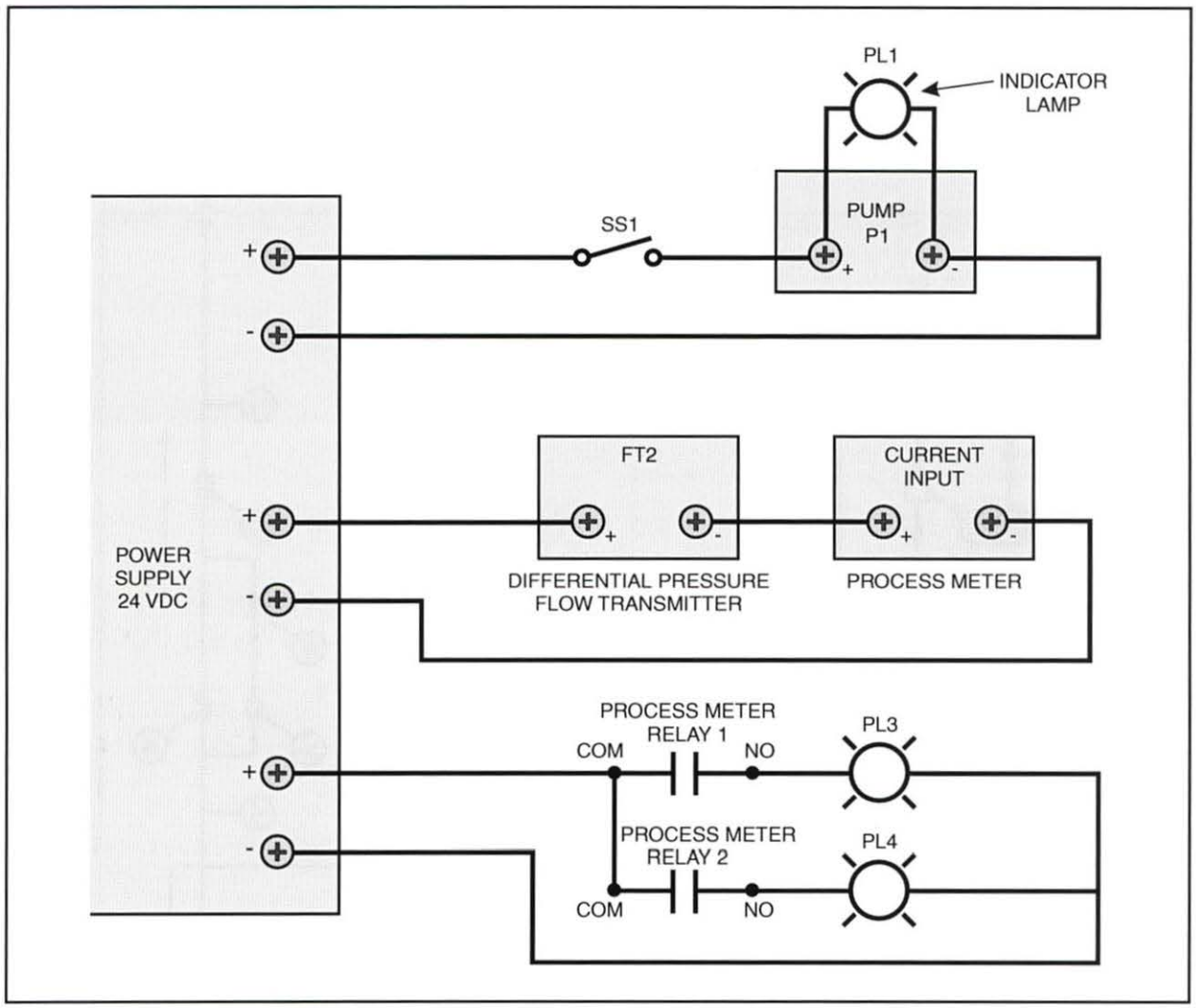

Figure 67. Wiring Diagram for Flow Circuit

Copyright © 2007 Amatrol, Inc.

❑ 4. Install the pitot tube flow sensor.

Make sure the unions are hand tight only. DO NOT use a wrench to tighten them.

You should notice an arrow labeled "FLOW" on the sensor body that indicates the flow direction, as shown in figure 68.

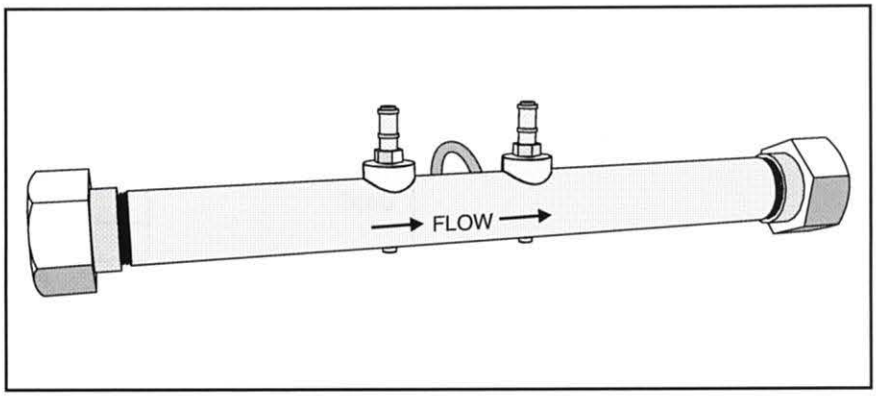

Figure 68. Pitot Tube Flow Sensor

❑ 5. Connect the two tubes on the bottom of the differential pressure transmitter to the quick connects on the pitot tube flow sensor, as shown in figure 69.

Make sure you connect the tube on the high side (H) of the transmitter to the connector on the upstream side of the pitot tube flow sensor, as also shown in figure 69.

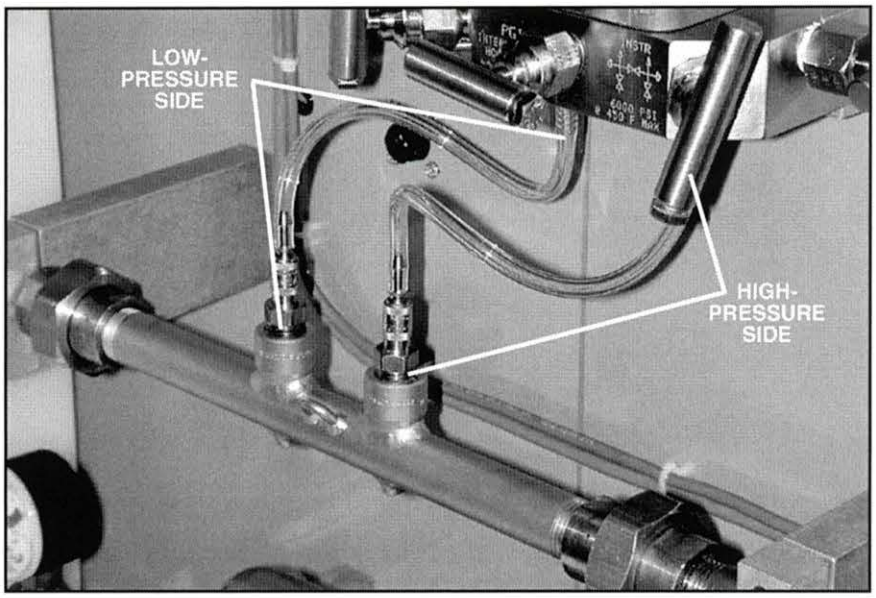

Figure 69. Manifold Air Pressure Lines Attached to Pitot Tube Flow Sensor Quick Connects

Copyright © 2007 Amatrol, Inc.

❑ 6. Program the Honeywell UDI 1700 process meter according to the values listed in the table in figure 70. These settings allow the process meter to display the flow rate, which the differential pressure flow sensor measures.

MENU	PARAMETER	VALUE
ConF	inPt	4_20
	ruL	1.5
	rLL	0.0
	ALA 1	P_Lo
	PLA 1	0.5
	AHY 1	0.1
	ALA 2	P_Hi
	PhA 2	1.3
	AHY 2	0.1
	USE 1	A1nd
	USE 2	A2nd

Figure 70. Honeywell UDI 1700 Process Meter Settings

For this setup, the low flow rate alarm value (PLA 1) is 0.5 gpm and the high flow rate alarm value (PhA 2) is 1.3 gpm.

Copyright © 2007 Amatrol, Inc.

- ❑ 7. Bleed the manifold.
- ❑ 8. Perform the following substeps to calibrate the differential pressure flow transmitter.
  - A. Set the zero with the flow at **0 gpm**.
  - B. Adjust the manual flow control valve until it is fully open.
  - C. Record the flow rate indicated on the rotameter.

    Flow Rate _____(gpm)

    You should find that the flow rate is near 2.0 gpm, the maximum flow rate that the rotameter measures. The flow rate is much higher than the orifice plate and the venturi tube because the pressure drop across the sensor is much lower.
  - D. Adjust the manual flow control valve to adjust the flow to **1.5 gpm**.
  - E. Set the span on the differential pressure transmitter when the flow rate is 1.5 gpm.
- ❑ 9. Perform the following substeps to change the flow rate and test the circuit alarms.
  - A. Fully close (clockwise) the manual flow control valve.

    The process meter should display 0, indicating that there is no flow in the system. Indicator light PL3 should also be lit, indicating a low flow rate alarm.
  - B. Open the manual flow control valve until the rotameter indicates that the flow rate is 0.6 gpm.

    The process meter display should agree very closely with the rotameter reading. Indicator light PL3 should be off, indicating sufficient water flow through the system.

Copyright © 2007 Amatrol, Inc.

C. Increase the flow rate in increments of 0.2 gpm using the manual flow control valve.

Record in the following table the process meter readings when the flow rate, according to the rotameter, reaches the values listed in the table.

MEASURED FLOW RATES	
ROTAMETER READING (gpm)	PROCESS METER READING (gpm)
0.6	
0.8	
1.0	
1.2	
1.4	

Are the readings within 0.1 gpm of each other?_____(Yes/No)

You should find that the readings are very close. If they are not, recalibrate the differential pressure flow transmitter and the process meter.

When you exceed 1.3 gpm (the process meter reading should closely match the rotameter reading), you should notice that indicator light PL4 turns on, signifying a high flow rate alarm. The indicator light turns on because the flow rate has increased beyond the set point value of 1.3 gpm.

D. Close the manual flow control valve enough to drop the flow rate below 1.3 gpm.

You should notice that indicator light PL4 turns off.

E. Turn off selector switch **SS1** to stop the pump.

❑ 10. Perform the following substeps to shut down the T5552.

A. Open tank drain valves HV3 and HV4 to drain the tank.

B. Close tank drain valves HV3 and HV4 when the tank empties.

C. Turn off the main circuit breaker.

D. Disconnect all leads.

Copyright © 2007 Amatrol, Inc.

SEGMENT 3

SELF REVIEW

1. A _____ is a differential pressure flow sensor that constricts the flow through a contoured plate.

2. The smooth transition provided by the flow nozzle creates less _____ on the high-pressure side than an orifice plate.

3. The most accurate differential pressure flow sensor is the _____, which has smooth transitions on both sides of the restriction.

4. _____ flow sensors are among the oldest types of sensors.

5. Fluid flow through the nozzle on a pitot tube creates both impact pressure and _____ pressure.

6. A _____ is a section of pipe with a tapering inlet that contains the high-pressure tap, a tapering outlet, and a cylindrical constriction in the middle that contains the low pressure tap.

Copyright © 2007 Amatrol, Inc.

SEGMENT 4

FLOW CONTROL USING DIFFERENTIAL PRESSURE FLOW MEASUREMENT

OBJECTIVE 12 DESCRIBE THE OPERATION OF A CLOSED LOOP FLOW SYSTEM USING A DIFFERENTIAL PRESSURE FLOW SENSOR

Read This

Closed loop systems that use a differential pressure flow sensor must have a way to convert the differential pressure to an electrical signal that indicates the flow rate to the controller. This is normally accomplished using a differential pressure flow transmitter.

Figure 71 shows a closed loop system that uses a differential pressure transmitter and flow sensor. The transmitter receives a differential pressure signal from the sensor. It then uses internal electronics to extract the square root of the differential pressure value and transmits a 4-20 mA signal, which indicates the volumetric flow rate, to the controller. The Lo and Hi input parameters in the controller correspond to the flow rate when the differential pressure is at a minimum and maximum, respectively.

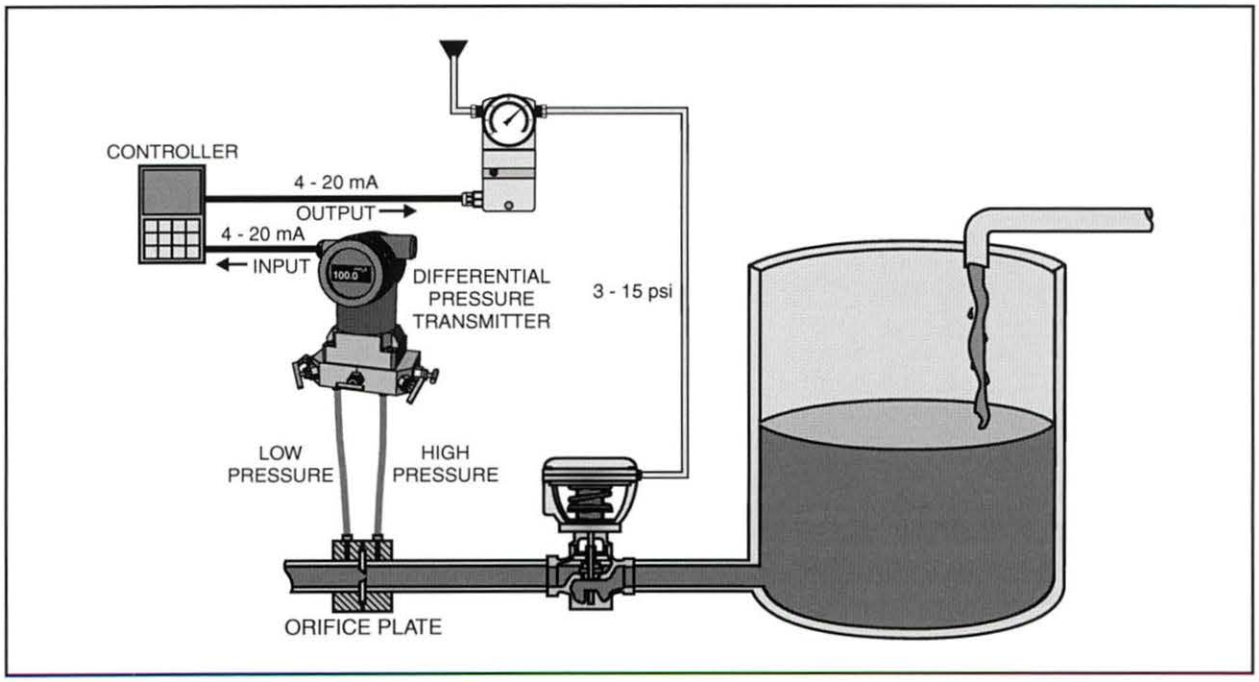

Figure 71. Closed Loop Flow System Using a Differential Pressure Flow Sensor

Copyright © 2007 Amatrol, Inc.

The controller uses the analog signal to measure and correct error in the system. This process occurs in a flow system that uses a differential pressure transmitter in the same manner it does in other systems (e.g. level, temperature, etc.). The controller signal is transmitted to a final control element to effect a change in the manipulated variable that results in little or no error.

Flow is the manipulated and controlled variable in differential pressure flow control systems. As a result, PI control is most often used because it provides an immediate response and eliminates offset. Derivative control is not normally necessary because flow control systems naturally respond quickly.

Copyright © 2007 Amatrol, Inc.

Procedure Overview

In this procedure, you will connect a circuit to control the flow of water using a PID controller and a differential pressure sensor. To do this, you will have to calibrate the differential pressure transmitter and program the PID controller.

❑ 1. Perform a lockout/tagout.

❑ 2. Perform the following substeps to set up the T5552, as shown in figure 72.

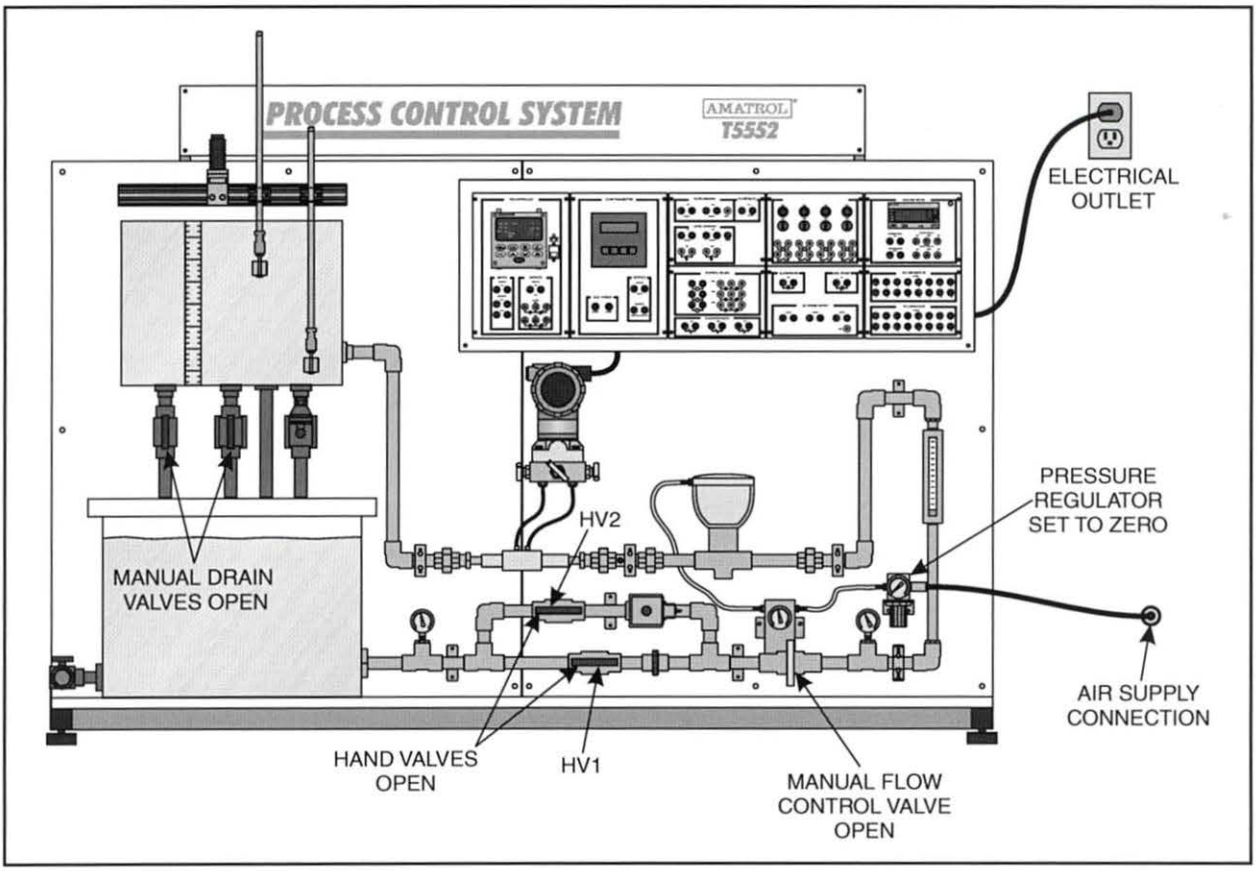

Figure 72. T5552 Setup

A. Connect the power cord to an electrical outlet.

B. Connect the T5552 to the air supply line.

C. Set the pressure regulator to 0 psi.

D. Fill the reservoir tank with water.

E. Open the process tank manual drain valves.

F. Open the manual flow control valve.

Copyright © 2007 Amatrol, Inc.

❑ 3. Connect the circuit shown in figure 73.

This circuit allows you to control flow through the system using a Honeywell controller.

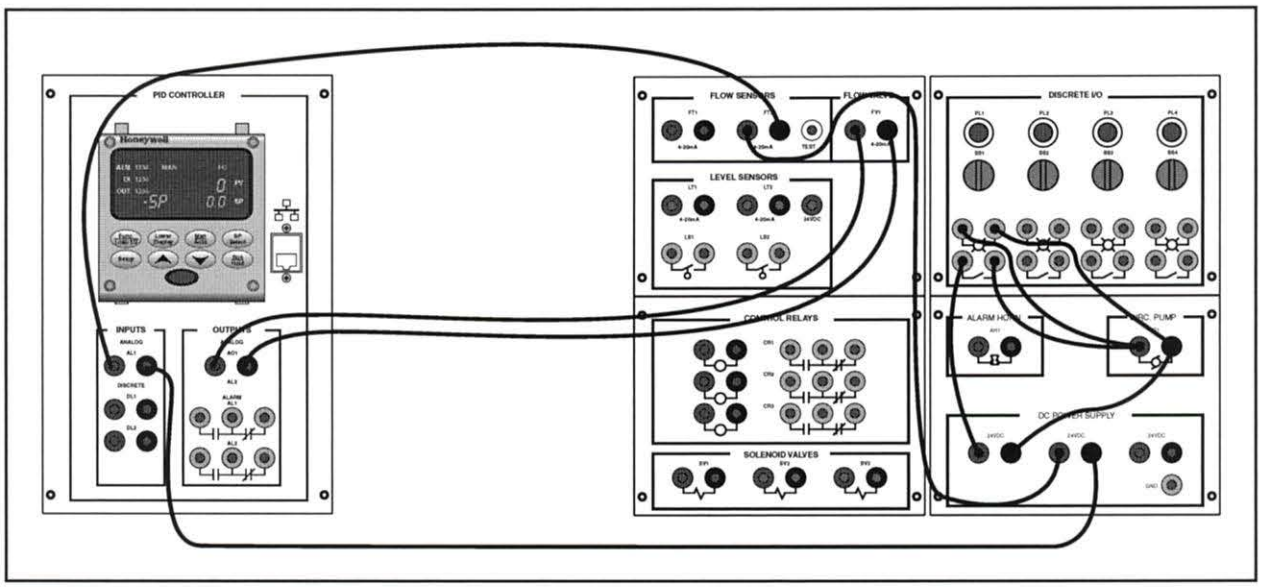

Figure 73. Flow Control Circuit Using a Pitot Tube Flow Sensor and Differential Pressure Transmitter

Copyright © 2007 Amatrol, Inc.

Figure 74 shows the P&ID for the T5552. The active components and wiring are highlighted.

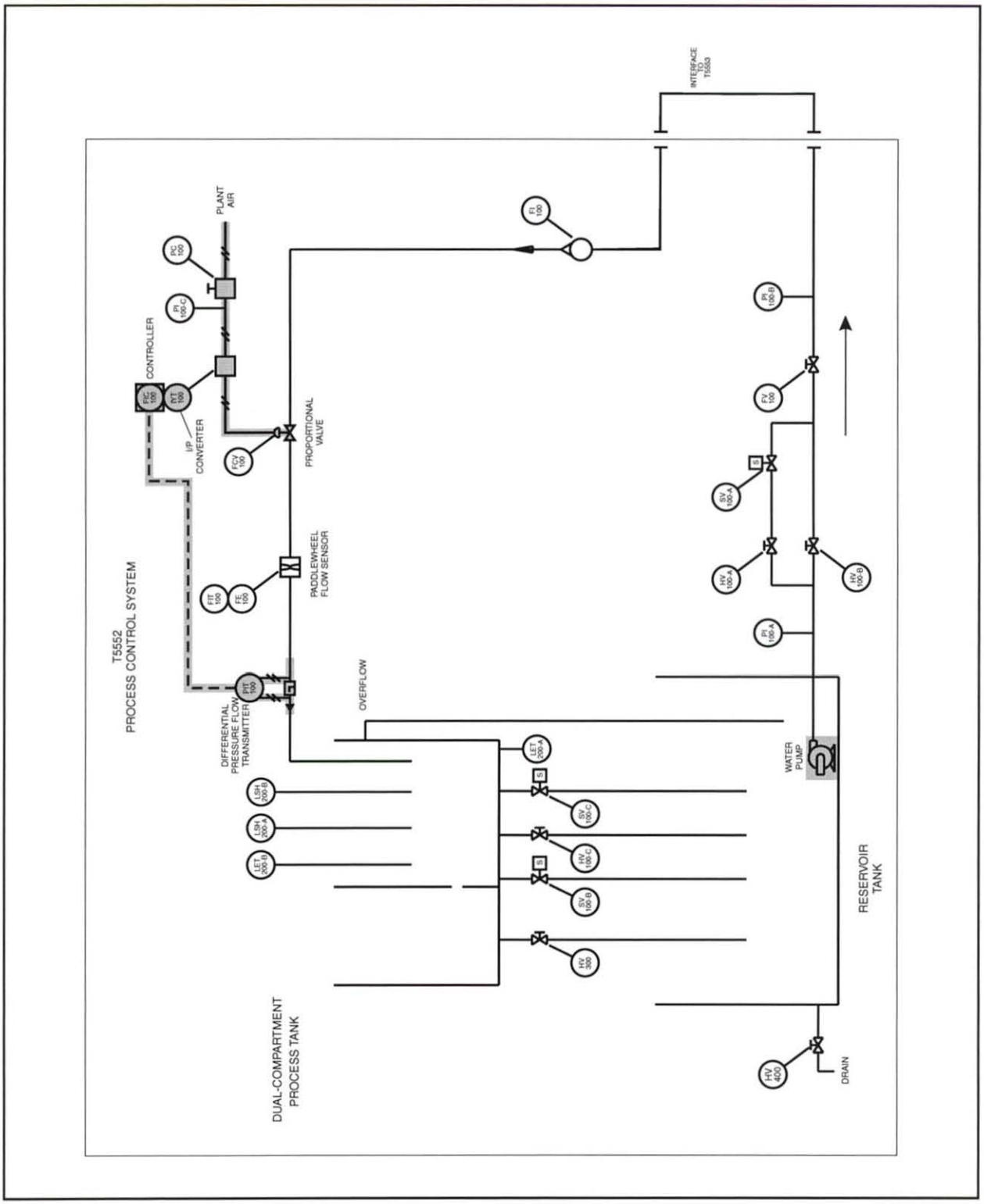

Figure 74. T5552 P&ID

Copyright © 2007 Amatrol, Inc.

Figure 75 shows the wiring diagram for the circuit.

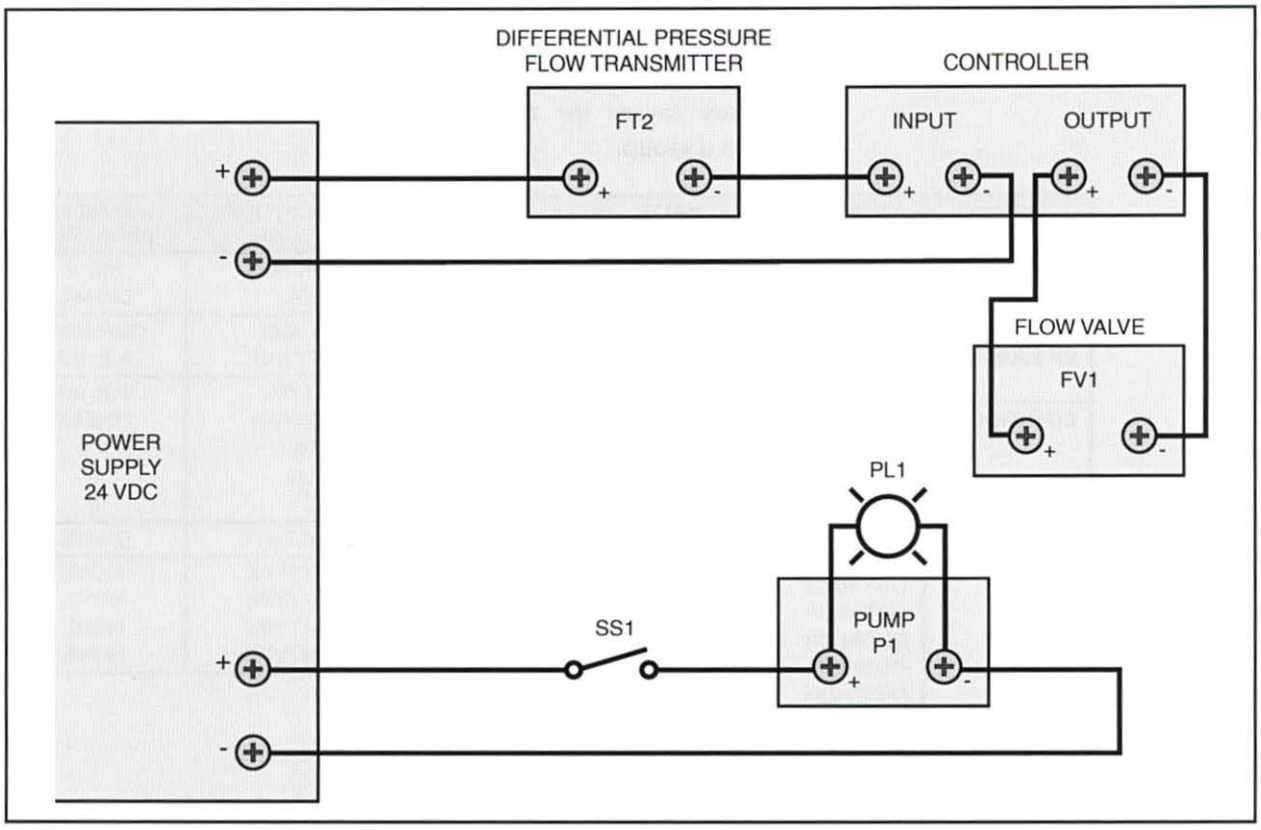

Figure 75. Wiring Diagram for Flow Control Circuit

Copyright © 2007 Amatrol, Inc.

❑ 4. Program the Honeywell PID controller according to the parameters listed in the tables in figure 76.

Recall that if you press the Setup key, the controller scrolls through all of the parameter groups and pressing the Func Loop 1/2 key causes the controller to scroll through the parameters within a group.

GROUP PROMPT	FUNCTION PROMPT	VALUE OR SELECTION
TUNING	GAIN	2.0
	RATE MIN	0
	RSET MIN	0.25
SP RAMP	SP RAMP	DISABL
	SP RATE	DISABL
CONTROL	PV SOURC	INP 1
	PID SETS	1 ONLY
	LSP'S	1 ONLY
	SP HiLIM	1
	SP LoLIM	0
	ACTION	DIRECT
	OUT RATE	DISABLE
	PCT/M UP	0
	PCT/M DN	0
	OUTHiLIM	100
	OUTLoLIM	0
	I Hi LIM	100
	I Lo LIM	0
	DROP OFF	0
	FAILMODE	NO LAT
	FAILSAFE	0
	MAN OUT	0
	AUTO OUT	0

GROUP PROMPT	FUNCTION PROMPT	VALUE OR SELECTION
ALGROTHM	CONT ALG	PID A
	TIMER	DISABL
OUTPUT	OUT ALG	CURRENT
	C1 RANGE	4-20 mA
INPUT 1	IN1 TYPE	4-20 mA
	XMITTER1	LINEAR
	IN1 HI	2.0
	IN1 LO	0
	BIAS	0
COM	ComSTATE	DISABL
ALARMS	A1S1TYPE	NONE
	A1S2TYPE	NONE
	A2S1TYPE	NONE
	A2S2TYPE	NONE

Figure 76. PID Controller Settings

❑ 5. Make sure the PID controller is in the manual mode.

❑ 6. Change the controller's set point to **1.0 gpm**.

❑ 7. Bleed the manifold.

❑ 8. Calibrate the differential pressure transmitter. To do this, set the zero adjustment for **0 gpm** and the span adjustment for **2.0 gpm**.

The transmitter is now calibrated to give an analog output of 4 – 20 mA that corresponds to a flow rate of 0 – 2.0 gpm respectively. The PID controller should now display the flow rate in gpm.

NOTE

You will need a right-angle Allen wrench to perform calibration of the differential pressure transmitter.

Copyright © 2007 Amatrol, Inc.

❑ 9. Perform the following substeps to operate the flow control loop.

A. Make sure the manual tank drain valves HV3 and HV4 are open.

B. Turn on selector switch **SS1** to start the pump.

C. Press the **MAN/AUTO** button on the front of the controller to place the controller in automatic mode of operation.

The controller should now read and control at 1.0 gpm of flow.

D. Record the reading on the controller and the rotameter.

Controller Reading _____(gpm)

Rotameter Reading _____(gpm)

You should find that both components indicate the same reading (1.0 gpm).

E. Slightly close the manual flow control valve.

The controller should respond by opening the diaphragm valve to increase flow.

NOTE

You may have to adjust the proportional gain and integral (RSET MIN) setting to get better control results.

F. Change the set point to **0.8 gpm**.

The controller should now be reading and controlling at 0.8 gpm of flow.

Therefore, you can control the flow by changing the set point.

G. Slightly open the manual flow control valve. The controller should respond by closing the diaphragm valve to decrease flow.

H. Turn off selector switch **SS1** to stop the pump.

As you can see, the system responds quickly to disturbances. This is characteristic of flow control systems.

❑ 10. Perform the following substeps to shut down the T5552.

A. Close the process tank hand drain valves when the tank is empty.

B. Turn off the main circuit breaker.

C. Disconnect the circuit.

Copyright © 2007 Amatrol, Inc.

SELF REVIEW

1. Closed loop systems that use a differential pressure flow sensor must have a way to convert the differential pressure to an electrical signal that indicates the flow rate to the _____.

2. Differential pressure transmitters use internal electronics to extract the square root of the differential pressure value and transmit a _____ analog electrical signal.

3. Flow is the _____ and controlled variable in differential pressure flow control systems.

4. _____ control is not normally necessary for flow control systems because they naturally respond quickly.

5. The controller uses the signal from the differential pressure transmitter to measure and _____ error in the process.

6. _____ control is most often used in automatic flow control systems.

Copyright © 2007 Amatrol, Inc.