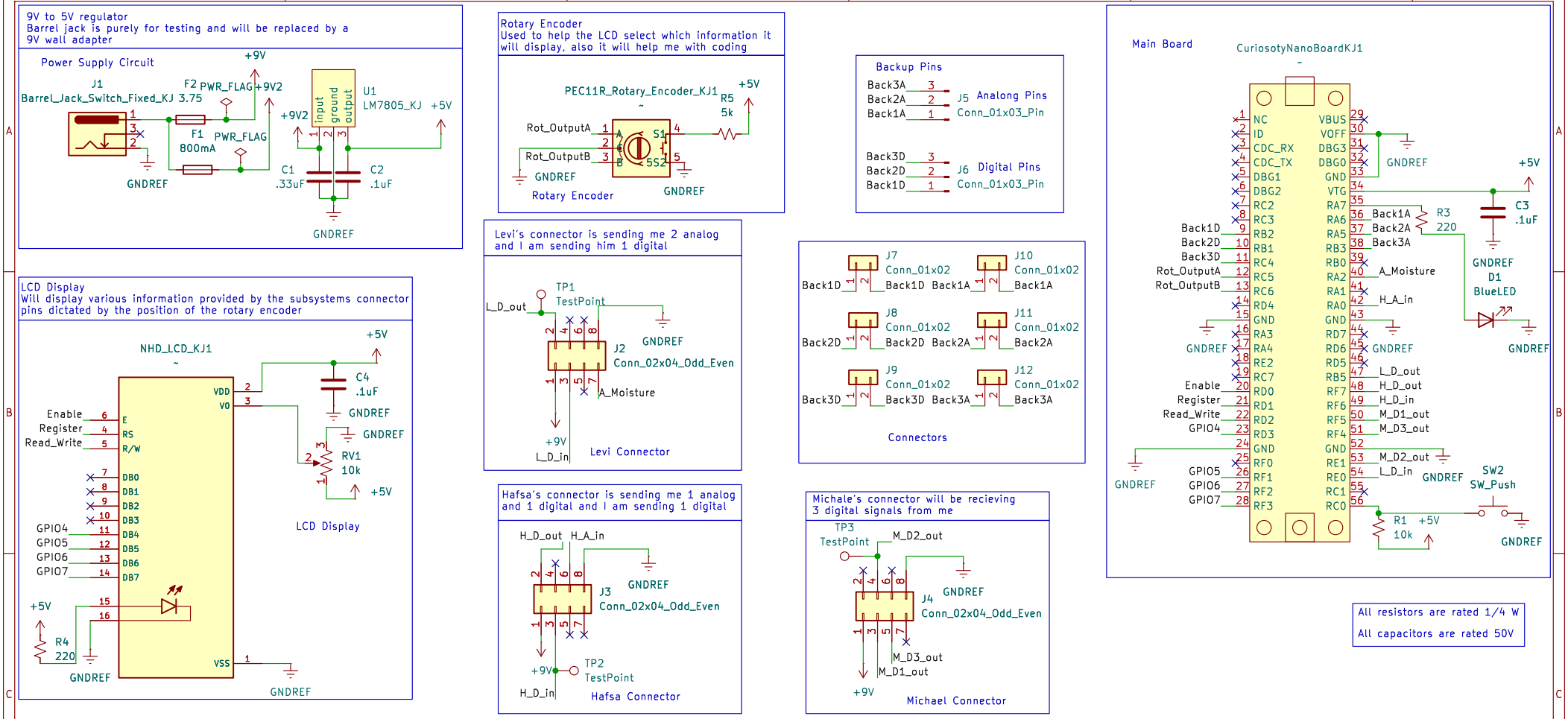


**Team211**

Sheet: /

File: KeltonJensenSubsystemSchematicDesign.kicad_sch

***Title: Subsystem Schematic Design Kelton Jensen***

| | | |
|---|---|---|
| Size: A4 | Date: 2025-11-12 | **Rev: 6** |
| KiCad E.D.A. 9.0.4 | | Id: 1/1 |