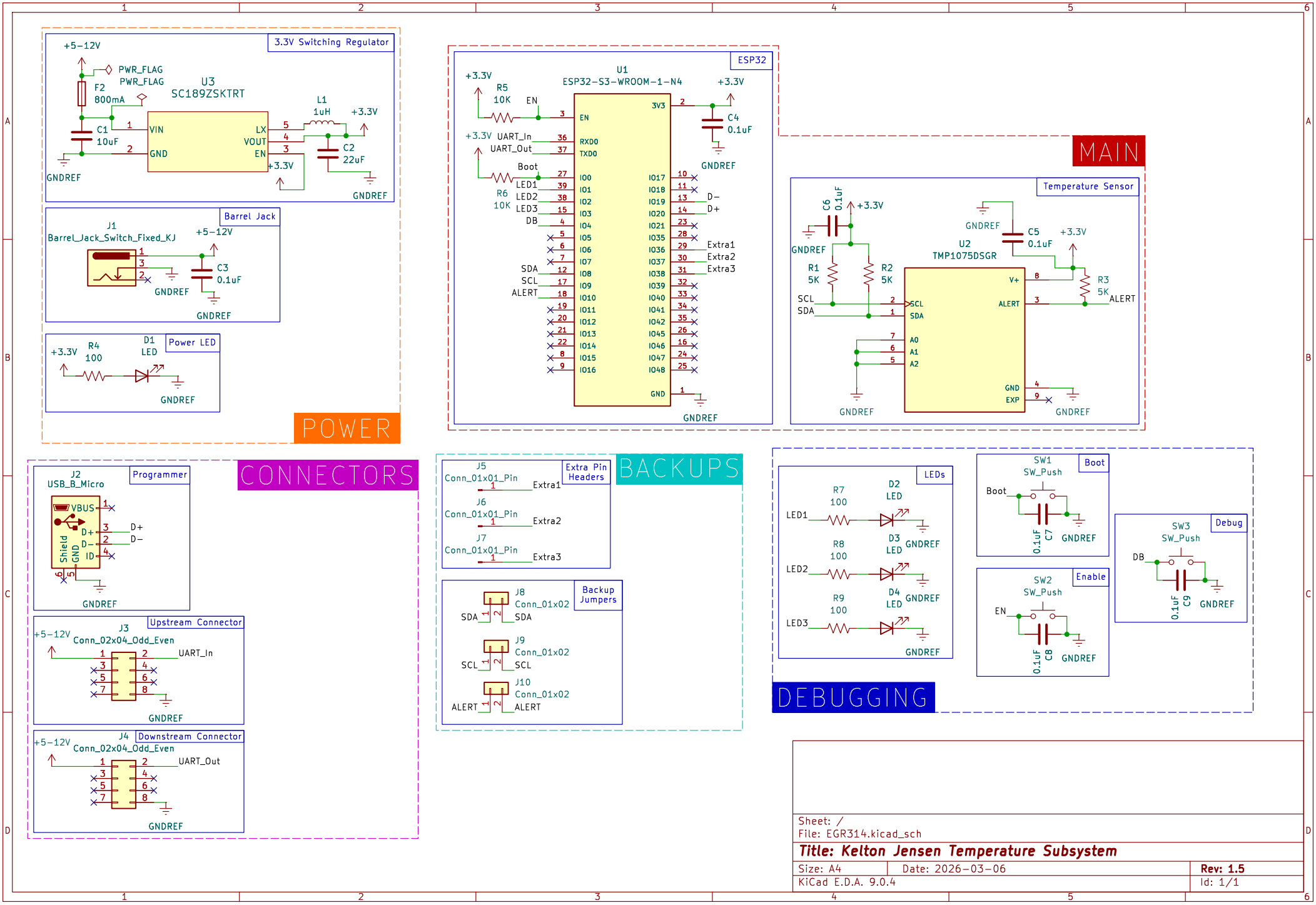

Sheet: /
File: EGR314.kicad_sch

Title: Kelton Jensen Temperature Subsystem

Size: A4	Date: 2026-03-06	Rev: 1.5
KiCad E.D.A. 9.0.4		Id: 1/1