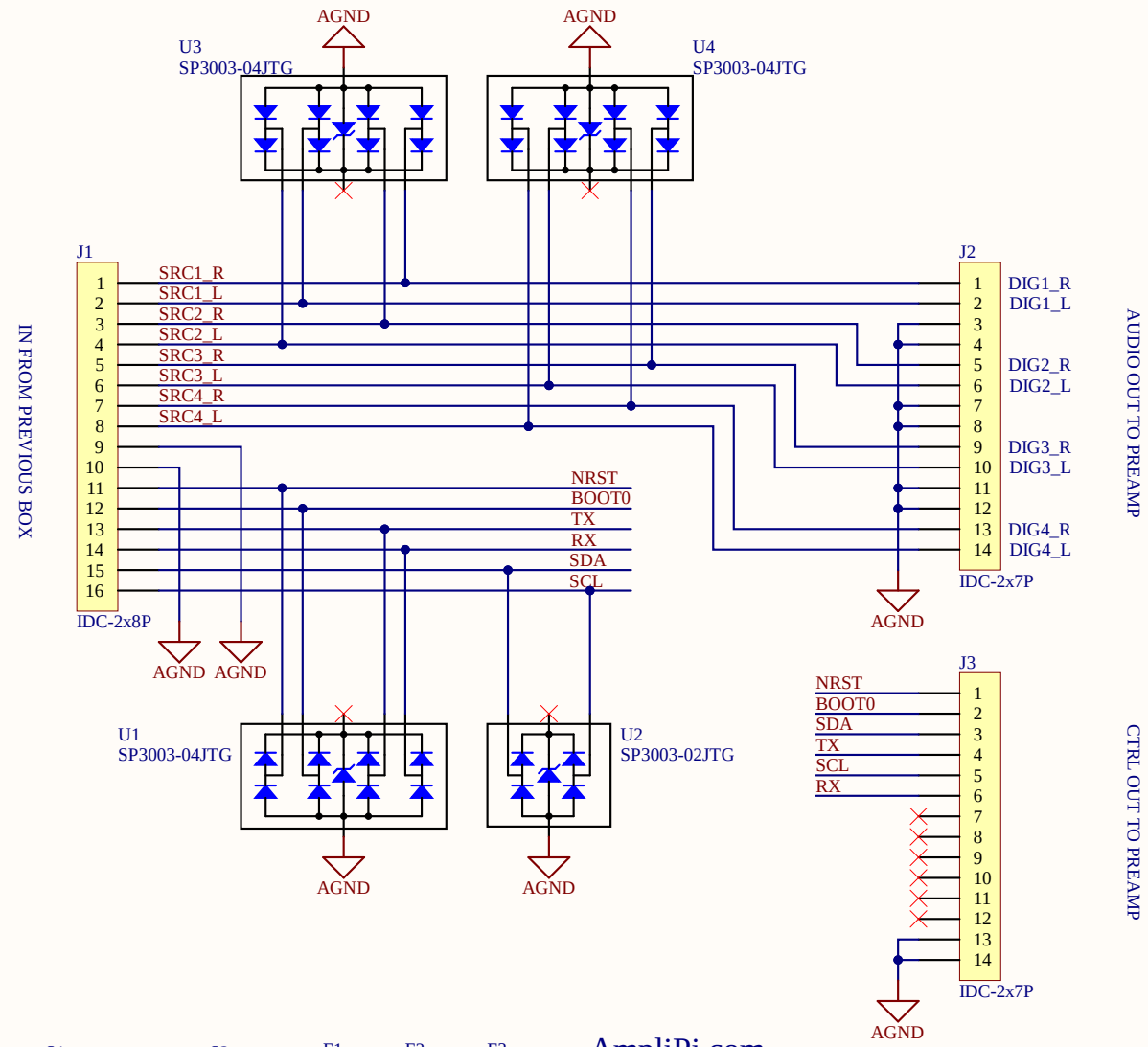

AmpliPi.com

Title	Expansion Board
Rev	3.A
Date	11/05/2021
Author	JG
Sheet #	1 of 1

© 2021

micronova

AmpliPi Home Audio System