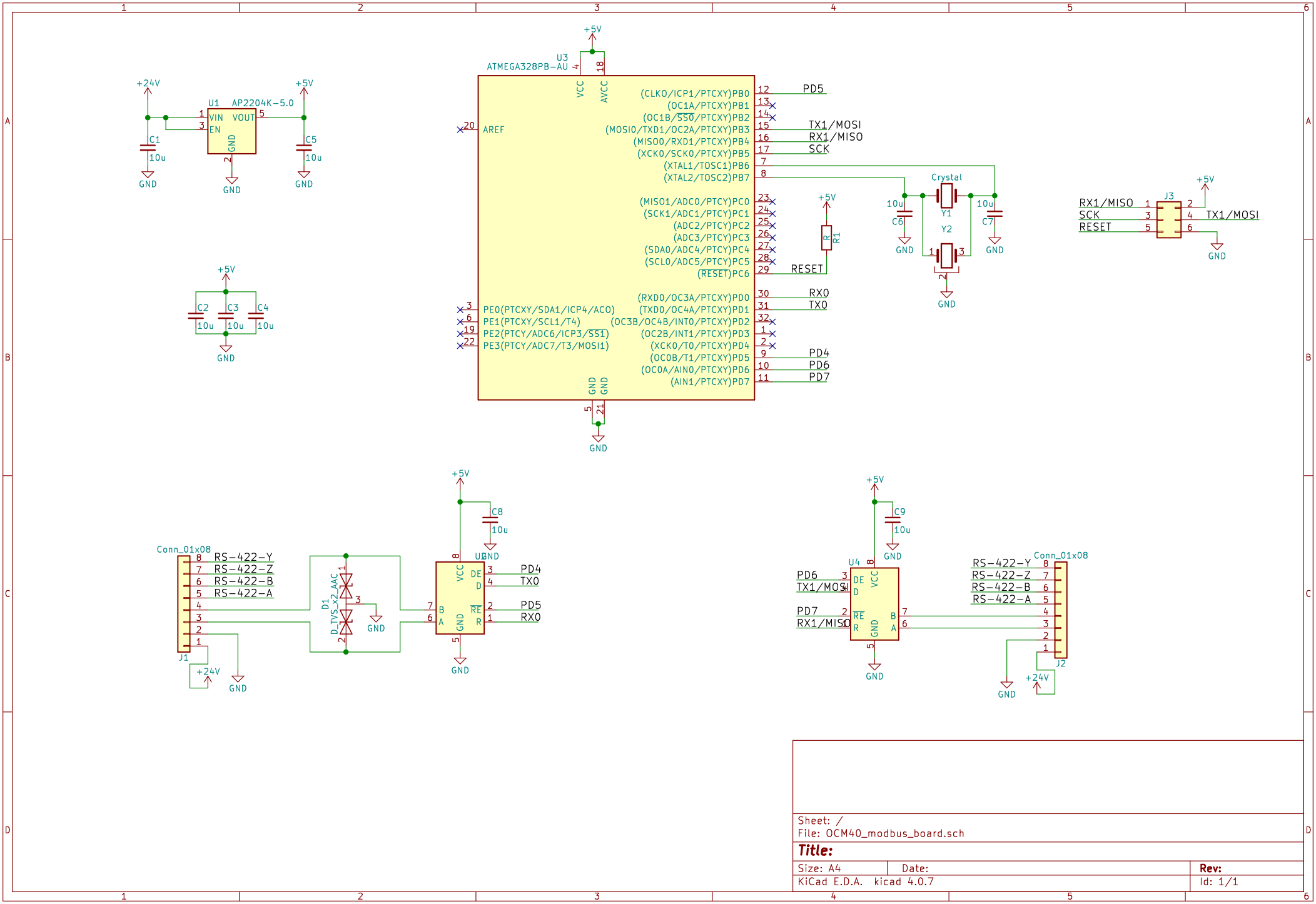


Sheet: /
File: OCM40_modbus_board.sch

**Title:**

| Size: A4 | Date: | Rev: |
|---|---|---|
| KiCad E.D.A. kicad 4.0.7 | | Id: 1/1 |