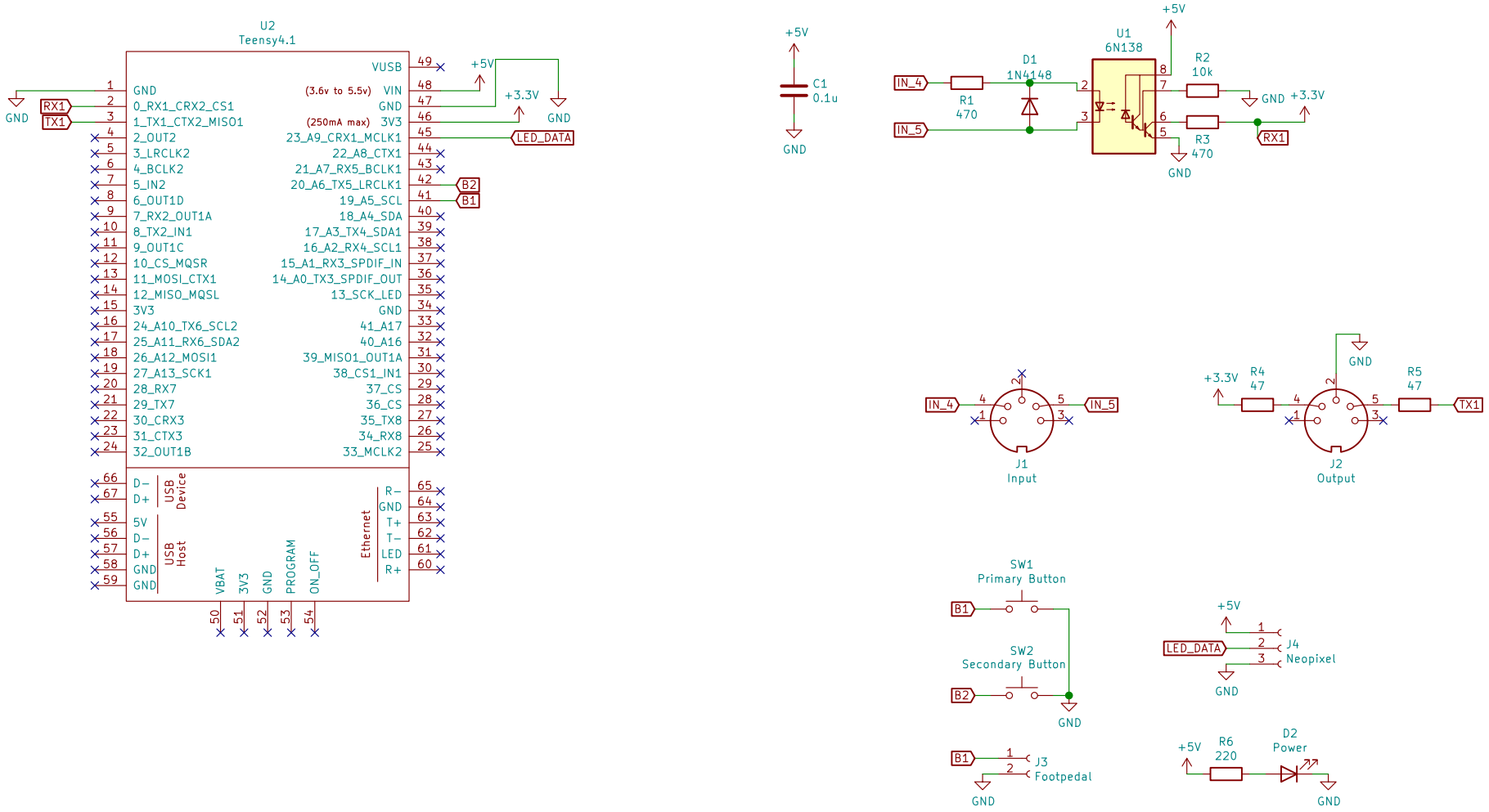

Based on schematic from https://www.pjrc.com/teensy/td_libs_MIDI.html

Lukas Severinghaus

Sheet: /

File: LoopPedal.sch

Title: MIDI Loop Pedal

Size: A4	Date: 2021-09-09	**Rev: 1**
KiCad E.D.A. kicad (5.1.6)-1		Id: 1/1