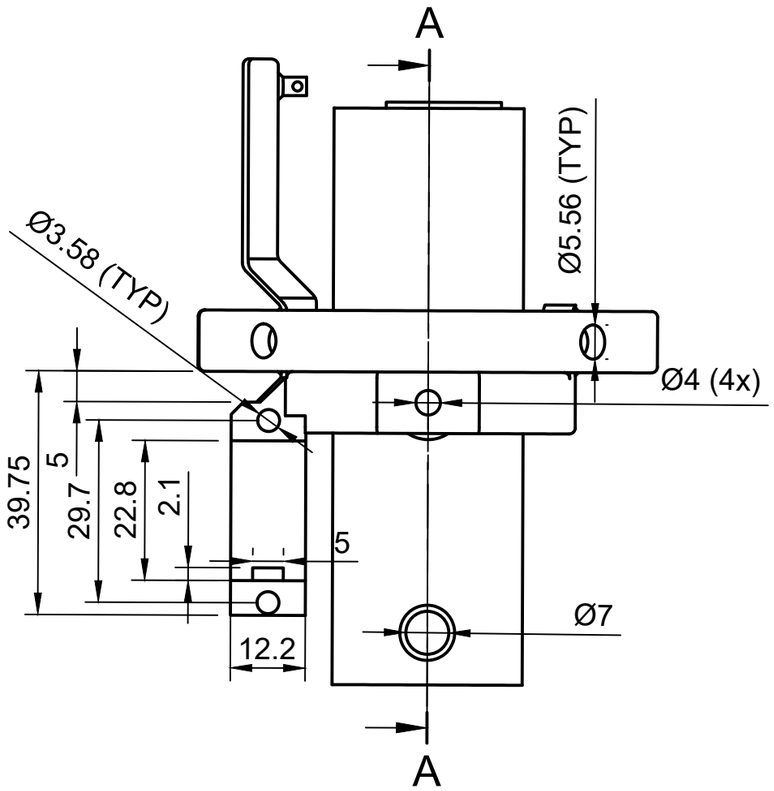

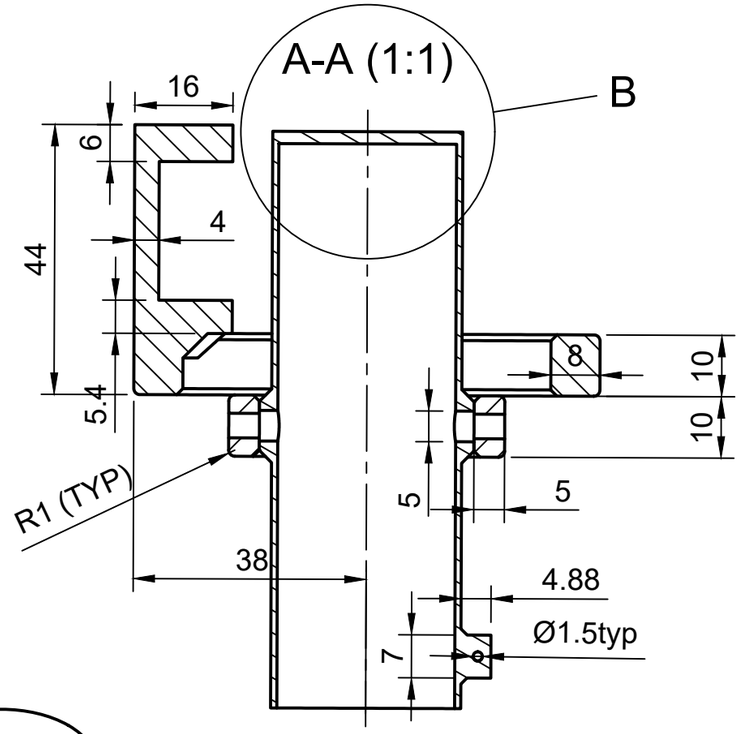

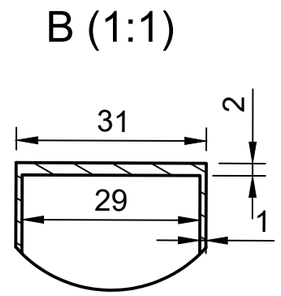

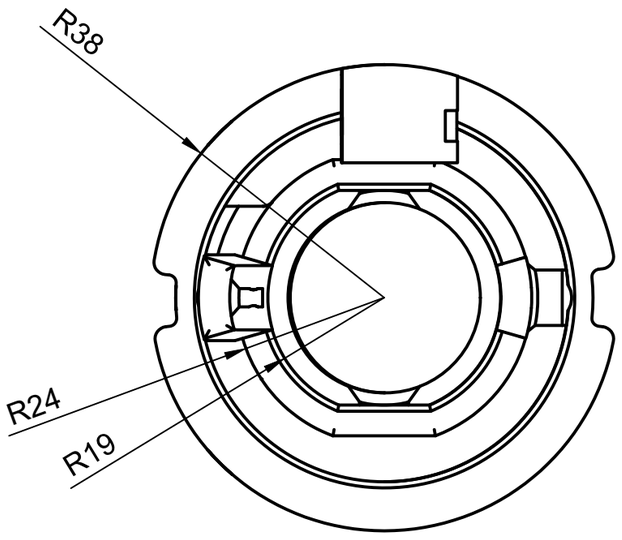

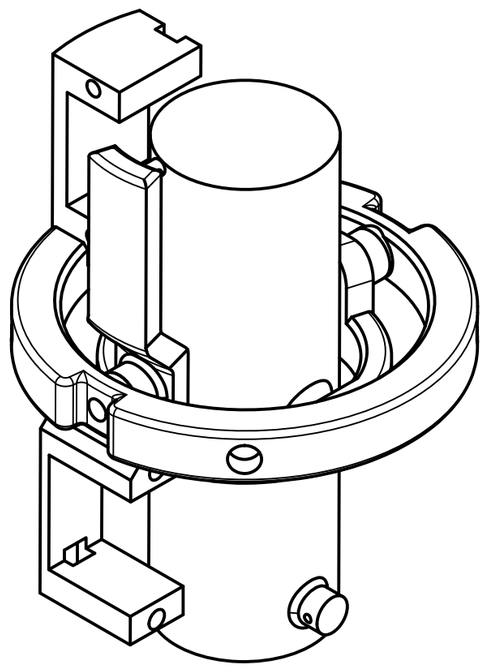

ALL DIMENSIONS IN mm

Dept.	Technical reference	Created by	Approved by
		Kenan Kao 2025-08-18	
		Document type	Document status
		Title: Motor Mount	DWG No.: TVC-001
			Rev.: B · Date of issue: 2025-08-18 · Sheet: 1/1