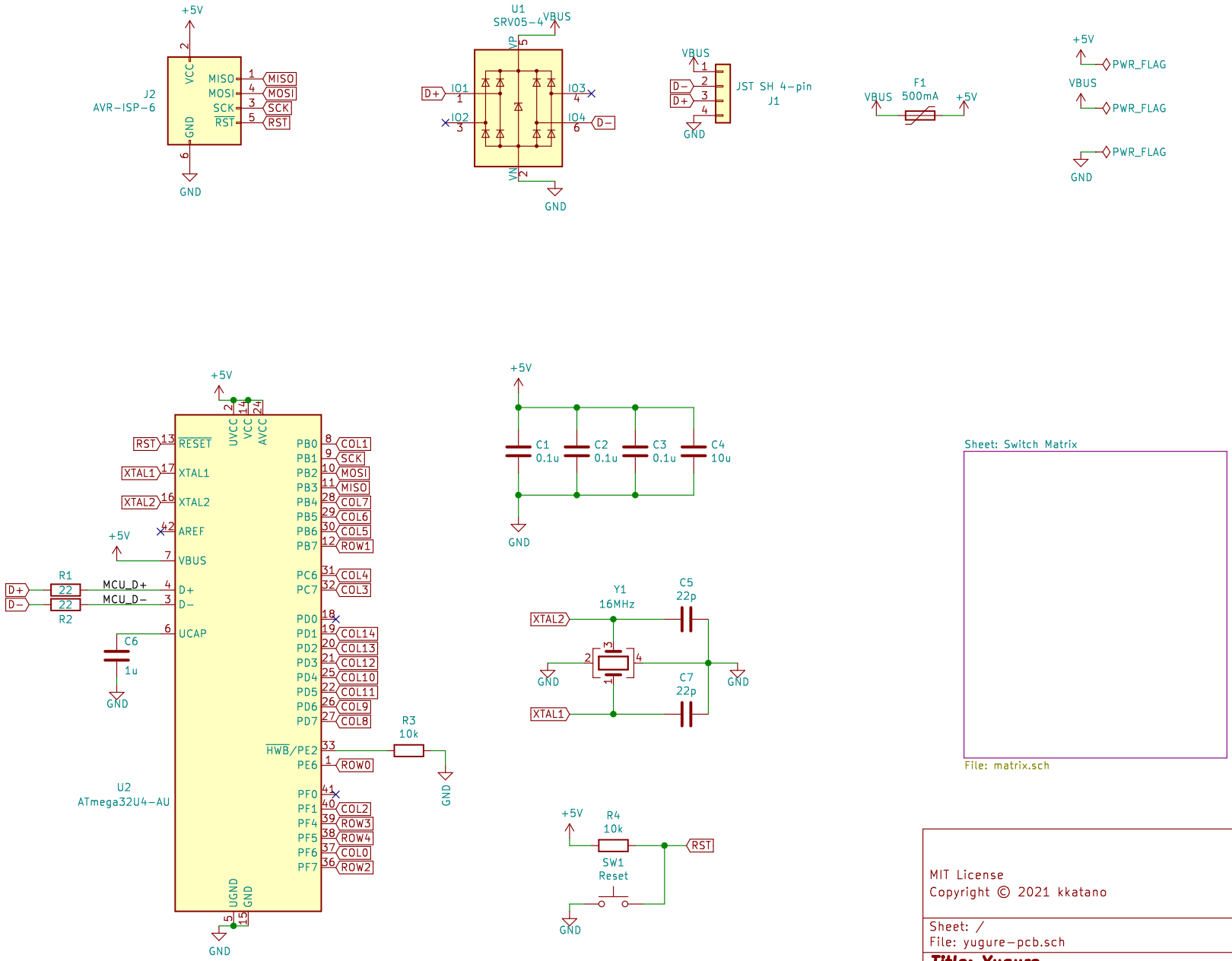

MIT License
Copyright © 2021 kkatano

Sheet: /
File: yugure-pcb.sch

Title: Yugure

Size: A4	Date: 2021-07-04	Rev: 1
KiCad E.D.A. eeschema (5.1.4)-1		Id: 1/2

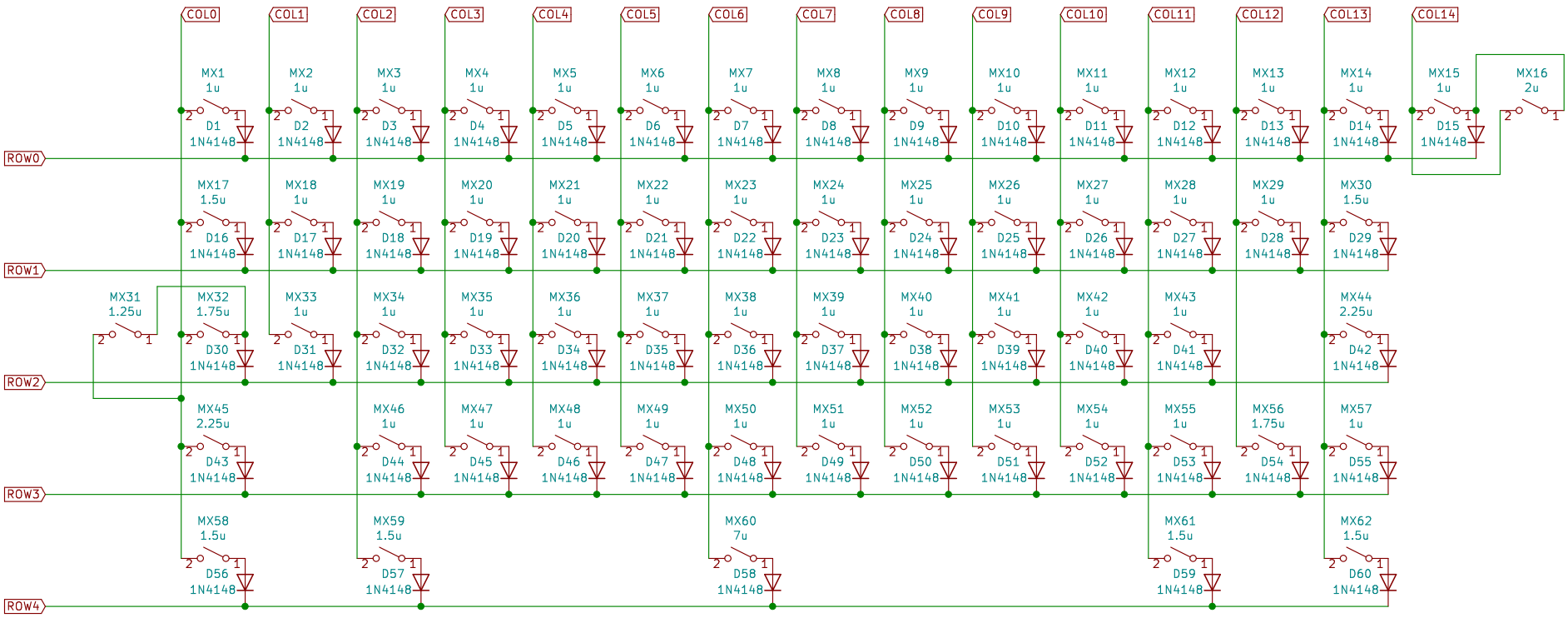

MIT License
Copyright © 2021 kkatano

Sheet: /Switch Matrix/
File: matrix.sch

Title: Yugure

Size: A4	Date: 2021-07-04	**Rev: 1**
KiCad E.D.A. eeschema (5.1.4)-1		Id: 2/2