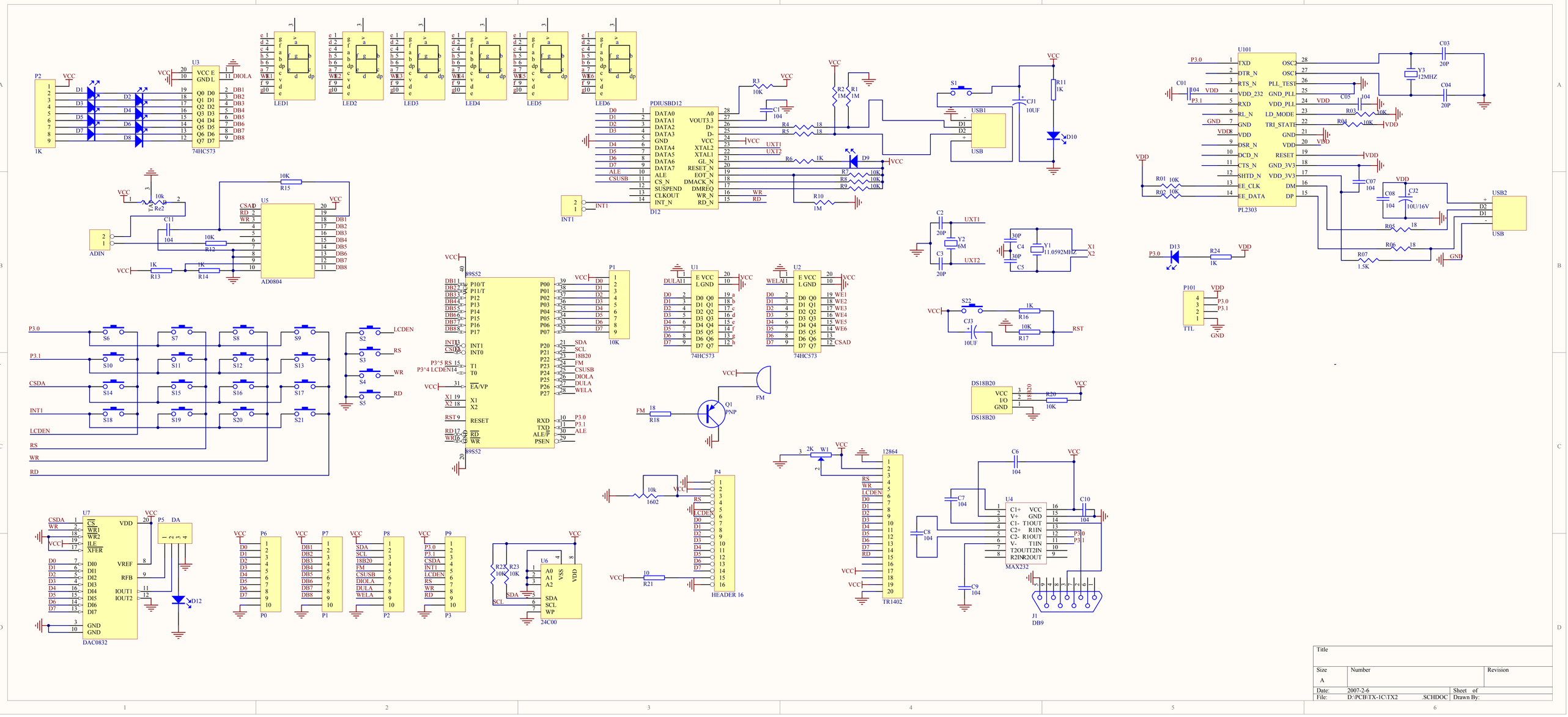

Title		
Size A	Number	Revision
Date: 2007-2-6		Sheet of
File: D:\PCB\TX-1C\TX2 .SCHDOC		Drawn By:

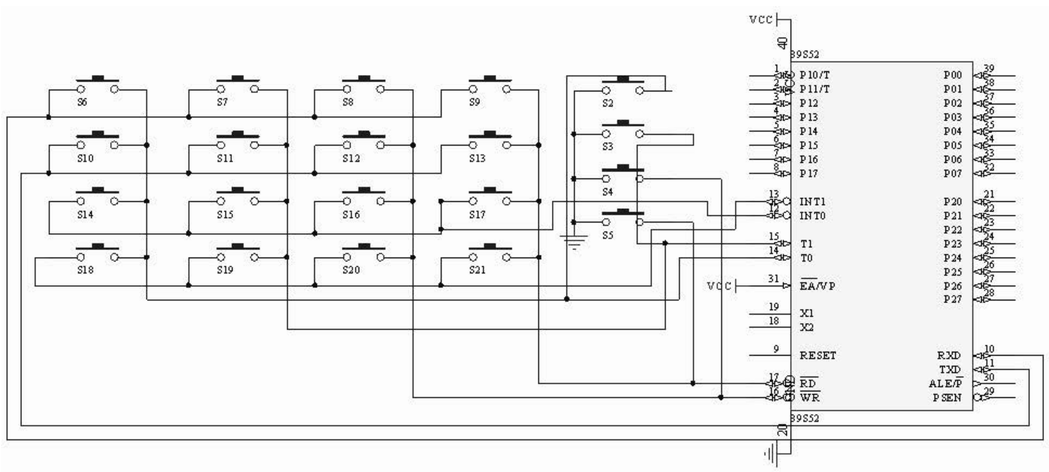

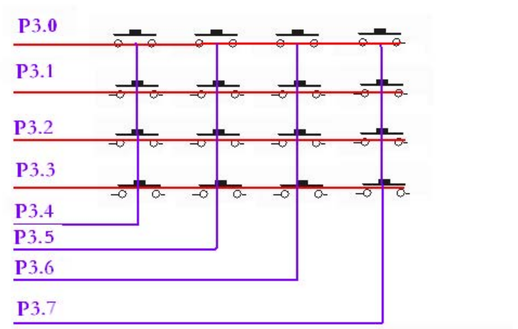

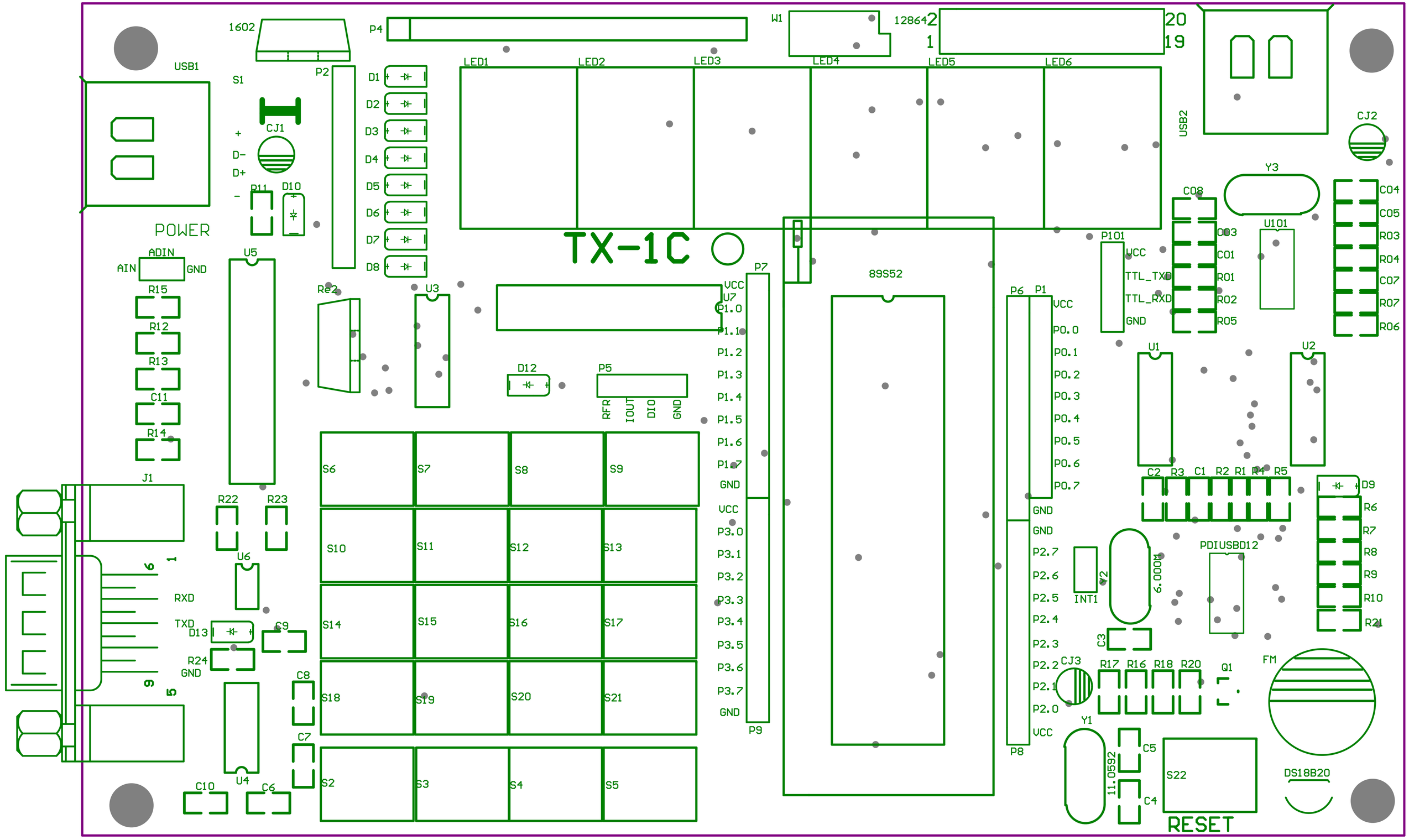
TX-1C
POWER
USB1
USB2
1602
12864
20
19
2
1
W1
P4
P2
S1
CJ1
D+
D-
+
-
P11
D10
D1
D2
D3
D4
D5
D6
D7
D8
LED1
LED2
LED3
LED4
LED5
LED6
CJ2
Y3
C08
C03
C01
R01
R02
R05
C04
C05
R03
R04
C07
R07
R06
U101
P101
VCC
TTL_TXD
TTL_RXD
GND
ADIN
AIN
GND
R15
R12
R13
C11
R14
U5
R22
R23
U6
RXD
TXD
D13
C9
R24
GND
C8
C7
C10
U4
C6
J1
6
1
9
5
R22
R23
U3
D12
P5
RFR
IOUT
DIO
GND
S6
S7
S8
S9
S10
S11
S12
S13
S14
S15
S16
S17
S18
S19
S20
S21
S2
S3
S4
S5
VCC
U7
P1.0
P1.1
P1.2
P1.3
P1.4
P1.5
P1.6
P1.7
GND
VCC
P3.0
P3.1
P3.2
P3.3
P3.4
P3.5
P3.6
P3.7
GND
P7
P9
89S52
P6
P1
VCC
P0.0
P0.1
P0.2
P0.3
P0.4
P0.5
P0.6
P0.7
GND
GND
P2.7
P2.6
P2.5
P2.4
P2.3
P2.2
P2.1
P2.0
VCC
P8
U1
U2
C2
R3
C1
R2
R1
R4
R5
D9
R6
R7
R8
R9
R10
R21
PDIUSBD12
INT1
V2
6.000M
C3
CJ3
R17
R16
R18
R20
Q1
FM
Y1
11.0592
C5
C4
S22
RESET
DS18B20