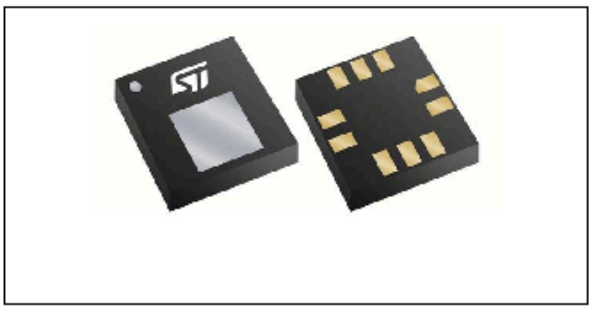

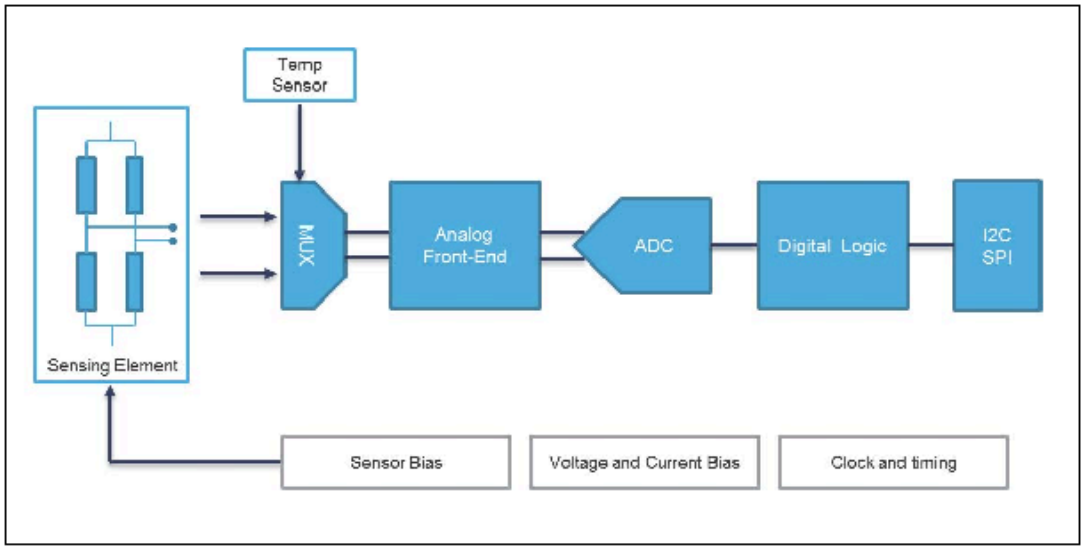
Temp
Sensor
Sensing Element
MUX
Analog
Front-End
ADC
Digital Logic
I2C
SPI
Sensor Bias
Voltage and Current Bias
Clock and timing

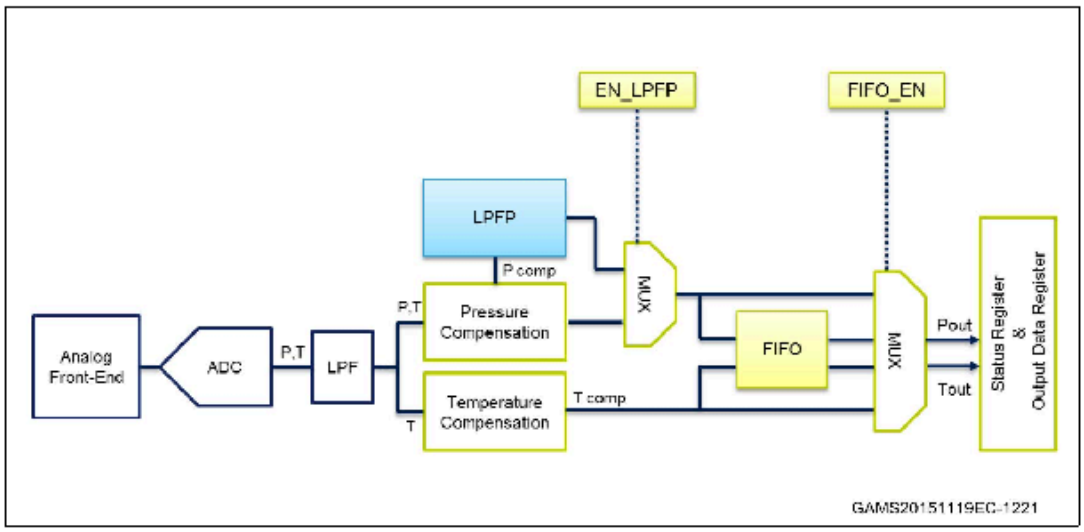
EN_LPFP
FIFO_EN
LPFP
P comp
Analog
Front-End
ADC
P,T
LPF
P,T
Pressure
Compensation
T
Temperature
Compensation
T comp
MUX
FIFO
MUX
Pout
Tout
Status Register
&
Output Data Register
GAMS20151119EC-1221

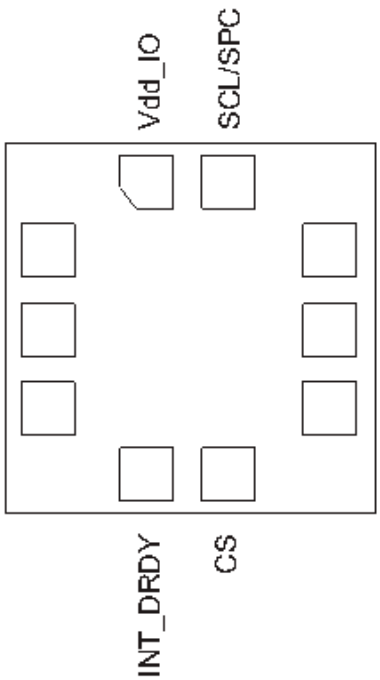
INT_DRDY
Vdd_IO
CS
SCL/SPC

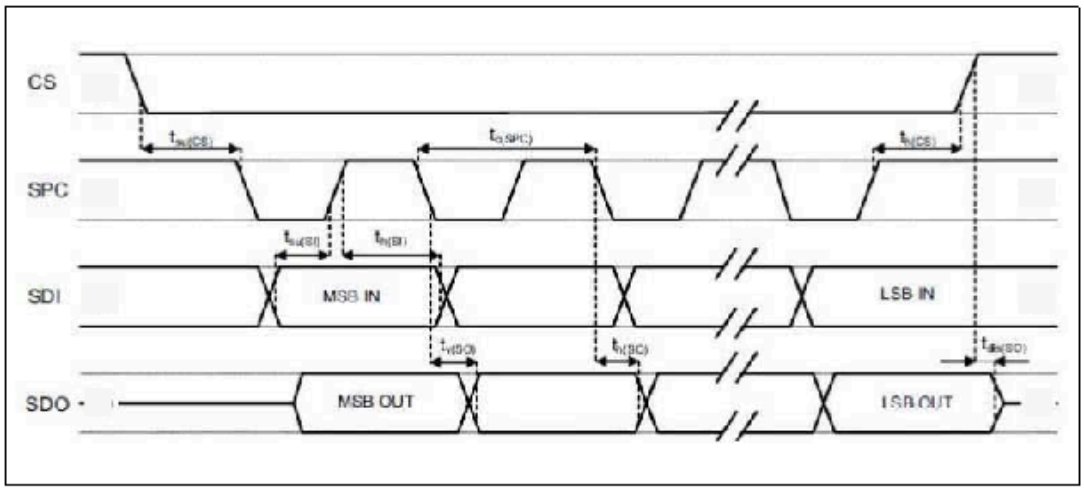
CS
SPC
SDI
SDO
MSB IN
LSB IN
MSB OUT
LSB OUT

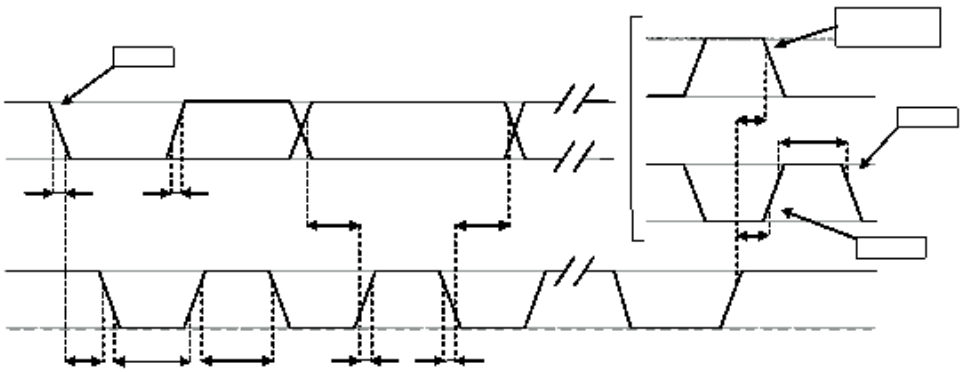

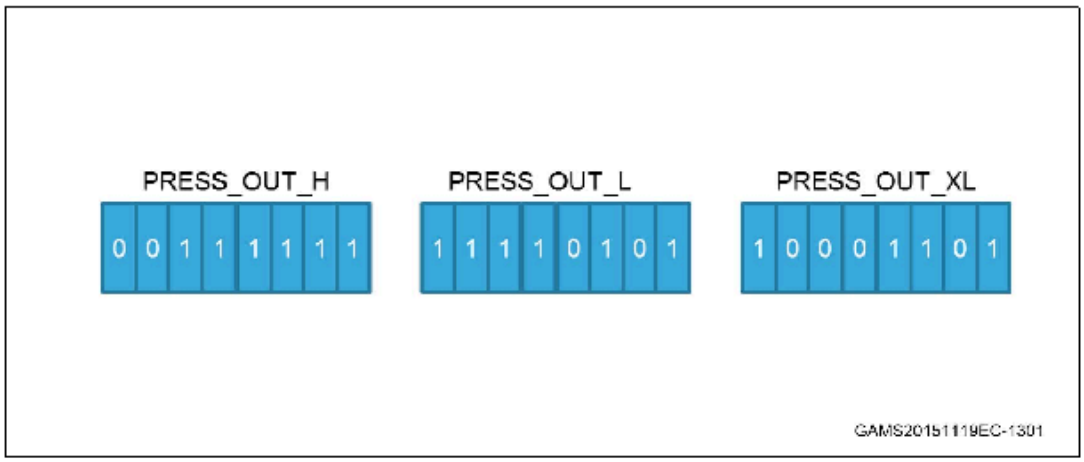

Pressure Value (LSB) = PRESS_OUT_H (2Ah) & PRESS_OUT_L (29h) & PRESS_OUT_XL (28h)
= 3FF58Dh = 4191629 LSB (decimal signed)

$$\text{Pressure (hPa)} = \frac{\text{Pressure Value (LSB)}}{\text{Scaling Factor}} = \frac{4191629\ \text{LSB}}{4096\ \text{LSB/hPa}} = 1023.3\text{hPa}$$

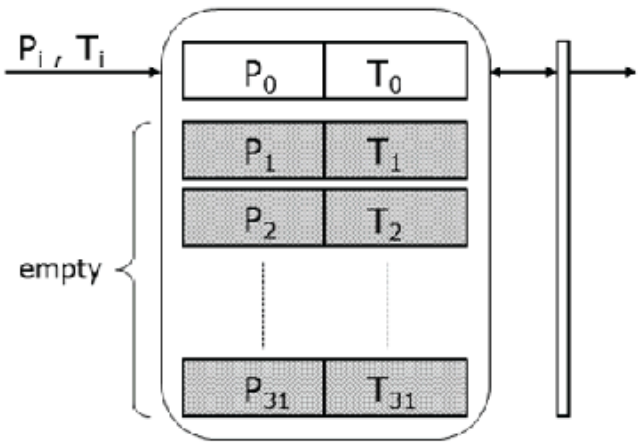

GAMS20151122EC-1404

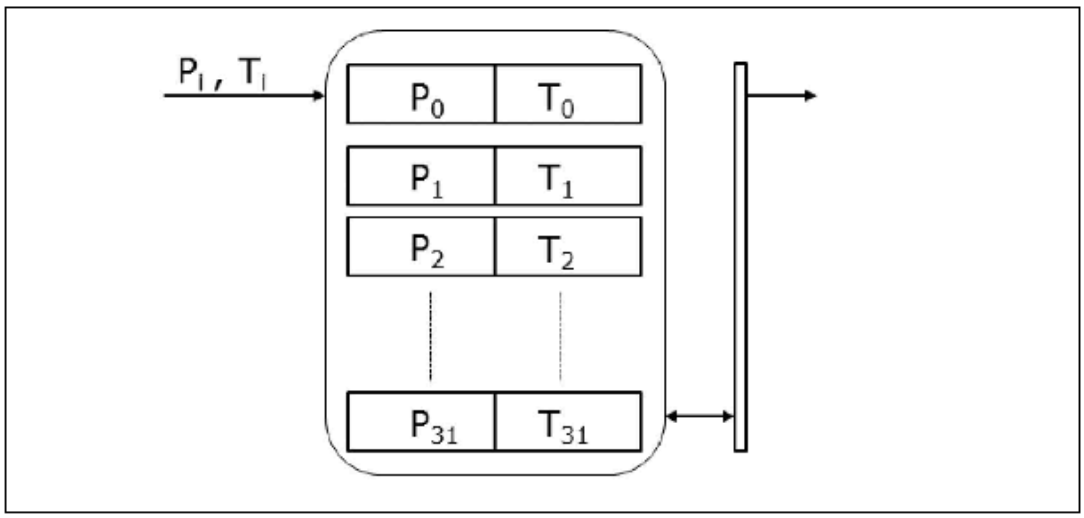
P_I , T_I
P_0
T_0
P_1
T_1
P_2
T_2
P_{31}
T_{31}

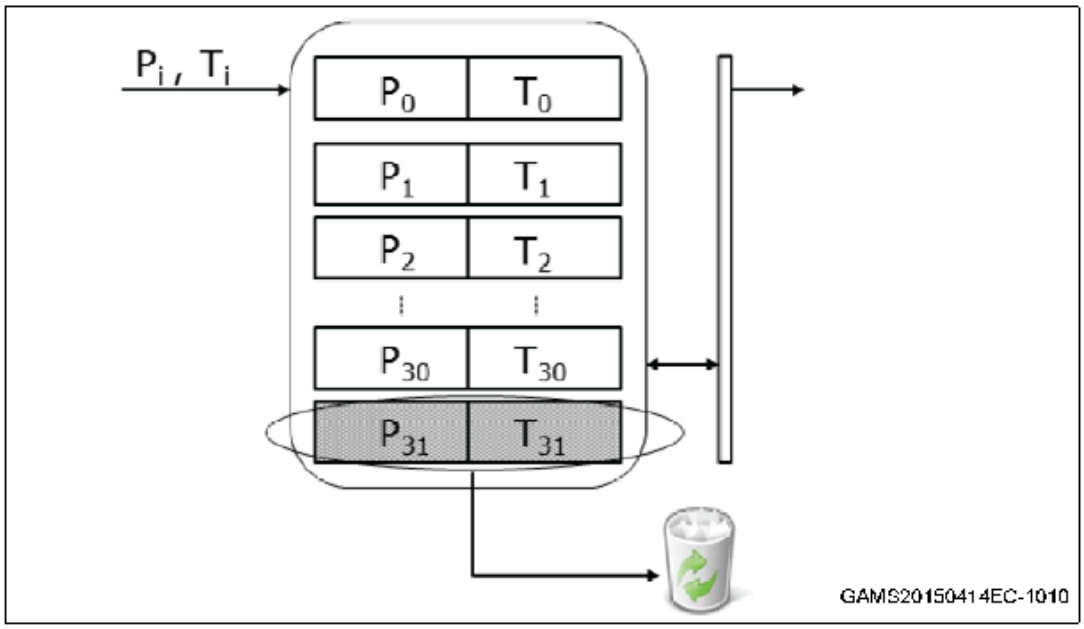
Pi , Ti
P0
T0
P1
T1
P2
T2
P30
T30
P31
T31
GAMS20150414EC-1010

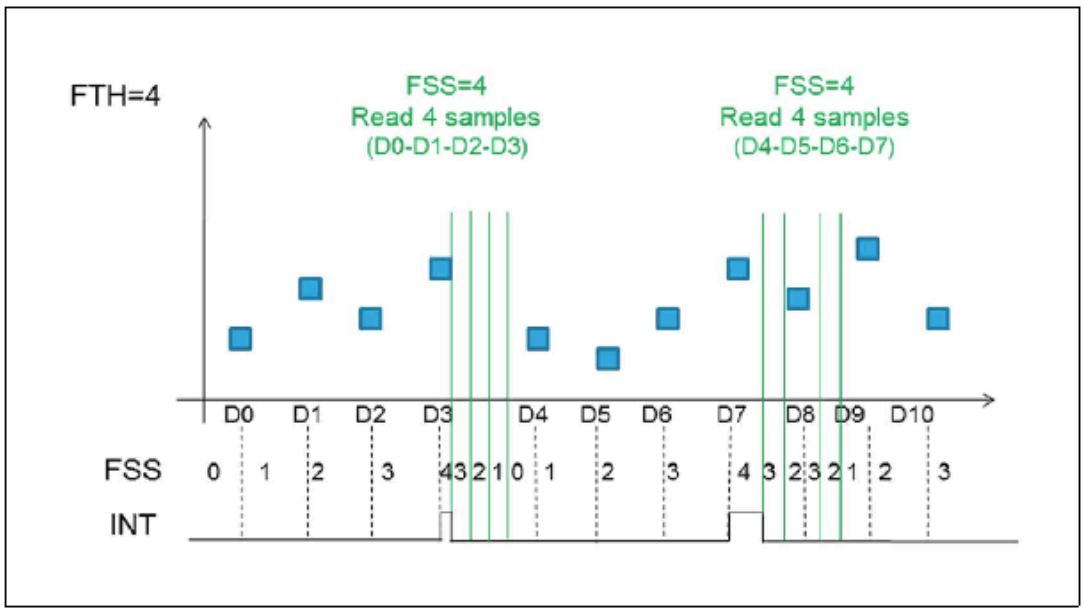
FTH=4
FSS=4
Read 4 samples
(D0-D1-D2-D3)
FSS=4
Read 4 samples
(D4-D5-D6-D7)
D0
D1
D2
D3
D4
D5
D6
D7
D8
D9
D10
FSS
0 1 2 3 4 3 2 1 0 1 2 3 4 3 2 3 2 1 2 3
INT

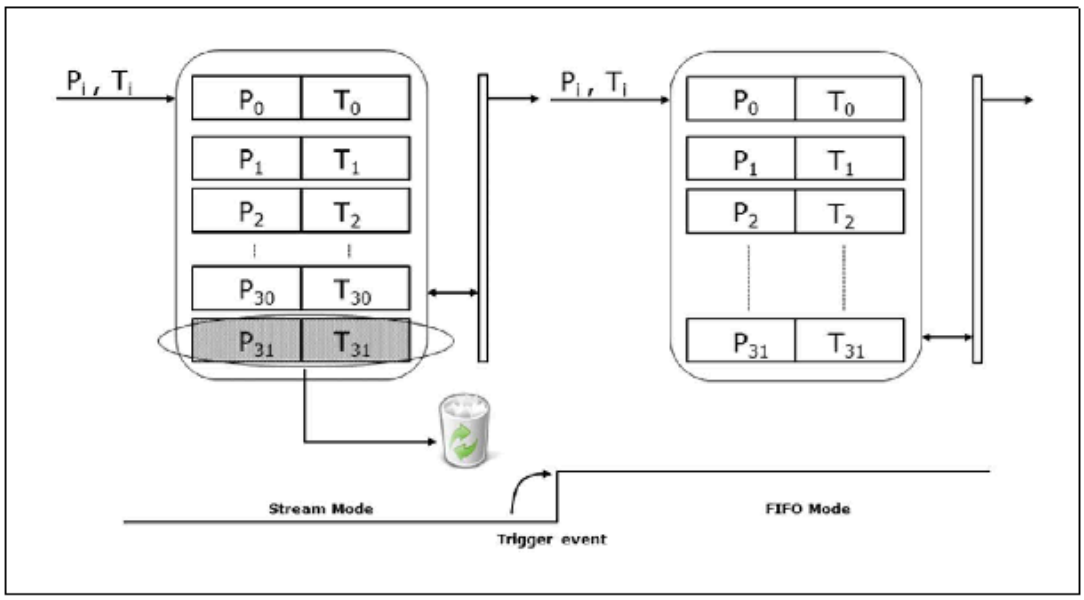
Pi , Ti
P0
T0
P1
T1
P2
T2
P30
T30
P31
T31
Pi , Ti
P0
T0
P1
T1
P2
T2
P31
T31
Stream Mode
Trigger event
FIFO Mode

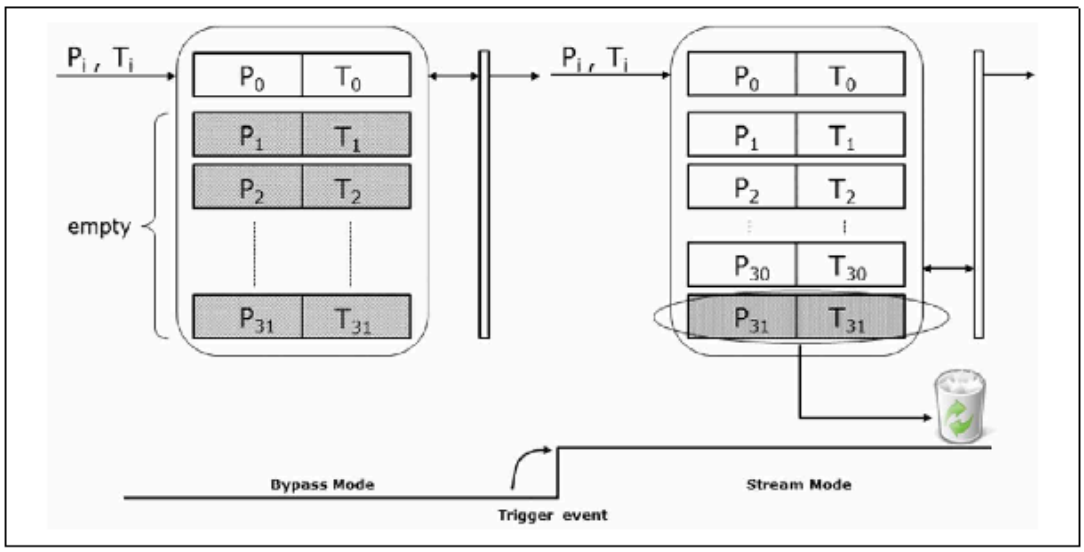
Pi , Ti
P0
T0
P1
T1
P2
T2
empty
P31
T31
Pi , Ti
P0
T0
P1
T1
P2
T2
P30
T30
P31
T31
Bypass Mode
Trigger event
Stream Mode

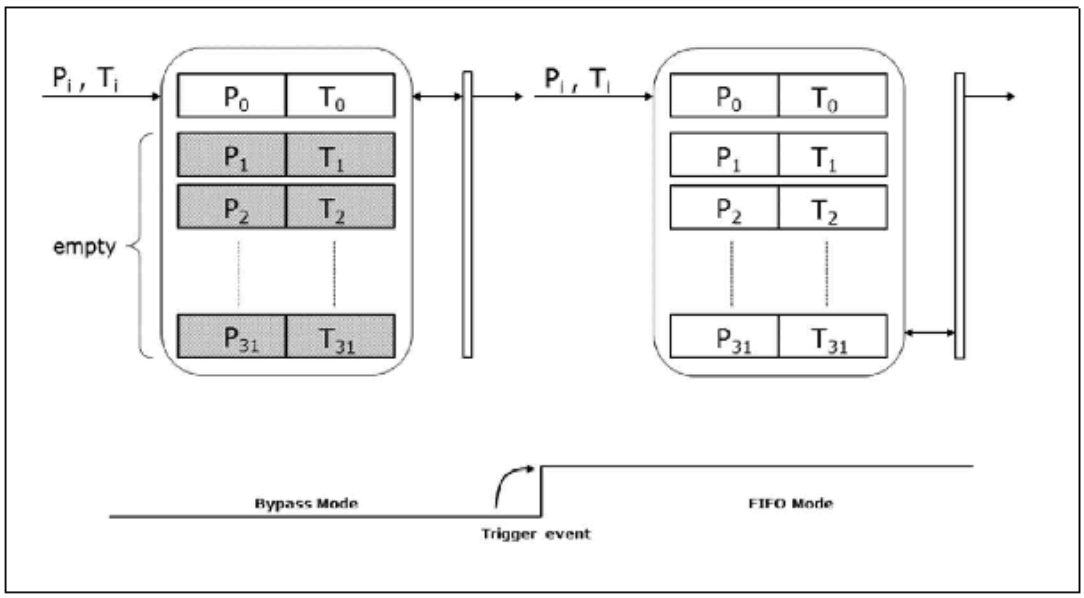
Pi , Ti
P0
T0
P1
T1
P2
T2
P31
T31
empty
Pi , Ti
P0
T0
P1
T1
P2
T2
P31
T31
Bypass Mode
Trigger event
FIFO Mode

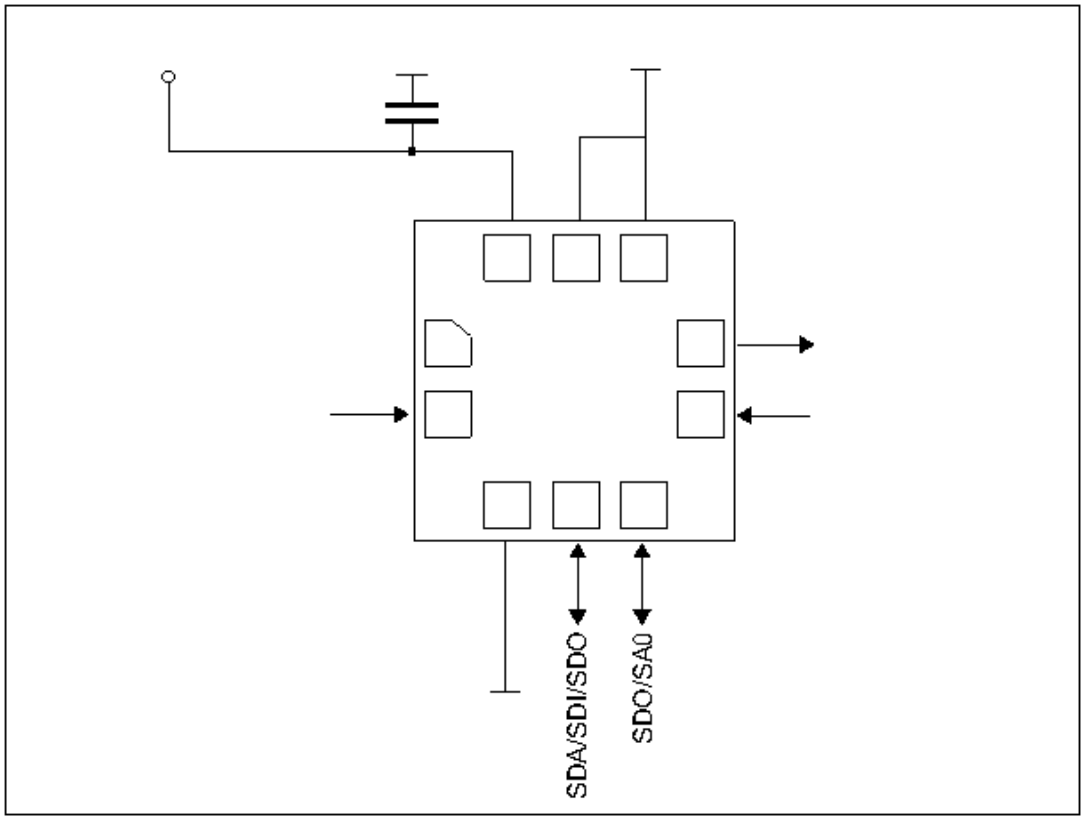
SDA/SDI/SDO
SDO/SA0

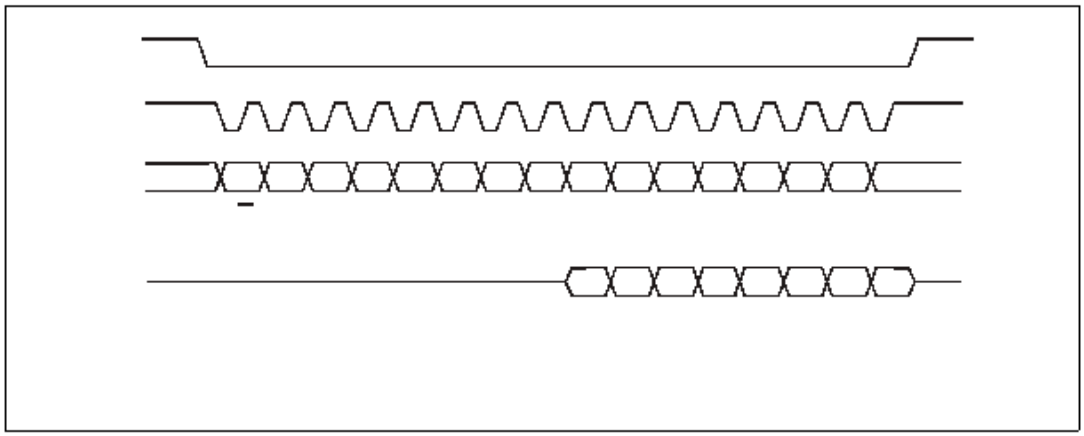

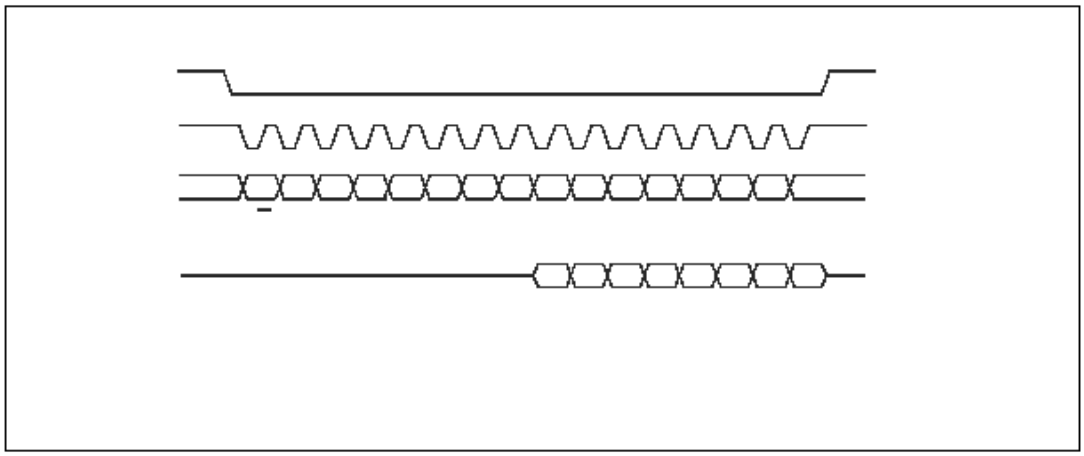

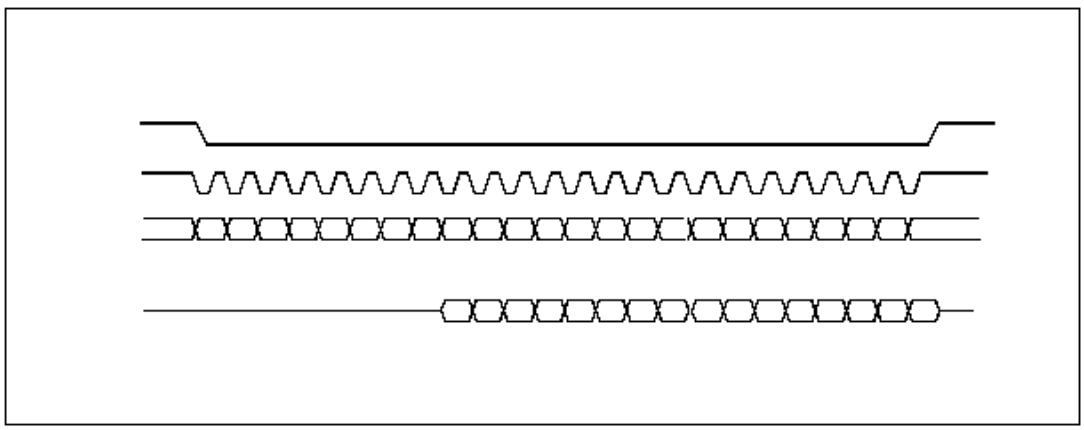

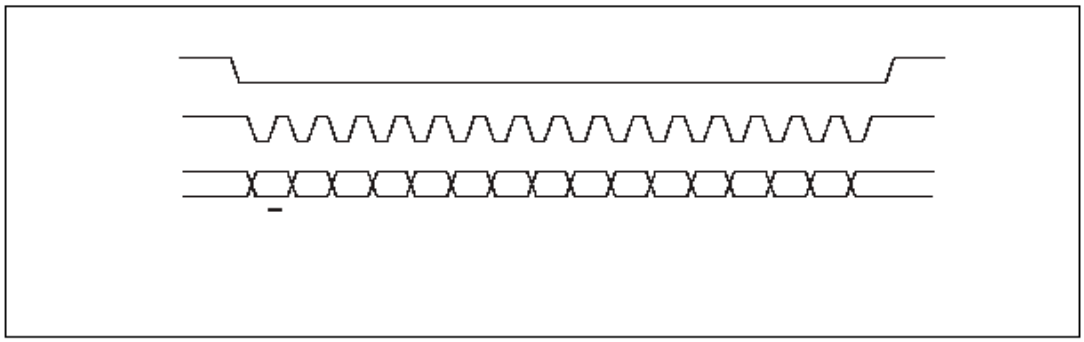

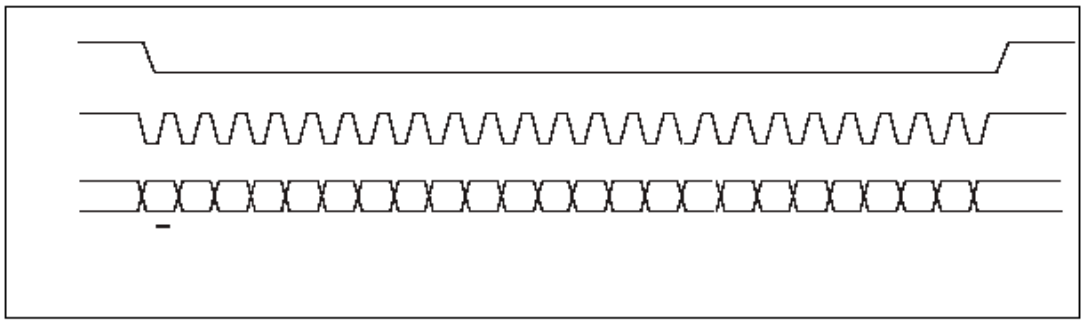

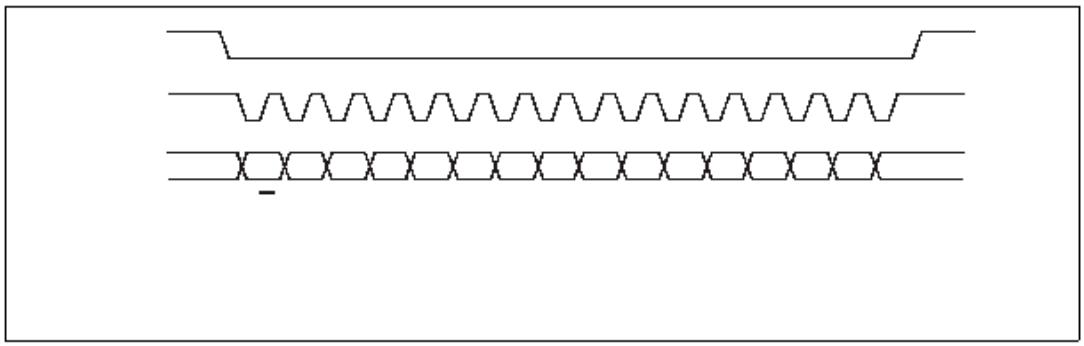

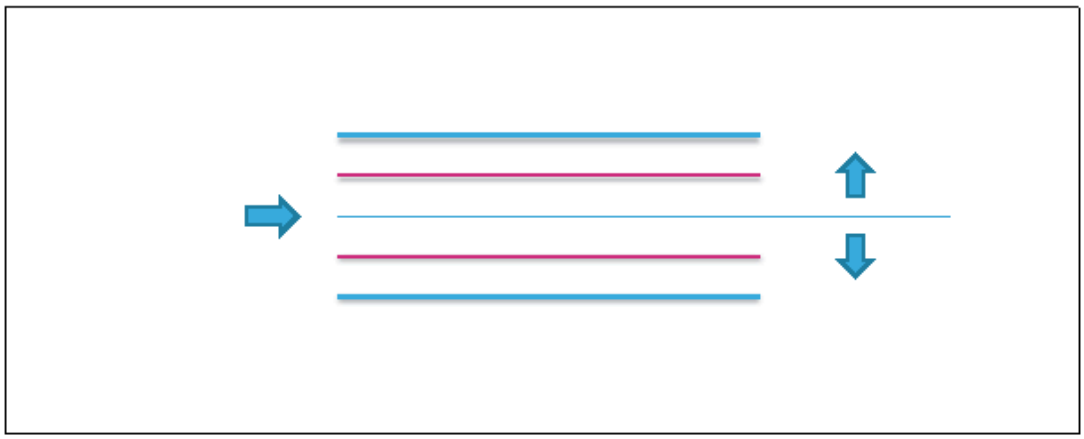

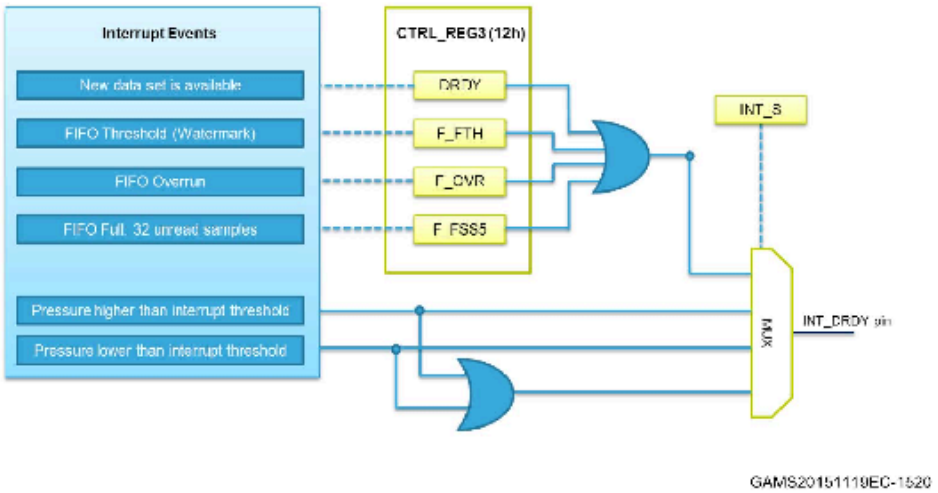
Interrupt Events
New data set is available
FIFO Threshold (Watermark)
FIFO Overrun
FIFO Full, 32 unread samples
Pressure higher than interrupt threshold
Pressure lower than interrupt threshold
CTRL_REG3 (12h)
DRDY
F_FTH
F_OVR
F_FSS5
INT_S
MUX
INT_DRDY pin
GAMS20151119EC-1520

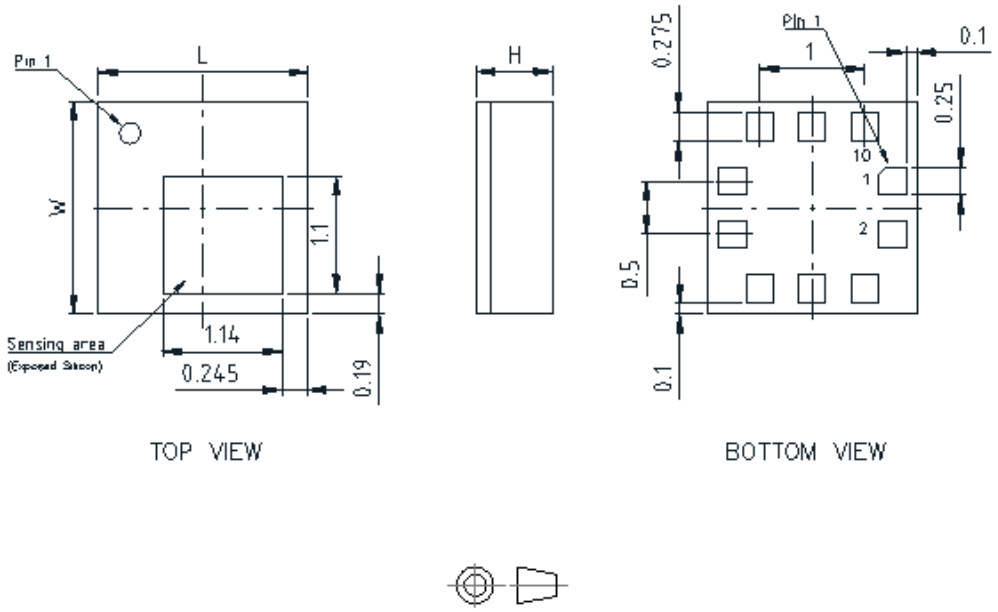
Pin 1
L
W
1.1
1.14
0.245
0.19
Sensing area
(Exposed Silicon)
H
0.275
Pin 1
1
0.1
0.25
10
1
2
0.5
0.1
TOP VIEW
BOTTOM VIEW