TSDP.9.2 UBD

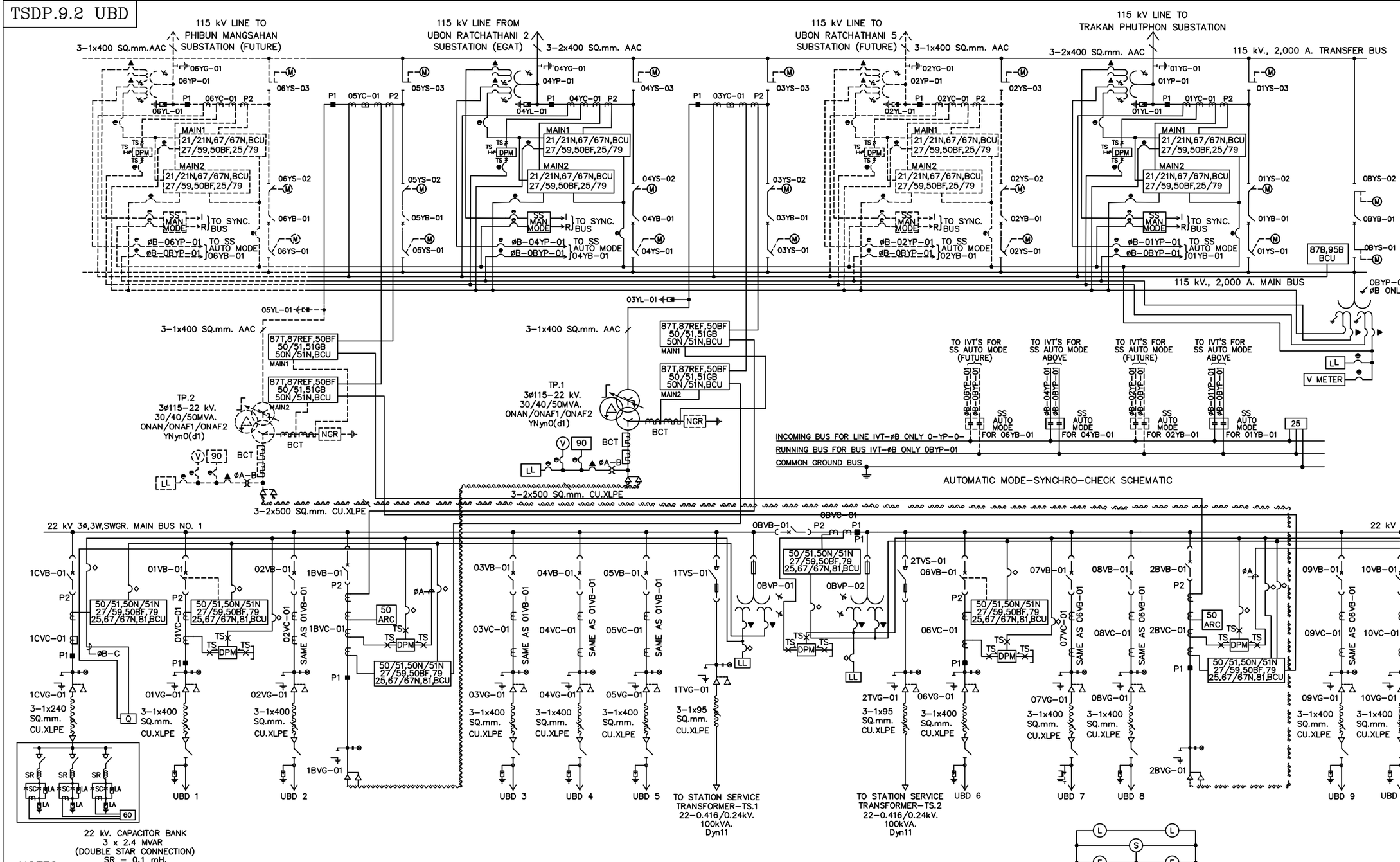

DEVICES	EXPLANATION
21, 21N	DISTANCE TIME-STEP PHASE AND GROUND DISTANCE RELAY
67	DIRECTIONAL PHASE OVERCURRENT RELAY
67N	DIRECTIONAL GROUND OVERCURRENT RELAY
25	SYNCHROCHECK RELAY
79	AUTOMATIC RECLOSING RELAY
50 BF	BREAKER FAILURE RELAY
50/51	NON-DIRECTIONAL INSTANTANEOUS AND TIME PHASE OVERCURRENT RELAY
50N/51N	NON-DIRECTIONAL INSTANTANEOUS AND TIME GROUND OVERCURRENT RELAY
51GB	NON-DIRECTIONAL GROUND BACKUP OVERCURRENT RELAY
87T	TRANSFORMER DIFFERENTIAL RELAY
87REF	TRANSFORMER RESTRICTED EARTH FAULT RELAY THIS RELAY SHALL BE INCORPORATED IN THE TRANSFORMER DIFFERENTIAL RELAY (87T)
87B	BUS DIFFERENTIAL RELAY, HIGH IMPEDANCE TYPE
95B	BUSBAR SUPERVISION RELAY FOR BUS WIRE SUPERVISION FOR 87B
27,59	UNDER/OVER VOLTAGE RELAY
90	AUTOMATIC VOLTAGE REGULATOR
50 ARC	ARC DETECTOR RELAY FOR ARC PROTECTION SYSTEM
81	UNDER FREQUENCY RELAY
60	CAPACITOR CURRENT UNBALANCE SENSING RELAY
Q	POWER FACTOR CONTROLLER
DPM	DIGITAL POWER METER
DIM	DISTRIBUTED I/O MODULE (PROVIDED IN CSCS)
V METER	DIGITAL VOLTMETER
SS	SYNCHRONIZING SWITCH,3-POSITION,AUTO-OFF-MAN
L	SYNCHRONIZING LAMP
V	VOLTMETER
F	FREQUENCY METER
S	SYNCHROSCOPE
LL	LINE INDICATING LAMP
TS	CURRENT TEST SWITCH
TS	POTENTIAL TEST SWITCH
▲	LOCATED IN THE SWITCHYARD JUNCTION BOX
◓	LOCATED IN THE CONTROL AND RELAY BOARD
▼	LOCATED IN THE 22 kV SWITCHGEAR JUNCTION BOX
◇	FOR 22 kV SWITCHGEAR CONTROL & PROTECTIVE CIRCUITS
	WYE CONNECTED CT OF SECONDARY WINDING
	DELTA CONNECTED CT OF SECONDARY WINDING (IF ANY)
	TRANSFORMER BUSHING CT OF SECONDARY WINDING, WYE CONNECTED FOR PHASE OR NEUTRAL
BCU	BAY CONTROL UNIT

NOTES

1. 115 kV. IVT RATIO

$\frac{115,000}{\sqrt{3}} : \frac{115}{\sqrt{3}} / 115 \;//\; \frac{115}{\sqrt{3}} / 115$ V — 50VA/0.2/1.5VF , 50VA/3P/1.5VF (SIMULTANEOUS BURDEN = 100 VA.)

2. 115 kV. CT RATIO

1800/1500/1200/900/600/300 : 1/1/1/1 A.	– FOR LINE BAY	20VA/5P20 , 20VA/0.5FS5 , 20VA/5P20 , 20VA/5P20
1800/1500/1200/900/600/300 : 1 A.	– FOR TRANSFORMER BAY (CORE1)	20VA/5P20
400/300/200 : 1/1/1 A.	– FOR TRANSFORMER BAY (CORE2-4)	20VA/0.5FS5 , 30VA/5P20 , 30VA/5P20
	***PARTICULAR REQUIREMENT FOR ALL 5P20 CLASS CT's. CURRENT RATIO ERROR AT 100% OF RATED CURRENT < 0.5%	
500/200/100 : 1 A.	– FOR HIGH SIDE TRANSFORMER BUSHING CT.	20VA/5P20

3. 22 kV. VT. RATIO

$\frac{22000}{\sqrt{3}} : \frac{110}{\sqrt{3}} // \frac{110}{\sqrt{3}}$ V — 50VA/0.5/1.9VF , 50VA/3P/1.9VF

4. 22 kV. CT. RATIO

1800/1500/900 : 1/1/1/1 A	– FOR INCOMING BREAKER	20VA/5P20 , 20VA/0.5FS5 , 20VA/5P20 , 20VA/5P20
1800/1500/900 : 1/1 A	– FOR TIE BREAKER	20VA/0.5FS5 , 20VA/5P20
600/300 : 1/1 A	– FOR OUTGOING 22 kV.	20VA/0.5FS5 , 20VA/5P20
1800/900 : 1/1 A	– FOR LOW SIDE TRANSFORMER BUSHING CT.	20VA/5P20 , 20VA/0.5FS5
1800/900 : 1/1 A	– FOR NEUTRAL BUSHING CT.	20VA/5P20 , 20VA/5P20
600/300 : 1/1 A	– FOR CAPACITOR BANK	20VA/0.5FS5 , 20VA/5P20
	***PARTICULAR REQUIREMENT FOR ALL 5P20 CLASS CT's. CURRENT RATIO ERROR AT 100% OF RATED CURRENT < 0.5%	

5. THE NEUTRAL GROUNDING RESISTORS (NGR) ARE INDICATED FOR FUTURE INSTALLATION.
6. SYNCHRONIZING SCHEMATIC
   6.1 0-YP-01 SHOWN THUS, REFER TO INCOMING IVT DESIGNATIONS.
   6.2 0BYP-01 SHOWN THUS REFERS TO RUNNING BUS IVT
   6.3 ØB ONLY ⊻ SHOWN THUS, REFERS TO THE SECONDARY WINDING OF IVT FOR PHASE"B" AND USING FULL TAP WINDING 115V FOR SYNCHRONIZING SYSTEM WITH ONE END OF THE WINDING CONNECTED WITH COMMON GROUND BUS.
   6.4 MANUAL SYNCHRONIZING BY SYNCHROSCOPE SHALL UTILIZE INCOMING AND RUNNING SECONDARY VOLTAGES OF METERING CORES FROM"PHASE B" FOR BOTH IVT"S.
   6.5 AUTOMATIC SYCHRONISM VERIFICATION BY SYNCHRO CHECK RELAY (25) SHALL UTILIZE INCOMING AND RUNNING SECONDARY VOLTAGES OF RELAYING CORES FROM"PHASE B" FOR BOTH IVT"S.
7. EACH DIGITAL POWER METER (DPM) SHALL BE COMMUNICATED WITH AUTOMATIC METER READING (AMR) APPLICATION SERVER VIA SWITCH NETWORK.
8. FOR 115KV RELAYS SHALL BE DOUBLE MAIN PROTECTION RELAY(MAIN1&2) AND DIFFERENT PRODUCT/MANUFACTURER.
9. THE DEDICATED PROTECTION RELAY FOR 22 KV SWITCHGEAR SHALL BE STANDARDIZED WHICH CAN BE EITHER USED FOR INCOMING, BUS SECTION, OUTGOING FEEDERS OR CAPACITOR BANK FEEDERS.
10. NETWORK TOPOLOGY OF SUBSTATION CONTROL AND PROTECTION SYSTEM IS TOPOLOGY 1

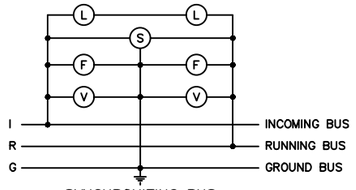

SYNCHRONIZING BUS

REFERENCE DRAWING

SINGLE LINE DIAGRAM.....DWG NO. FA2-011/63031

UBD-M

กองออกแบบสถานีไฟฟ้า ฝ่ายงานสถานีไฟฟ้า	การไฟฟ้าส่วนภูมิภาค	ใช้แทนแบบ —
ผู้เขียน ภราดร	ผู้ว่าการ (แทน)	ถูกแทนโดยแบบ —
ผู้สำรวจ —		เขียนเสร็จวันที่ 23 ก.ค. 63
วิศวกร ภราดร	สถานีไฟฟ้าอุบลราชธานี 4 จ.อุบลราชธานี	แก้แบบวันที่ —
หัวหน้าแผนก วรเวช	มิเตอร์ และ รีเลย์ไดอะแกรม	มิติเป็น —
ผู้อำนวยการกอง		มาตราส่วน —
ผู้อำนวยการฝ่าย (แทน)	UBON RATCHATHANI 4 SUBSTATION	แบบเลขที่ FA4-011/63065
รองผู้ว่าการวิศวกรรม	METERING AND RELAYING DIAGRAM	แผ่นที่ 1 ของจำนวน 1 แผ่น