TDDP.2 NEA (ADD)

NOTES

1. 115 kV IVT RATIO $\frac{115,000}{\sqrt{3}} : \frac{115}{\sqrt{3}} / 115 \;//\; \frac{115}{\sqrt{3}} / 115$ V (01YP–01) — 50VA/0.2/1.5VF , 50VA/3P/1.5VF (SIMULTANEOUS BURDEN = 100 VA)
2. 115 kV CT RATIO : 1800/1500/1200/900/600/300 : 1/1/1/1 A – FOR LINE BAY (01YC–01) — 20VA/5P20 , 20VA/0.5FS5 , 20VA/5P20 , 20VA/5P20
3. 115 kV CT RATIO : 1800/1500/1200/900/600/300 : 1 A – FOR TRANSFORMER BAY (CORE 1) — 20VA/5P20
   400/300/200 : 1/1/1 A – FOR TRANSFORMER BAY (CORE 2–4) — 20VA/0.5FS5 , 30VA/5P20 , 30VA/5P20
   500/200/100 : 1 A – FOR HIGH SIDE TRANSFORMER BUSHING CT — 20VA/5P20
4. 22 kV VT RATIO $\frac{22,000}{\sqrt{3}} : \frac{110}{\sqrt{3}} // \frac{110}{\sqrt{3}}$ V — 50VA/0.5/1.9VF , 50VA/3P/1.9VF
5. 22 kV CT RATIO
   - 1800/1500/900 : 1/1/1/1 A – FOR INCOMING BREAKER — 20VA/5P20 , 20VA/0.5FS5 , 20VA/5P20 , 20VA/5P20
   - 1800/1500/900 : 1/1 A – FOR TIE BREAKER — 20VA/0.5FS5 , 20VA/5P20
   - 1800/900 : 1/1 A – FOR LOW SIDE TRANSFORMER BUSHING CT — 20VA/5P20 , 20VA/0.5FS5
   - 1800/900 : 1/1 A – FOR NEUTRAL TRANSFORMER BUSHING CT — 20VA/5P20 , 20VA/5P20
   - 600/300 : 1/1 A – FOR OUTGOING 22 kV — 20VA/0.5FS5 , 20VA/5P20
   - 600/300 : 1/1 A – FOR CAPACITOR BANK — 20VA/0.5FS5 , 20VA/5P20
6. THE NEUTRAL GROUNDING RESISTORS (NGR) ARE INDICATED FOR FUTURE INSTALLATION.
7. SYNCHRONZING SCHEMATIC
   - 7.1 0–YP–01 SHOWN THUS, REFER TO INCOMING IVT DESIGNATIONS.
   - 7.2 OBYP–01 SHOWN THUS REFERS TO RUNNING BUS IVT
   - 7.3 øB ONLY ✓ SHOWN THUS, REFERS TO THE SECONDARY WINDING OF IVT FOR PHASE"B" AND USING FULL TAP WINDING 115V FOR SYNCHRONIZING SYSTEM WITH ONE END OF THE WINDING CONNECTED WITH COMMON GROUND BUS.
   - 7.4 MANUAL SYNCHRONIZING BY SYNCHROSCOPE SHALL UTILIZE INCOMING AND RUNNING SECONDARY VOLTAGES OF METERING CORES FROM"PHASE B" FOR BOTH IVT"S.
   - 7.5 AUTOMATIC SYCHRONISM VERIFICATION BY SYNCHRO CHECK RELAY (25) SHALL UTILIZE INCOMING AND RUNNING SECONDARY VOLTAGES OF RELAYING CORES FROM"PHASE B" FOR BOTH IVT"S.

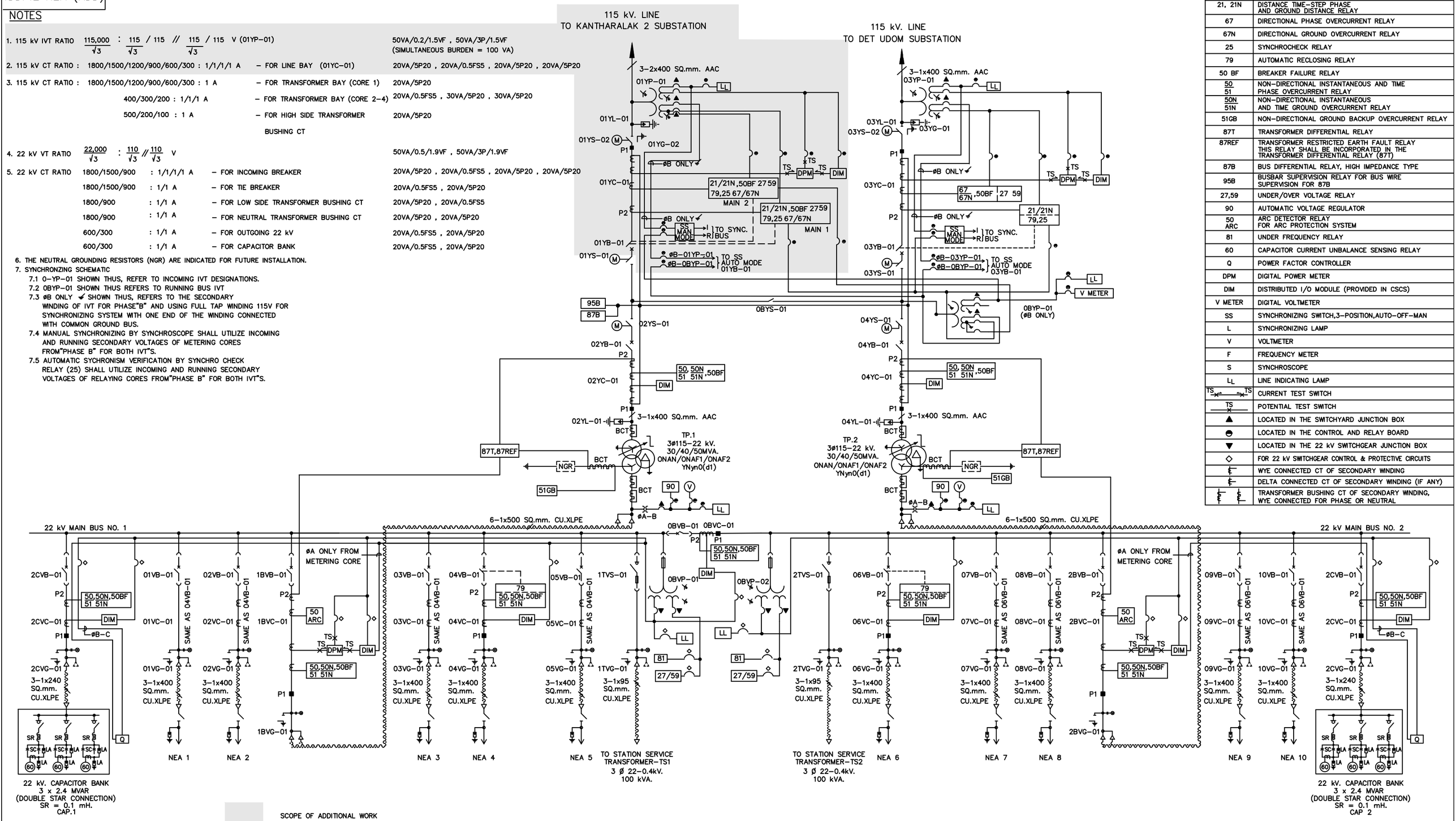

DEVICES	EXPLANATION
21, 21N	DISTANCE TIME–STEP PHASE AND GROUND DISTANCE RELAY
67	DIRECTIONAL PHASE OVERCURRENT RELAY
67N	DIRECTIONAL GROUND OVERCURRENT RELAY
25	SYNCHROCHECK RELAY
79	AUTOMATIC RECLOSING RELAY
50 BF	BREAKER FAILURE RELAY
50 / 51	NON–DIRECTIONAL INSTANTANEOUS AND TIME PHASE OVERCURRENT RELAY
50N / 51N	NON–DIRECTIONAL INSTANTANEOUS AND TIME GROUND OVERCURRENT RELAY
51GB	NON–DIRECTIONAL GROUND BACKUP OVERCURRENT RELAY
87T	TRANSFORMER DIFFERENTIAL RELAY
87REF	TRANSFORMER RESTRICTED EARTH FAULT RELAY THIS RELAY SHALL BE INCORPORATED IN THE TRANSFORMER DIFFERENTIAL RELAY (87T)
87B	BUS DIFFERENTIAL RELAY, HIGH IMPEDANCE TYPE
95B	BUSBAR SUPERVISION RELAY FOR BUS WIRE SUPERVISION FOR 87B
27,59	UNDER/OVER VOLTAGE RELAY
90	AUTOMATIC VOLTAGE REGULATOR
50 ARC	ARC DETECTOR RELAY FOR ARC PROTECTION SYSTEM
81	UNDER FREQUENCY RELAY
60	CAPACITOR CURRENT UNBALANCE SENSING RELAY
Q	POWER FACTOR CONTROLLER
DPM	DIGITAL POWER METER
DIM	DISTRIBUTED I/O MODULE (PROVIDED IN CSCS)
V METER	DIGITAL VOLTMETER
SS	SYNCHRONIZING SWITCH,3–POSITION,AUTO–OFF–MAN
L	SYNCHRONIZING LAMP
V	VOLTMETER
F	FREQUENCY METER
S	SYNCHROSCOPE
LL	LINE INDICATING LAMP
TS	CURRENT TEST SWITCH
TS	POTENTIAL TEST SWITCH
▲	LOCATED IN THE SWITCHYARD JUNCTION BOX
◓	LOCATED IN THE CONTROL AND RELAY BOARD
▼	LOCATED IN THE 22 kV SWITCHGEAR JUNCTION BOX
◇	FOR 22 kV SWITCHGEAR CONTROL & PROTECTIVE CIRCUITS
	WYE CONNECTED CT OF SECONDARY WINDING
	DELTA CONNECTED CT OF SECONDARY WINDING (IF ANY)
	TRANSFORMER BUSHING CT OF SECONDARY WINDING, WYE CONNECTED FOR PHASE OR NEUTRAL

REFERENCE DRAWING

SINGLE LINE DIAGRAM.....DWG NO. FA2–011/63059

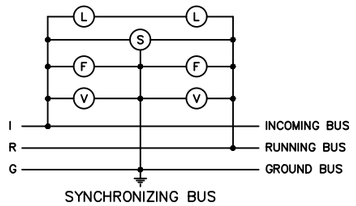

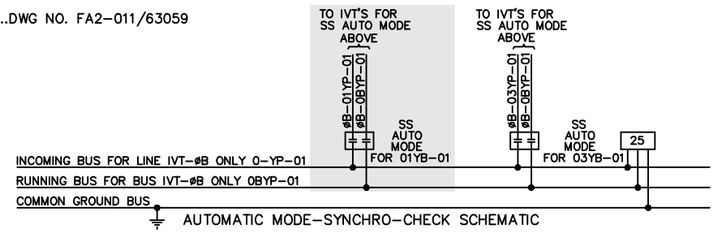

NEA–M

กองออกแบบสถานีไฟฟ้า ฝ่ายงานสถานีไฟฟ้า	การไฟฟ้าส่วนภูมิภาค	ใช้แทนแบบ —
ผู้เขียน ศุภชัย	ผู้ว่าการ (แทน)	ถูกแทนโดยแบบ —
ผู้สำรวจ —		เขียนเสร็จวันที่ 24 ส.ค. 2563
วิศวกร —	สถานีไฟฟ้าน้ำยืน จ. อุบลราชธานี (เพิ่มเติม)	แก้แบบวันที่ —
หัวหน้าแผนก วรเวช	มิเตอร์ และ รีเลย์ไดอะแกรม	มิติเป็น —
ผู้อำนวยการกอง		มาตราส่วน —
ผู้อำนวยการฝ่าย (แทน)	NAM YUEN SUBSTATION (ADD)	แบบเลขที่ FA4–011/63075
รองผู้ว่าการวิศวกรรม —	METERING AND RELAYING DIAGRAM	แผ่นที่ 1 ของจำนวน 1 แผ่น