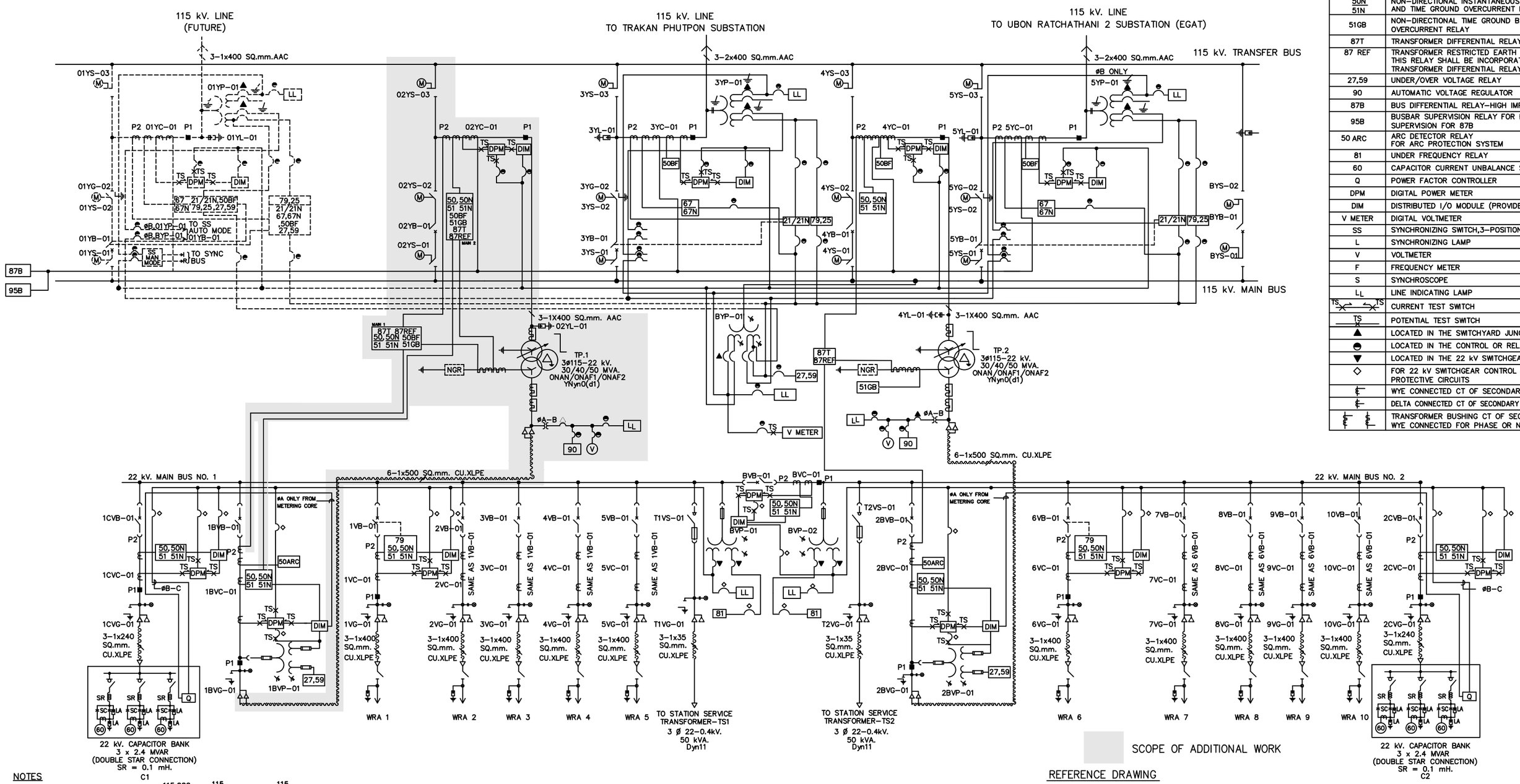

DEVICES	EXPLANATION
21/ 21N	DISTANCE TIME-STEP PHASE AND GROUND DISTANCE RELAY
67	DIRECTIONAL PHASE OVERCURRENT RELAY
67N	DIRECTIONAL GROUND OVERCURRENT RELAY
25	SYNCHROCHECK RELAY
79	AUTOMATIC RECLOSING RELAY
50 BF	BREAKER FAILURE RELAYING
50/51	NON-DIRECTIONAL INSTANTANEOUS AND TIME PHASE OVERCURRENT RELAY
50N/51N	NON-DIRECTIONAL INSTANTANEOUS AND TIME GROUND OVERCURRENT RELAY
51GB	NON-DIRECTIONAL TIME GROUND BACKUP OVERCURRENT RELAY
87T	TRANSFORMER DIFFERENTIAL RELAY
87 REF	TRANSFORMER RESTRICTED EARTH FAULT RELAY THIS RELAY SHALL BE INCORPORATED IN THE TRANSFORMER DIFFERENTIAL RELAY (87T)
27,59	UNDER/OVER VOLTAGE RELAY
90	AUTOMATIC VOLTAGE REGULATOR
87B	BUS DIFFERENTIAL RELAY-HIGH IMPEDANCE TYPE
95B	BUSBAR SUPERVISION RELAY FOR BUSWIRE SUPERVISION FOR 87B
50 ARC	ARC DETECTOR RELAY FOR ARC PROTECTION SYSTEM
81	UNDER FREQUENCY RELAY
60	CAPACITOR CURRENT UNBALANCE SENSING RELAY
Q	POWER FACTOR CONTROLLER
DPM	DIGITAL POWER METER
DIM	DISTRIBUTED I/O MODULE (PROVIDED IN CSCS)
V METER	DIGITAL VOLTMETER
SS	SYNCHRONIZING SWITCH,3-POSITION,AUTO-OFF-MAN
L	SYNCHRONIZING LAMP
V	VOLTMETER
F	FREQUENCY METER
S	SYNCHROSCOPE
LL	LINE INDICATING LAMP
TS	CURRENT TEST SWITCH
TS	POTENTIAL TEST SWITCH
▲	LOCATED IN THE SWITCHYARD JUNCTION BOX
◓	LOCATED IN THE CONTROL OR RELAY BOARD
▼	LOCATED IN THE 22 kV SWITCHGEAR JUNCTION BOX
◇	FOR 22 kV SWITCHGEAR CONTROL & PROTECTIVE CIRCUITS
	WYE CONNECTED CT OF SECONDARY WINDING
	DELTA CONNECTED CT OF SECONDARY WINDING (IF ANY)
	TRANSFORMER BUSHING CT OF SECONDARY WINDING, WYE CONNECTED FOR PHASE OR NEUTRAL

NOTES

1. 115 KV. CVT RATIO — $\frac{115{,}000}{\sqrt{3}} : \frac{115}{\sqrt{3}} / 115 \;//\; \frac{115}{\sqrt{3}} / 115$ V — 200VA/0.5/1.5VF , 200VA/3P/1.5VF
2. 115 KV. CT RATIO — 1200/1000/900/800/600/500/400/300/200/100 : 1/1/1/1/1 A. — 50VA/0.5FS5 , 50VA/5P20 , 50VA/5P20 , 50VA/5P20 , 50VA/5P20
3. 115 KV. CT RATIO (02YC-01) — 1800/1500/1200/900/600/300 : 1 A. (CORE 1) — 50VA(@1200/1A)/5P20
   400/300/200 : 1/1/1 A (CORE 2-4) — 20VA/0.5FS5 , 30VA/5P20 , 30VA/5P20
   500/200/100 : 1 A – FOR HIGH SIDE TRANSFORMER CT. — 20VA/5P20
4. 22 KV. VT. RATIO — $\frac{22000}{\sqrt{3}} : \frac{110}{\sqrt{3}} / \frac{110}{\sqrt{3}}$ V — 50VA/0.5/1.9VF , 50VA/3P/1.9VF
5. 22 KV. CT. RATIO
   - 1800/1500/900 : 1/1/1/1 A – FOR INCOMING BREAKER — 20VA/0.5FS5 , 20VA/5P20 , 20VA/5P20 , 20VA/5P20
   - 1800/1500/900 : 1/1 A – FOR TIE BREAKER — 20VA/0.5FS5 , 20VA/5P20
   - 1800/1500/900 : 1/1 A – FOR NEUTRAL BUSHING CT. — 20VA/5P20 , 20VA/5P20
   - 1800/900 : 1/1 A – FOR TR. NEUTRAL BUSHING CT. — 20VA/5P20 , 20VA/5P20
   - 1800/900 : 1/1 A – FOR TR. LOW SIDE BUSHING CT. — 20VA/5P20 , 20VA/0.5FS5
   - 600/300 : 1/1 A – FOR OUTGOING 22 KV. — 20VA/0.5FS5 , 20VA/5P20
   - 600/300 : 1/1 A – FOR CAPACITOR BANK — 20VA/0.5FS5 , 20VA/5P20
6. THE NEUTRAL GROUNDING RESISTORS (NGR) ARE INDICATED FOR FUTURE INSTALLATION.
7. SYNCHRONIZING SCHEMATIC
   - 7.1 –YP-01 SHOWN THUS, REFER TO INCOMING IVT DESIGNATIONS.
   - 7.2 BYP-01 SHOWN THUS REFERS TO RUNNING BUS IVT
   - 7.3 øB ONLY ✓ SHOWN THUS, REFERS TO THE SECONDARY WINDING OF IVT FOR PHASE"B" AND USING FULL TAP WINDING 115V FOR SYNCHRONIZING SYSTEM WITH ONE END OF THE WINDING CONNECTED WITH COMMON GROUND BUS.
   - 7.4 MANUAL SYNCHRONIZING BY SYNCHROSCOPE SHALL UTILIZE INCOMING AND RUNNING SECONDARY VOLTAGES OF METERING CORES FROM"PHASE B" FOR BOTH IVT"S.
   - 7.5 AUTOMATIC SYCHRONISM VERIFICATION BY SYNCHRO CHECK RELAY (25) SHALL UTILIZE INCOMING AND RUNNING SECONDARY VOLTAGES OF RELAYING CORES FROM"PHASE B" FOR BOTH IVT"S.
8. FOR NEW INSTALLATION, RELAYS SHALL BE DOUBLE MAIN PROTECTION RELAY (MAIN1&2) AND DIFFERENT PRODUCT/MANUFACTURER

REFERENCE DRAWING

SINGLE LINE DIAGRAM.....DWG NO. FA1-011/61073

WRA-M

กองออกแบบสถานีไฟฟ้า ฝ่ายงานสถานีไฟฟ้า	การไฟฟ้าส่วนภูมิภาค	ใช้แทนแบบ –
ผู้เขียน ณัฐธัญ	ผู้ว่าการ (แทน)	ถูกแทนโดยแบบ –
ผู้สำรวจ ณัฐธัญ		เขียนเสร็จวันที่ 18 กย. 2561
วิศวกร ณัฐธัญ	สถานีไฟฟ้าวารินชำราบ จ.อุบลราชธานี	แก้แบบวันที่ –
หัวหน้าแผนก วรเวช	มิเตอร์ และ รีเลย์โดอะแกรม	มิติเป็น –
ผู้อำนวยการกอง		มาตราส่วน –
ผู้อำนวยการฝ่าย (แทน)	WARIN CHAMRAP SUBSTATION	แบบเลขที่ FA4-011/61055
รองผู้ว่าการวิศวกรรม	METERING AND RELAYING DIAGRAM	แผ่นที่ 1 ของจำนวน 1 แผ่น