TDDP.1 – KNI (ADD)

NOTES

1. 115 kV. CVT RATIO
$\frac{115,000}{\sqrt{3}} : \frac{115}{\sqrt{3}} / 115 \;//\; \frac{115}{\sqrt{3}} / 115$ V — 50VA/0.5/1.5VF , 50VA/3P/1.5VF
2. 115 kV. CT RATIO
1200/900/800/500/400/300 : 1/1/1/1 A. — 20VA/5P20 , 20VA/0.5FS5 , 20VA/5P20 , 20VA/5P20
3. 22 kV. VT. RATIO
$\frac{22000}{\sqrt{3}} : \frac{110}{\sqrt{3}} // \frac{110}{\sqrt{3}}$ V — 50VA/0.5/1.9VF , 50VA/3P/1.9VF
4. 22 kV. CT. RATIO

1800/1500/900	: 1/1/1/1 A	– FOR INCOMING BREAKER	20VA/5P20 , 20VA/0.5FS5 , 20VA/5P20 , 20VA/5P20
1800/1500/900	: 1/1 A	– FOR TIE BREAKER	20VA/0.5M5 , 20VA/5P20
600/300	: 1/1 A	– FOR OUTGOING 22 kV.	20VA/0.5FS5 , 20VA/5P20
600/300	: 1/1 A	– FOR CAPACITOR BANK	20VA/0.5FS5 , 20VA/5P20
1800/1500/900	: 1/1 A	– FOR LOW SIDE TRANSFORMER BUSHING CT.	20VA/5P20 , 20VA/5P20
1800/1500/900	: 1/1 A	– FOR NEUTRAL BUSHING CT.	20VA/5P20 , 20VA/5P20

5. THE NEUTRAL GROUNDING RESISTORS (NGR) ARE INDICATED FOR FUTURE INSTALLATION.
6. THE DEDICATED PROTECTION RELAY FOR 22 KV SWITCHGEAR SHALL BE STANDARDIZED WHICH CAN BE EITHER USED FOR INCOMING, OUTGOING FEEDERS OR CAPACITOR BANK FEEDERS.
7. SYNCHRONIZING SCHEMATIC
   7.1 0–YP–01 SHOWN THUS, REFER TO INCOMING IVT DESIGNATIONS.
   7.2 0BYP–01 SHOWN THUS REFERS TO RUNNING BUS IVT
   7.3 øB ONLY ⊿ SHOWN THUS, REFERS TO THE SECONDARY WINDING OF IVT FOR PHASE"B" AND USING FULL TAP WINDING 115V FOR SYNCHRONIZING SYSTEM WITH ONE END OF THE WINDING CONNECTED WITH COMMON GROUND BUS.
   7.4 MANUAL SYNCHRONIZING BY SYNCHROSCOPE SHALL UTILIZE INCOMING AND RUNNING SECONDARY VOLTAGES OF METERING CORES FROM"PHASE B" FOR BOTH IVT"S.
   7.5 AUTOMATIC SYCHRONISM VERIFICATION BY SYNCHRO CHECK RELAY (25) SHALL UTILIZE INCOMING AND RUNNING SECONDARY VOLTAGES OF RELAYING CORES FROM"PHASE B" FOR BOTH IVT"S.
8. EACH DIGITAL POWER METER (DPM) SHALL BE COMMUNICATED WITH AUTOMATIC METER READING (AMR) APPLICATION SERVER VIA SWITCH NETWORK.
9. FOR NEW INSTALLATION, RELAYS SHALL BE DOUBLE MAIN PROTECTION RELAY(MAIN1&2) AND DIFFERENT PRODUCT/MANUFACTURER.

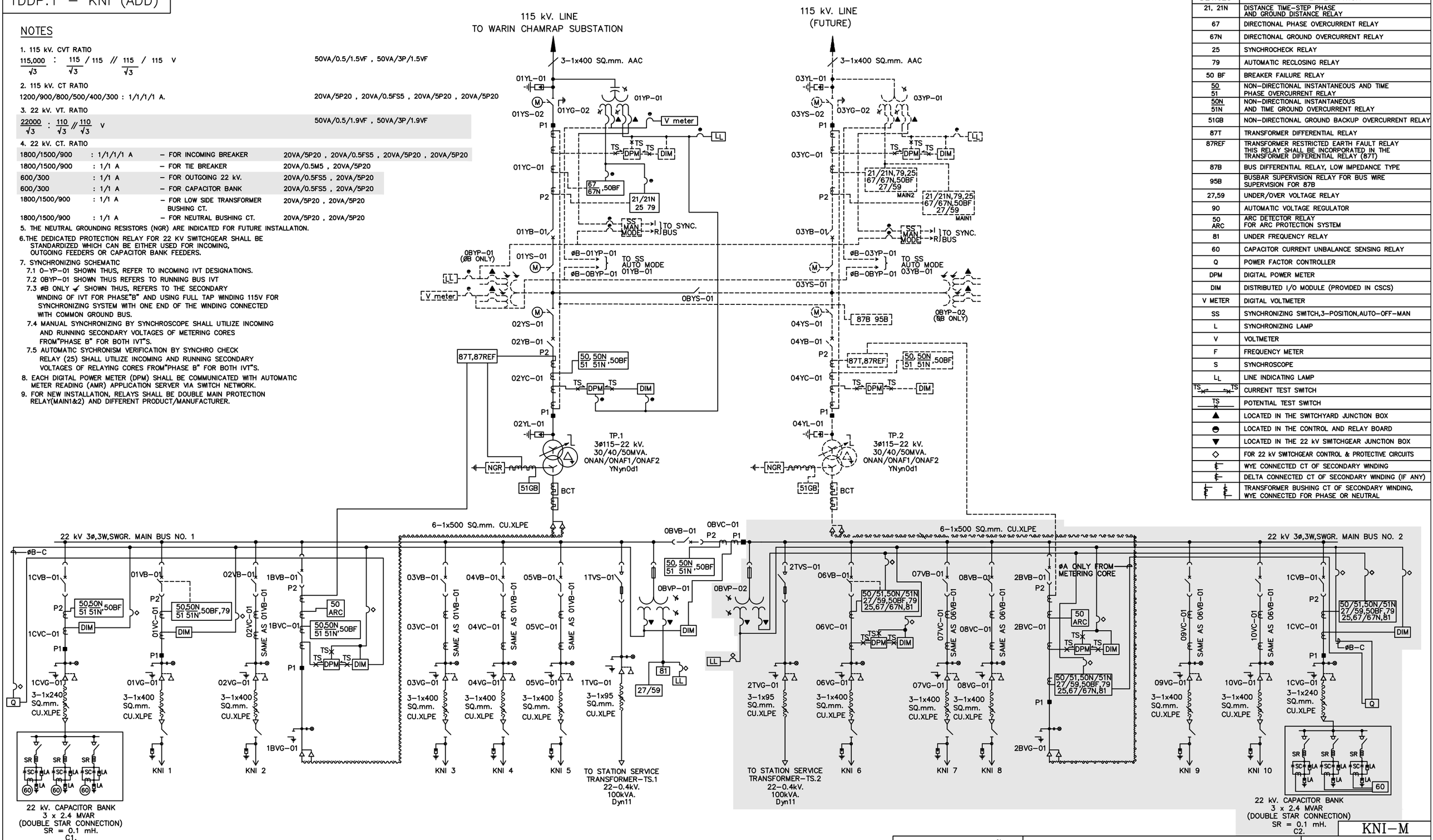

DEVICES	EXPLANATION
21, 21N	DISTANCE TIME–STEP PHASE AND GROUND DISTANCE RELAY
67	DIRECTIONAL PHASE OVERCURRENT RELAY
67N	DIRECTIONAL GROUND OVERCURRENT RELAY
25	SYNCHROCHECK RELAY
79	AUTOMATIC RECLOSING RELAY
50 BF	BREAKER FAILURE RELAY
50 / 51	NON–DIRECTIONAL INSTANTANEOUS AND TIME PHASE OVERCURRENT RELAY
50N / 51N	NON–DIRECTIONAL INSTANTANEOUS AND TIME GROUND OVERCURRENT RELAY
51GB	NON–DIRECTIONAL GROUND BACKUP OVERCURRENT RELAY
87T	TRANSFORMER DIFFERENTIAL RELAY
87REF	TRANSFORMER RESTRICTED EARTH FAULT RELAY THIS RELAY SHALL BE INCORPORATED IN THE TRANSFORMER DIFFERENTIAL RELAY (87T)
87B	BUS DIFFERENTIAL RELAY, LOW IMPEDANCE TYPE
95B	BUSBAR SUPERVISION RELAY FOR BUS WIRE SUPERVISION FOR 87B
27,59	UNDER/OVER VOLTAGE RELAY
90	AUTOMATIC VOLTAGE REGULATOR
50 ARC	ARC DETECTOR RELAY FOR ARC PROTECTION SYSTEM
81	UNDER FREQUENCY RELAY
60	CAPACITOR CURRENT UNBALANCE SENSING RELAY
Q	POWER FACTOR CONTROLLER
DPM	DIGITAL POWER METER
DIM	DISTRIBUTED I/O MODULE (PROVIDED IN CSCS)
V METER	DIGITAL VOLTMETER
SS	SYNCHRONIZING SWITCH,3–POSITION,AUTO–OFF–MAN
L	SYNCHRONIZING LAMP
V	VOLTMETER
F	FREQUENCY METER
S	SYNCHROSCOPE
LL	LINE INDICATING LAMP
TS	CURRENT TEST SWITCH
TS	POTENTIAL TEST SWITCH
▲	LOCATED IN THE SWITCHYARD JUNCTION BOX
◓	LOCATED IN THE CONTROL AND RELAY BOARD
▼	LOCATED IN THE 22 kV SWITCHGEAR JUNCTION BOX
◇	FOR 22 kV SWITCHGEAR CONTROL & PROTECTIVE CIRCUITS
	WYE CONNECTED CT OF SECONDARY WINDING
	DELTA CONNECTED CT OF SECONDARY WINDING (IF ANY)
	TRANSFORMER BUSHING CT OF SECONDARY WINDING, WYE CONNECTED FOR PHASE OR NEUTRAL

SCOPE OF ADDITIONAL WORK

REFERENCE DRAWING

SINGLE LINE DIAGRAM.....DWG NO. FA2–011/62049

กองออกแบบสถานีไฟฟ้า ฝ่ายงานสถานีไฟฟ้า	การไฟฟ้าส่วนภูมิภาค	ใช้แทนแบบ ———
ผู้เขียน ภรวดี ผู้สำรวจ ภรวดี , สุขชัย วิศวกร ภรวดี หัวหน้าแผนก วรเวช ผู้อำนวยการกอง ผู้อำนวยการฝ่าย (แทน)	ผู้ว่าการ (แทน)	ถูกแทนโดยแบบ ———
	สถานีไฟฟ้าเชื่องใน จ.อุบลราชธานี (เพิ่มเติม) มิเตอร์ และ รีเลย์ไดอะแกรม	เขียนเสร็จวันที่ 12 มิย 62 แก้แบบวันที่ ——— มิติเป็น ——— มาตราส่วน ———
รองผู้ว่าการวิศวกรรม ———	KHUEANG NAI SUBSTATION (ADD) METERING AND RELAYING DIAGRAM	แบบเลขที่ FA4–011/62049 แผ่นที่ 1 ของจำนวน 1 แผ่น

KNI–M