TDDP.1 PYW

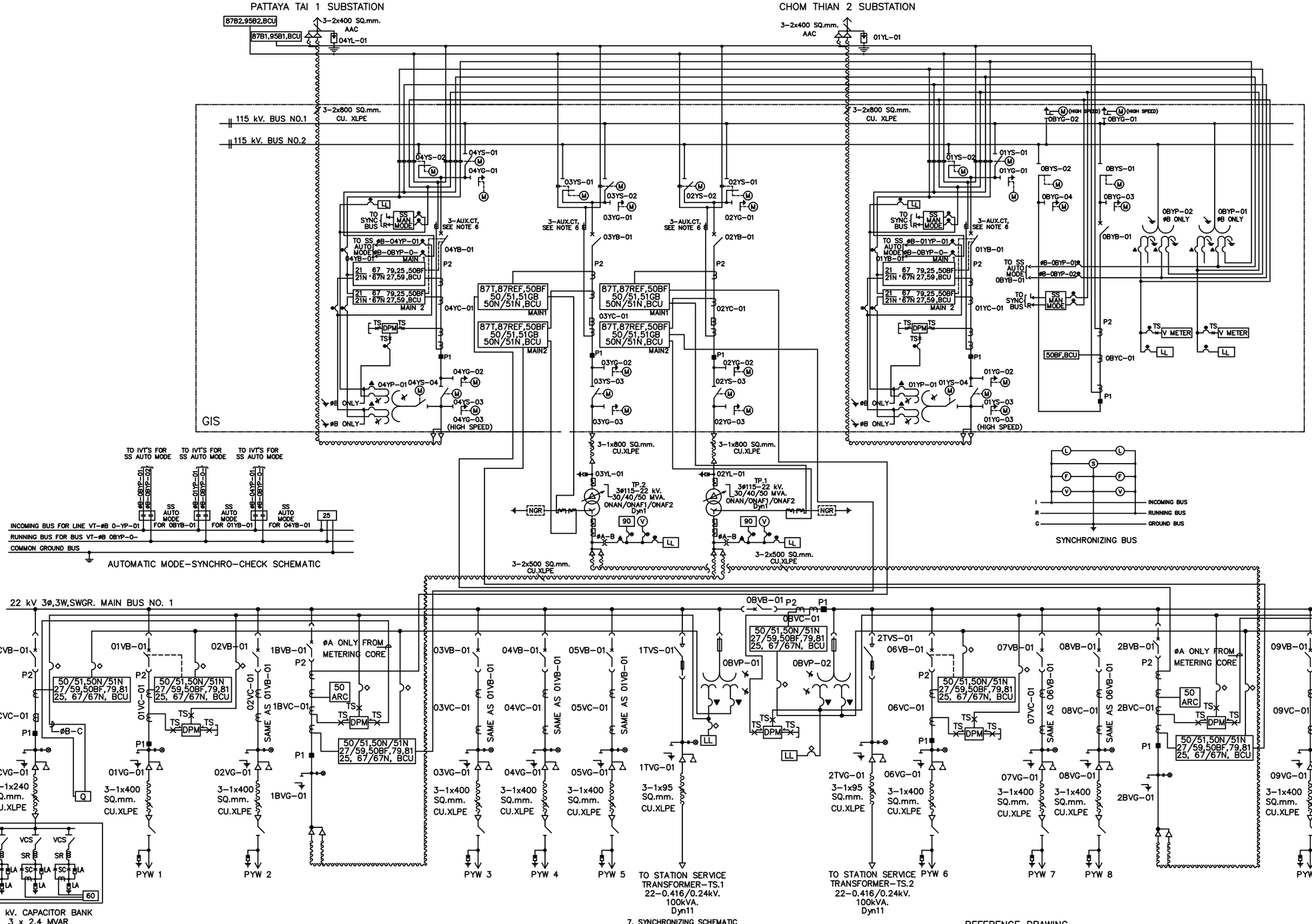

DEVICES	EXPLANATION
87L	LINE CURRENT DIFFERENTIAL RELAY
21, 21N	DISTANCE TIME-STEP PHASE AND GROUND DISTANCE RELAY
67, 67N	DIRECTIONAL PHASE AND GROUND OVERCURRENT RELAY
27,59	UNDER/OVER VOLTAGE RELAYS
25	SYNCHROCHECK RELAY
79	AUTOMATIC RECLOSING RELAY
50BF	BREAKER FAILURE RELAY
50 / 51	NON-DIRECTIONAL INSTANTANEOUS AND TIME PHASE OVERCURRENT RELAY
50N / 51N	NON-DIRECTIONAL INSTANTANEOUS AND TIME GROUND OVERCURRENT RELAY
51GB	NON-DIRECTIONAL GROUND BACKUP OVERCURRENT RELAY
87T	TRANSFORMER DIFFERENTIAL RELAY
87REF	TRANSFORMER RESTRICTED EARTH FAULT RELAY THIS RELAY SHALL BE INCORPORATED IN THE TRANSFORMER DIFFERENTIAL RELAY (87T)
90	AUTOMATIC VOLTAGE REGULATOR
87B1, 87B2	BUS DIFFERENTIAL RELAYS – LOW IMPEDANCE TYPE
95B1 95B2	BUS BAR SUPERVISION RELAY FOR BUSWIRE SUPERVISION FOR 87B1 AND 87B2
81	UNDER FREQUENCY RELAY
60	CAPACITOR CURRENT UNBALANCE SENSING RELAY
Q	POWER FACTOR CONTROLLER
DPM	DIGITAL POWER METER
DIM	DISTRIBUTED I/O MODULE (PROVIDED IN CSCS)
V METER	DIGITAL VOLTMETER
SS	SYNCHRONIZING SWITCH,3-POSITION,AUTO-OFF-MAN
L	SYNCHRONIZING LAMP
V	VOLTMETER
F	FREQUENCY METER
S	SYNCHROSCOPE
LL	LINE INDICATING LAMP
TS	CURRENT TEST SWITCH
TS	POTENTIAL TEST SWITCH
▲	LOCATED IN THE SWITCHYARD JUNCTION BOX
◓	LOCATED IN THE CONTROL AND RELAY BOARD
▼	LOCATED IN THE 22 kV SWITCHGEAR JUNCTION BOX
◇	LOCATED IN 22 kV SWITCHGEAR CONTROL PROTECTIVE CIRCUITS
	WYE CONNECTED CT OF SECONDARY WINDING
	DELTA CONNECTED CT OF SECONDARY WINDING (IF ANY)
	TRANSFORMER BUSHING CT OF SECONDARY WINDING, WYE CONNECTED FOR PHASE OR NEUTRAL
BCU	BAY CONTROL UNIT
	BUS GAS BUFFER MODULE (FOR DE-ENERGIZING ONLY ONE BUS DURING EXTENSION)

NOTES

1. 115 KV. IVT RATIO $\frac{115{,}000}{\sqrt{3}} : \frac{115}{\sqrt{3}} / 115 \;//\; \frac{115}{\sqrt{3}} / 115$ V — 50VA/0.2/1.5VF, 50VA/3P/1.5VF (SIMULTANEOUS BURDEN 100VA)
2. 115 KV. CT RATIO
   - 1800/1500/1200/900/600/300 : 1/1/1/1 A. – FOR LINE BAY — 20VA/5P20 , 20VA/0.5FS5 , 20VA/5P20 , 20VA/5P20
   - 1800/1500/1200/900/600/300 : 1/1/1 A. – FOR COUPLER BAY — 20VA/5P20, 20VA/5P20, 20VA/5P20
   - 1800/1500/1200/900/600/300 : 1 A. – FOR TRANSFORMER BAY (CORE1) — 20VA/5P20
   - 400/300/200 : 1/1/1 A. – FOR TRANSFORMER BAY (CORE2-4) — 20VA/0.5FS5, 30VA/5P20, 30VA/5P20
   - ***PARTICULAR REQUIREMENT FOR ALL 5P20 CLASS CT's. CURRENT RATIO ERROR AT 100% OF RATED CURRENT < 0.5%
3. 22 KV. VT. RATIO $\frac{22000}{\sqrt{3}} : \frac{110}{\sqrt{3}} / \frac{110}{\sqrt{3}}$ V — 50VA/0.5/1.9VF, 50VA/3P/1.9VF
4. 22 KV. CT. RATIO
   - 1800/1500/900 : 1/1/1/1 A – FOR INCOMING BREAKER — 20VA/5P20 , 20VA/0.5FS5 , 20VA/5P20 , 20VA/5P20
   - 1800/1500/900 : 1/1 A – FOR TIE BREAKER — 20VA/0.5FS5 , 20VA/5P20
   - 600/300 : 1/1 A – FOR OUTGOING 22 kV. — 20VA/0.5FS5 , 20VA/5P20
   - 1800/900 : 1/1 A – FOR LOW SIDE TRANSFORMER BUSHING CT. — 20VA/5P20 , 20VA/0.5FS5
   - 1800/900 : 1/1 A – FOR NEUTRAL BUSHING CT. — 20VA/5P20 , 20VA/5P20
   - 600/300 : 1/1 A – FOR CAPACITOR BANK — 20VA/0.5FS5 , 20VA/5P20
   - ***PARTICULAR REQUIREMENT FOR ALL 5P20 CLASS CT's. CURRENT RATIO ERROR AT 100% OF RATED CURRENT < 0.5%
5. THE NEUTRAL GROUND RESISTOR (NGR) ARE INDICATED FOR FUTURE INSTALLATION.
6. AUXILIARY CURRENT TRANSFORMERS SHOWN THUS, SHALL BE AS PARTS OF THE BUS DIFFERENTIAL RELAYS.
7. SYNCHRONIZING SCHEMATIC
   - 7.1 -YP-0- SHOWN THUS, REFERS TO INCOMING IVT DESIGNATIONS.
   - 7.2 0BYP-0- SHOWN THUS REFERS TO RUNNING BUS IVT FOR BUS No.1 OR No.2
   - 7.3 øB ONLY ✓ SHOWN THUS, REFERS TO THE SECONDARY WINDING OF IVT FOR PHASE "B" AND USING FULL TAP WINDING 115V FOR SYNCHRONIZING SYSTEM WITH ONE END OF THE WINDING CONNECTED WITH COMMON GROUND BUS.
   - 7.4. MANUAL SYNCHRONIZING BY SYNCHROSCOPE SHALL UTILIZE INCOMING AND RUNNING SECONDARY VOLTAGES OF METERING CORES FROM "PHASE B" FOR BOTH IVT'S.
   - 7.5. AUTOMATIC SYCHRONISM VERIFICATION BY SYNCHRO CHECK RELAY(25) SHALL UTILIZE INCOMING AND RUNNING SECONDARY VOLTAGES OF RELAYING CORES FROM "PHASE B" FOR BOTH IVT'S.
8. THE MAIN-1 PROTECTION RELAY AND THE MAIN-2 RELAY WHICH ARE REFERED ON THIS DRAWING SHALL BE PROVIDED FROM DIFFERENT MANUFACTURER.
9. EACH DIGITAL POWER METER (DPM) SHALL BE COMMUNICATED WITH AUTOMATIC METER READING (AMR) APPLICATION SERVER VIA SWITCH NETWORK.
10. THE DEDICATED PROTECTIVE RELAY FOR 22kV SWITCHGEAR SHALL BE STANDARDIZED WHICH CAN BE EITHER USED FOR INCOMING, BUS COUPLER, OUTGOING FEEDERS OR CAPACITOR BANK FEEDER.
11. NETWORK TOPOLOGY OF SUBSTATION CONTROL AND PROTECTION SYSTEM IS TOPOLOGY 1

REFERENCE DRAWING

– SINGLE LINE DIAGRAM ..... DWG. NO. FA3-011/64002

PYW – M

กองออกแบบสถานีไฟฟ้า ฝ่ายงานสถานีไฟฟ้า	การไฟฟ้าส่วนภูมิภาค	ใช้แทนแบบ –
ผู้เขียน ณัฐธัญ	ผู้ว่าการ (แทน)	ถูกแทนโดยแบบ –
ผู้สำรวจ –		เขียนเสร็จวันที่ 5 มค. 2564
วิศวกร ณัฐธัญ	สถานีไฟฟ้าพัทยาใต้ 3 จ.ชลบุรี มิเตอร์ และ รีเลย์ไดอะแกรม	แก้แบบวันที่ –
หัวหน้าแผนก วรเวช		มิติเป็น –
ผู้อำนวยการกอง		มาตราส่วน –
ผู้อำนวยการฝ่าย (แทน)	PATTAYA TAI 3 SUBSTATION CHONBURI PROVINCE METERING AND RELAYING DIAGRAM	แบบเลขที่ FA4-011/64003
รองผู้ว่าการวิศวกรรม –		แผ่นที่ 1 ของจำนวน 1 แผ่น