TDDP.1 BVA.

NOTES

1. 115 KV. IVT RATIO $\frac{115,000}{\sqrt{3}} : \frac{115}{\sqrt{3}} / 115 \;//\; \frac{115}{\sqrt{3}} / 115$ V (01YP–01,03YP–01,0BYP–01) — 50VA/0.2/1.5VF , 50VA/3P/1.5VF (SIMULTANEOUS BURDEN = 100 VA)
2. 115 KV. CT RATIO 1800/1500/1200/900/600/300 : 1/1/1/1 A. – FOR LINE BAY (01YC–01,03YC–01) — 20VA/5P20,20VA/0.5FS5,20VA/5P20,20VA/5P20
   (02YC–01,04YC–01) 1800/1500/1200/900/600/300 : 1 A.– FOR TRANSFORMER BAY (CORE NO. 1) — 20VA/5P20
   400/300/200 : 1/1/1 A. – FOR TRANSFORMER BAY (CORE NO. 2–4) — 20VA/0.5FS5,30VA/5P20, 30VA/5P20
   500/200/100 : 1A – FOR HIGH SIDE TRANSFORMER BUSHING CT — 20VA/5P20
3. 22 kV VT RATIO $\frac{22,000}{\sqrt{3}} : \frac{110}{\sqrt{3}} \;//\; \frac{110}{\sqrt{3}}$ V — 50VA/0.5/1.9VF , 50VA/3P/1.9VF
4. 22 kV CT RATIO 1800/1500/900 : 1/1/1/1 A – FOR INCOMING BREAKER — 20VA/5P20, 20VA/0.5FS5, 20VA/5P20, 20VA/5P20
   1800/1500/900 : 1/1 A – FOR TIE BREAKER — 20VA/0.5FS5 , 20VA/5P20
   1800/900 : 1/1 A – FOR LOW SIDE TRANSFORMER BUSHING CT — 20VA/5P20 , 20VA/0.5FS5
   1800/900 : 1/1 A – FOR NEUTRAL TRANSFORMER BUSHING CT — 20VA/5P20 , 20VA/5P20
   600/300 : 1/1 A – FOR OUTGOING 22 kV — 20VA/0.5FS5 , 20VA/5P20
   600/300 : 1/1 A – FOR CAPACITOR BANK — 20VA/0.5FS5 , 20VA/5P20
5. THE NEUTRAL GROUNDING RESISTORS (NGR) ARE INDICATED FOR FUTURE INSTALLATION.
6. SYNCHRONZING SCHEMATIC
   6.1 0–YP–01 SHOWN THUS, REFER TO INCOMING IVT DESIGNATIONS.
   6.2 0BYP–01 SHOWN THUS REFERS TO RUNNING BUS IVT
   6.3 øB ONLY ✓ SHOWN THUS, REFERS TO THE SECONDARY WINDING OF IVT FOR PHASE"B" AND USING FULL TAP WINDING 115V FOR SYNCHRONIZING SYSTEM WITH ONE END OF THE WINDING CONNECTED WITH COMMON GROUND BUS.
   6.4 MANUAL SYNCHRONIZING BY SYNCHROSCOPE SHALL UTILIZE INCOMING AND RUNNING SECONDARY VOLTAGES OF METERING CORES FROM"PHASE B" FOR BOTH IVT"S.
   6.5 AUTOMATIC SYCHRONISM VERIFICATION BY SYNCHRO CHECK RELAY (25) SHALL UTILIZE INCOMING AND RUNNING SECONDARY VOLTAGES OF RELAYING CORES FROM"PHASE B" FOR BOTH IVT"S.
7. FOR 115 kV. SYSTEM PROTCTION, RELAYS SHALL BE DOUBLE MAIN PROTECTION RELAY (MAIN1&2) AND DIFFERENT PRODUCT/MANUFACTURER.
8. THE DEDICATED PROTECTIVE RELAY FOR 22 kV. SWITCHGEAR SHALL BE STANDARDIZED WHICH CAN BE EITHER USED FOR INCOMING, BUS COUPLER, OUTGOING FEEDERS OR CAPACITOR BANK FEEDERS.
9. EACH DIGTAL POWER METER (DPM) SHALL BE COMMUNICASTED WITH AUTOMATIC METER READING (AMR) APPLICATION SERVER VIA SWITCH NETWORK.
10. NETWORK TOPOLOGY OF SUBSTATION CONTROL AND PROTECTION SYSTEM IS TOPOLOGY 1.

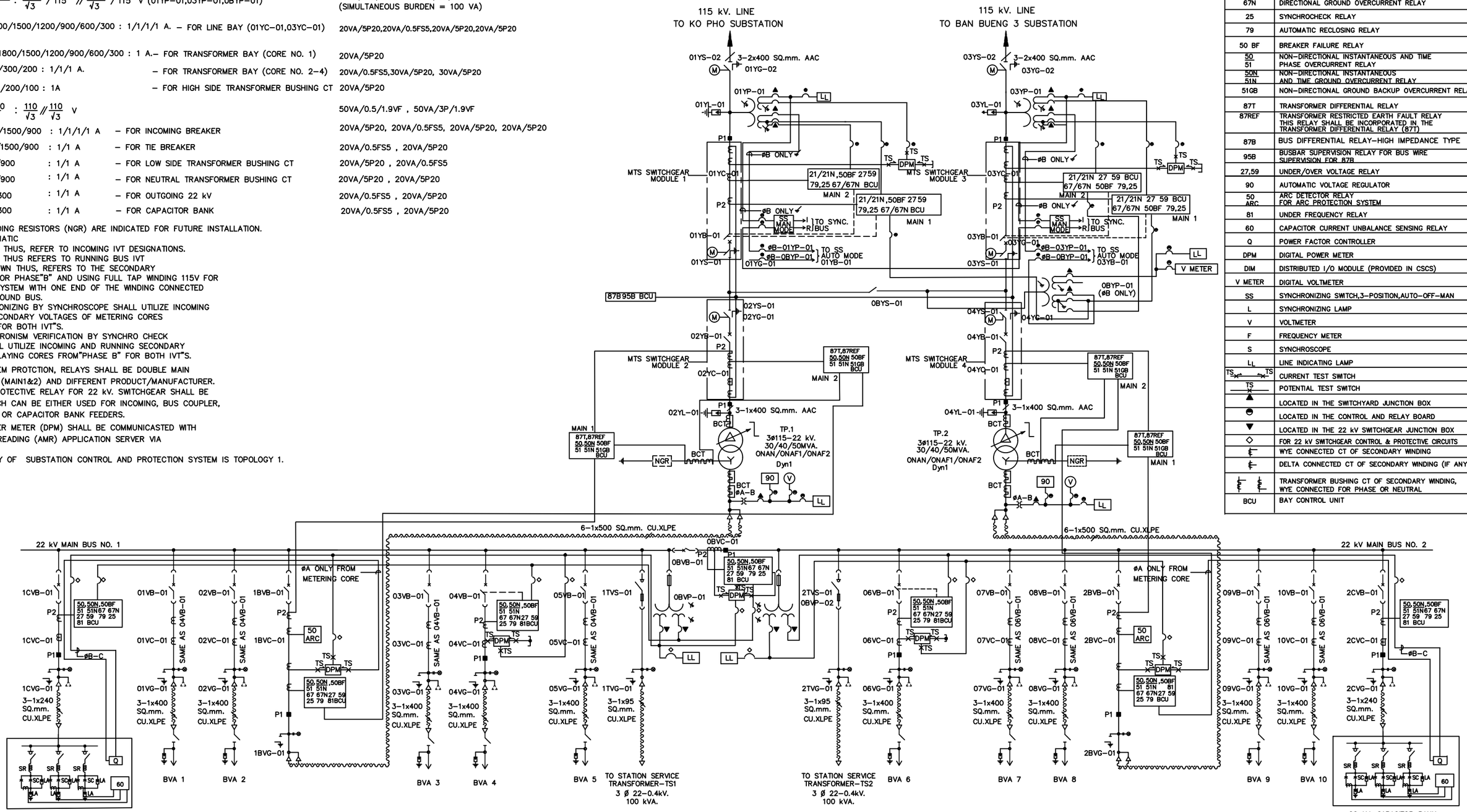

DEVICES	EXPLANATION
87L	LINE CURRENT DIFFERENTIAL RELAY
21, 21N	DISTANCE TIME–STEP PHASE AND GROUND DISTANCE RELAY
67	DIRECTIONAL PHASE OVERCURRENT RELAY
67N	DIRECTIONAL GROUND OVERCURRENT RELAY
25	SYNCHROCHECK RELAY
79	AUTOMATIC RECLOSING RELAY
50 BF	BREAKER FAILURE RELAY
50 / 51	NON–DIRECTIONAL INSTANTANEOUS AND TIME PHASE OVERCURRENT RELAY
50N / 51N	NON–DIRECTIONAL INSTANTANEOUS AND TIME GROUND OVERCURRENT RELAY
51GB	NON–DIRECTIONAL GROUND BACKUP OVERCURRENT RELAY
87T	TRANSFORMER DIFFERENTIAL RELAY
87REF	TRANSFORMER RESTRICTED EARTH FAULT RELAY THIS RELAY SHALL BE INCORPORATED IN THE TRANSFORMER DIFFERENTIAL RELAY (87T)
87B	BUS DIFFERENTIAL RELAY–HIGH IMPEDANCE TYPE
95B	BUSBAR SUPERVISION RELAY FOR BUS WIRE SUPERVISION FOR 87B
27,59	UNDER/OVER VOLTAGE RELAY
90	AUTOMATIC VOLTAGE REGULATOR
50 ARC	ARC DETECTOR RELAY FOR ARC PROTECTION SYSTEM
81	UNDER FREQUENCY RELAY
60	CAPACITOR CURRENT UNBALANCE SENSING RELAY
Q	POWER FACTOR CONTROLLER
DPM	DIGITAL POWER METER
DIM	DISTRIBUTED I/O MODULE (PROVIDED IN CSCS)
V METER	DIGITAL VOLTMETER
SS	SYNCHRONIZING SWITCH,3–POSITION,AUTO–OFF–MAN
L	SYNCHRONIZING LAMP
V	VOLTMETER
F	FREQUENCY METER
S	SYNCHROSCOPE
LL	LINE INDICATING LAMP
TS	CURRENT TEST SWITCH
TS	POTENTIAL TEST SWITCH
▲	LOCATED IN THE SWITCHYARD JUNCTION BOX
◓	LOCATED IN THE CONTROL AND RELAY BOARD
▼	LOCATED IN THE 22 kV SWITCHGEAR JUNCTION BOX
◇	FOR 22 kV SWITCHGEAR CONTROL & PROTECTIVE CIRCUITS
	WYE CONNECTED CT OF SECONDARY WINDING
	DELTA CONNECTED CT OF SECONDARY WINDING (IF ANY)
	TRANSFORMER BUSHING CT OF SECONDARY WINDING, WYE CONNECTED FOR PHASE OR NEUTRAL
BCU	BAY CONTROL UNIT

LEGENDS

— — — — FUTURE

MTS COMPACT SWITCHGEAR (MTS = MIXED TECHNOLOGY SWITCHGEAR)

REFERENCE DRAWING

SINGLE LINE DIAGRAM.....DWG NO. FA3–011/62026

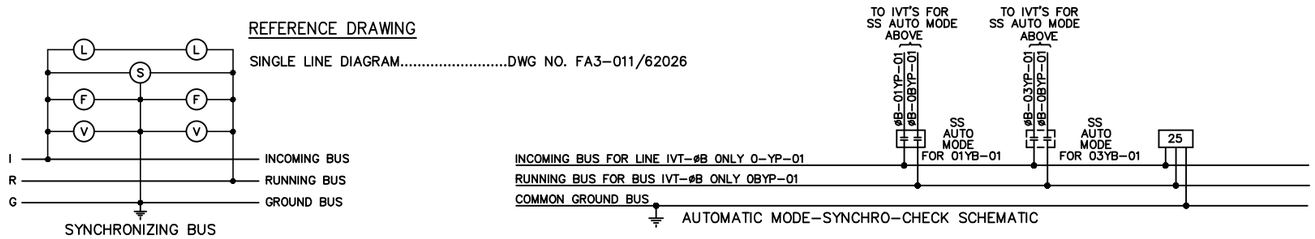

BVA–M

กองออกแบบสถานีไฟฟ้า ฝ่ายงานสถานีไฟฟ้า	การไฟฟ้าส่วนภูมิภาค	ใช้แทนแบบ —
ผู้เขียน ศุภชัย	ผู้วาการ (แทน)	ถูกแทนโดยแบบ —
ผู้สำรวจ —		เขียนเสร็จวันที่ 23 ส.ค. 2562
วิศวกร —		แก้แบบวันที่ —
หัวหน้าแผนก วรเวช	สถานีไฟฟ้าบ่อทอง จ. ชลบุรี	มิติเป็น —
ผู้อำนวยการกอง	มิเตอร์ และ รีเลย์ไดอะแกรม	มาตราส่วน —
ผู้อำนวยการฝ่าย (แทน)		
รองผู้วาการวิศวกรรม —	BO THONG SUBSTATION METERING AND RELAYING DIAGRAM	แบบเลขที่ FA4–011/62079
		แผ่นที่ 1 ของจำนวน 1 แผ่น