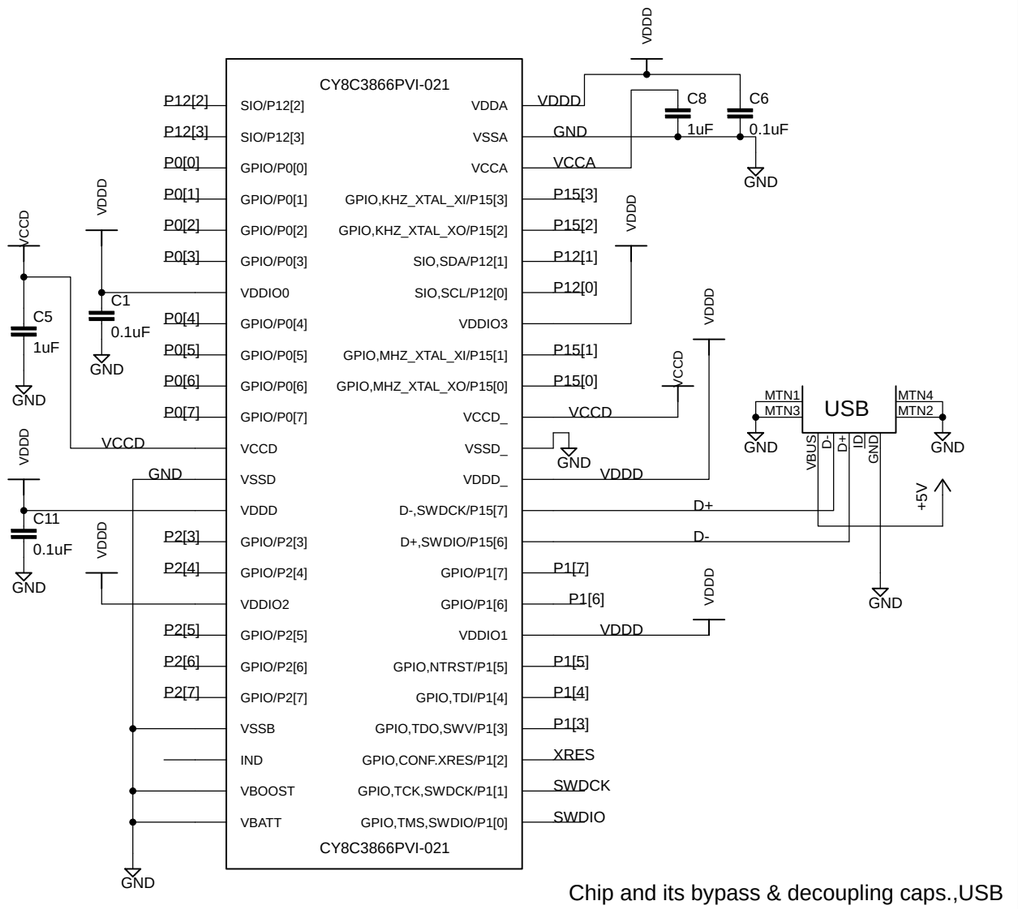

Chip and its bypass & decoupling caps.,USB

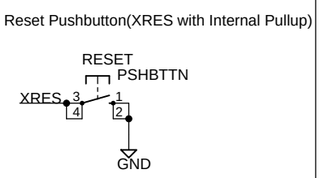

XRES - Reset Pushbutton

Mounting Holes

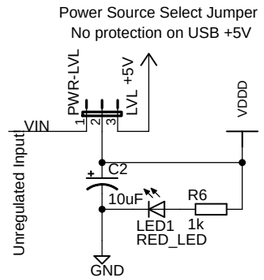

Power Section

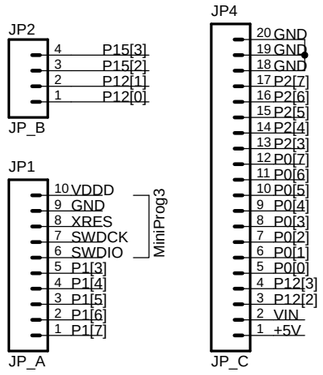

GPIO and Programming Headers

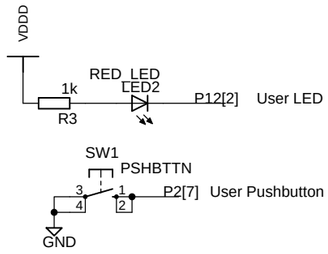

Prototyping Area

QuickPSoC3

V2.0 - Long Pads

This work is licensed under a Creative Commons Attribution-ShareAlike 3.0 Unported License.
http://kmmankad.blogspot.com

This work is licensed under a Creative Commons Attribution-ShareAlike 3.0 Unported License.

open hardware

Title:	QuickPSoC3V2_LongPads_04042012
Version:	Quick&Dirty V2 - Long Pads
	Friday,15-Jun-12 1:02:48 PM
Drawn By:	Author:Kartik Mankad 1/1