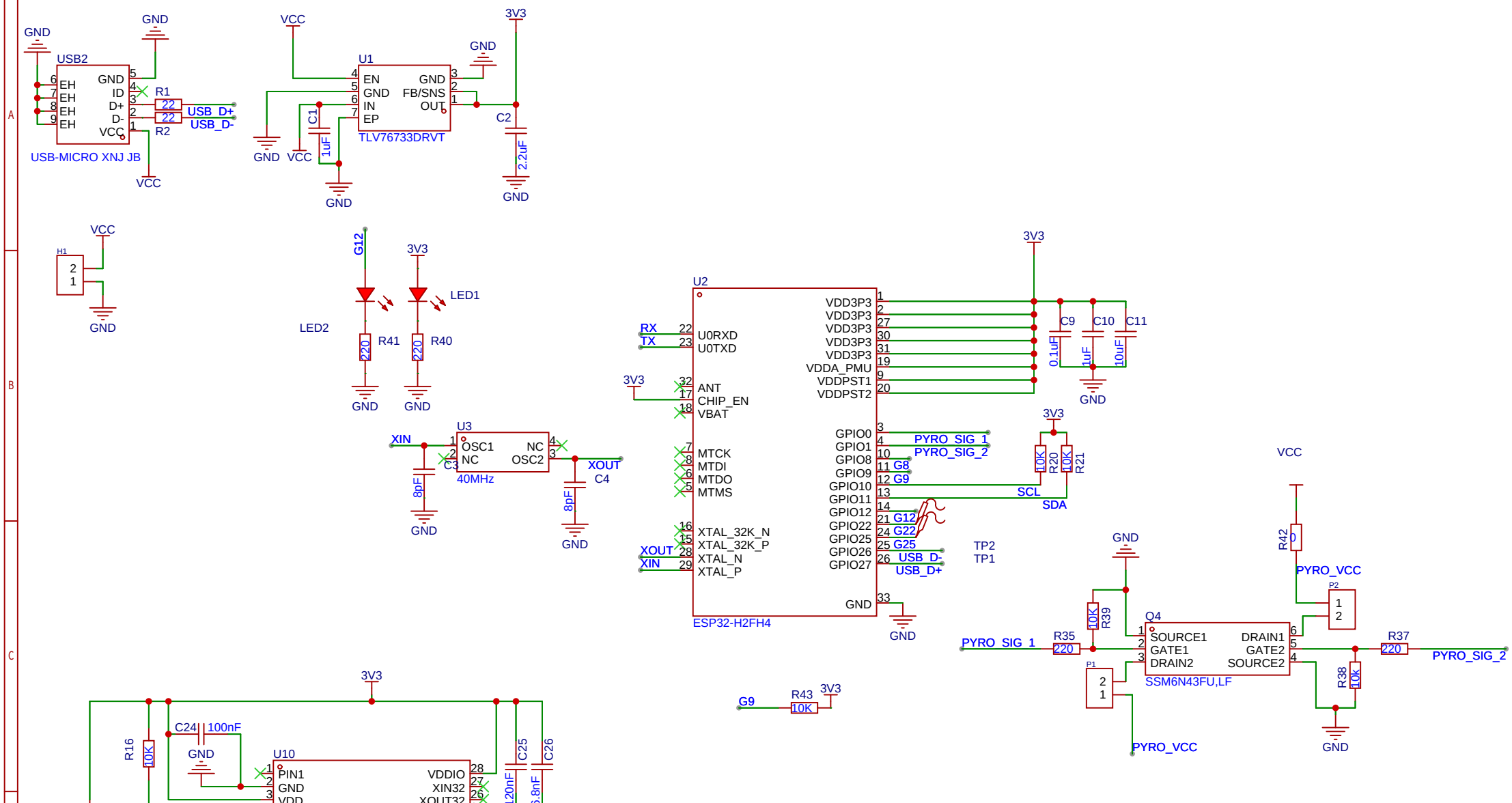

Schematic	Schematic1	Create at	2025-04-12
		Update at	2025-10-20
Board	Board1	Page	P1
Drawn	zer0		
Reviewed			
		Version	Size	Page 1 Total 1
EasyEDA		V1.0	A4	EasyEDA.com