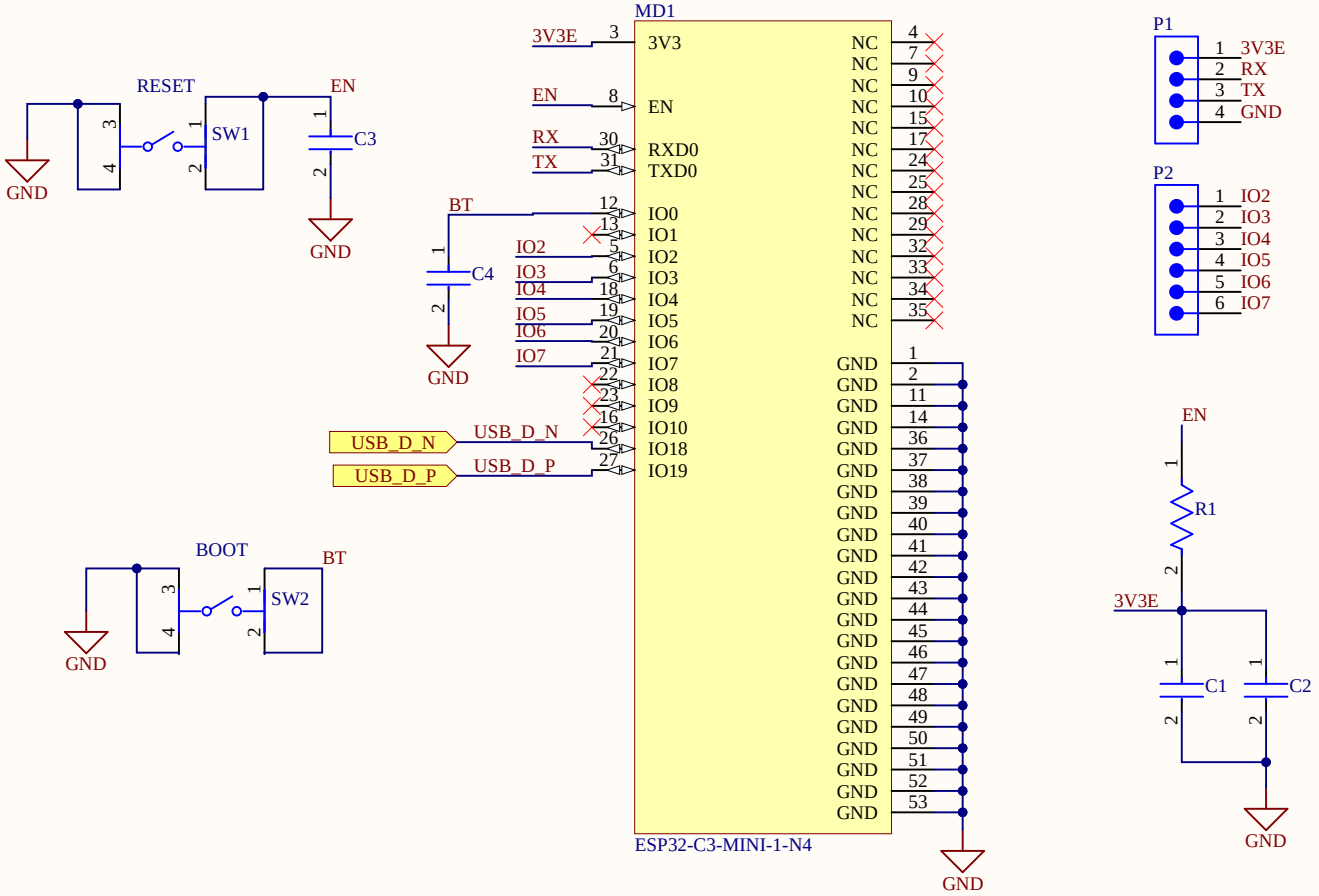

Title	ESP32 System	
Size A	Number	Revision
Date: 4/01/2026		Sheet of
File: C:\Users\..\ESP32-S3.SchDoc		Drawn By:

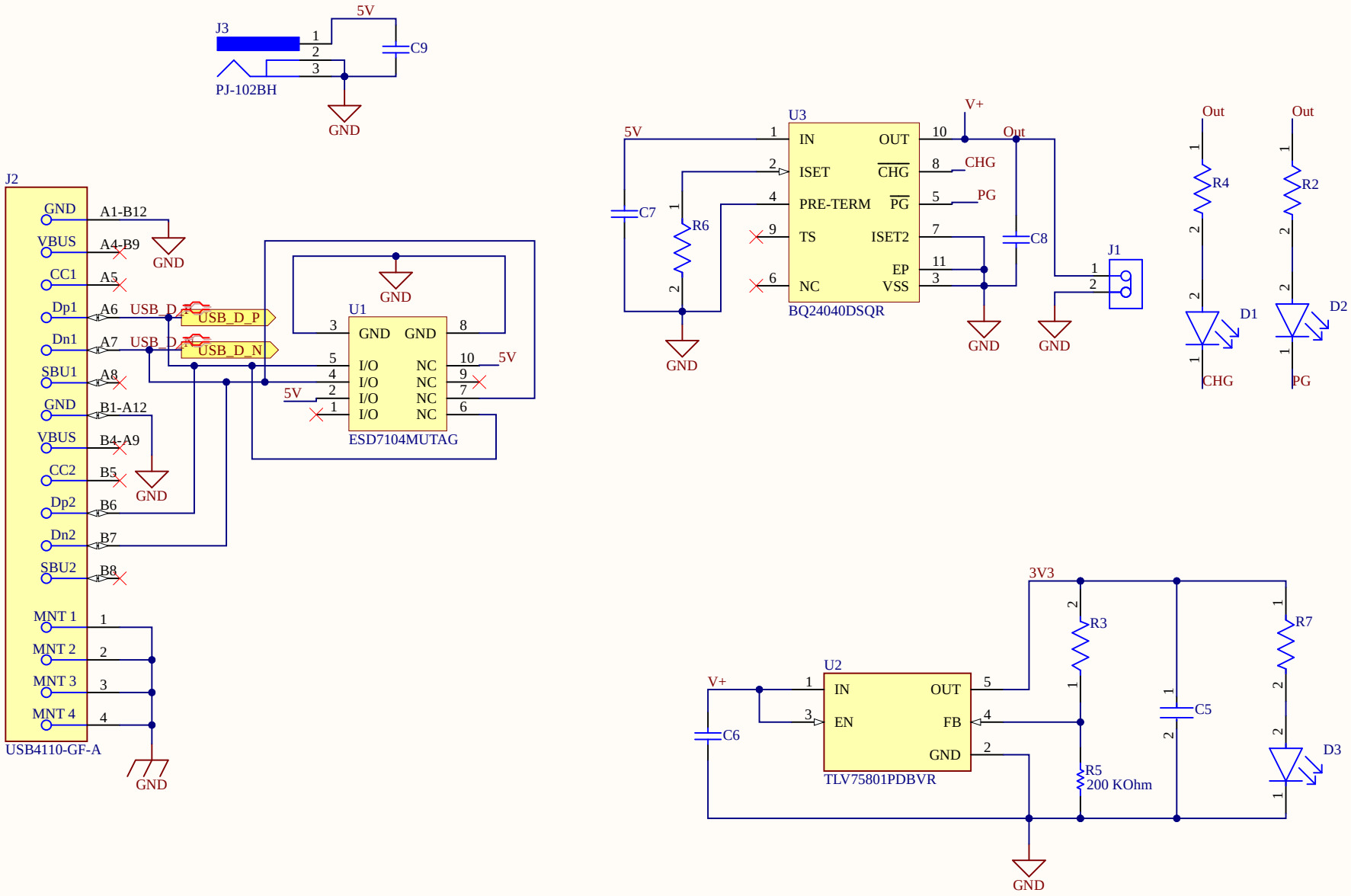

Title	ESP32 System		
Size A	Number		Revision
Date:	4/01/2026	Sheet of	
File:	C:\Users\..\REG.SchDoc	Drawn By:	

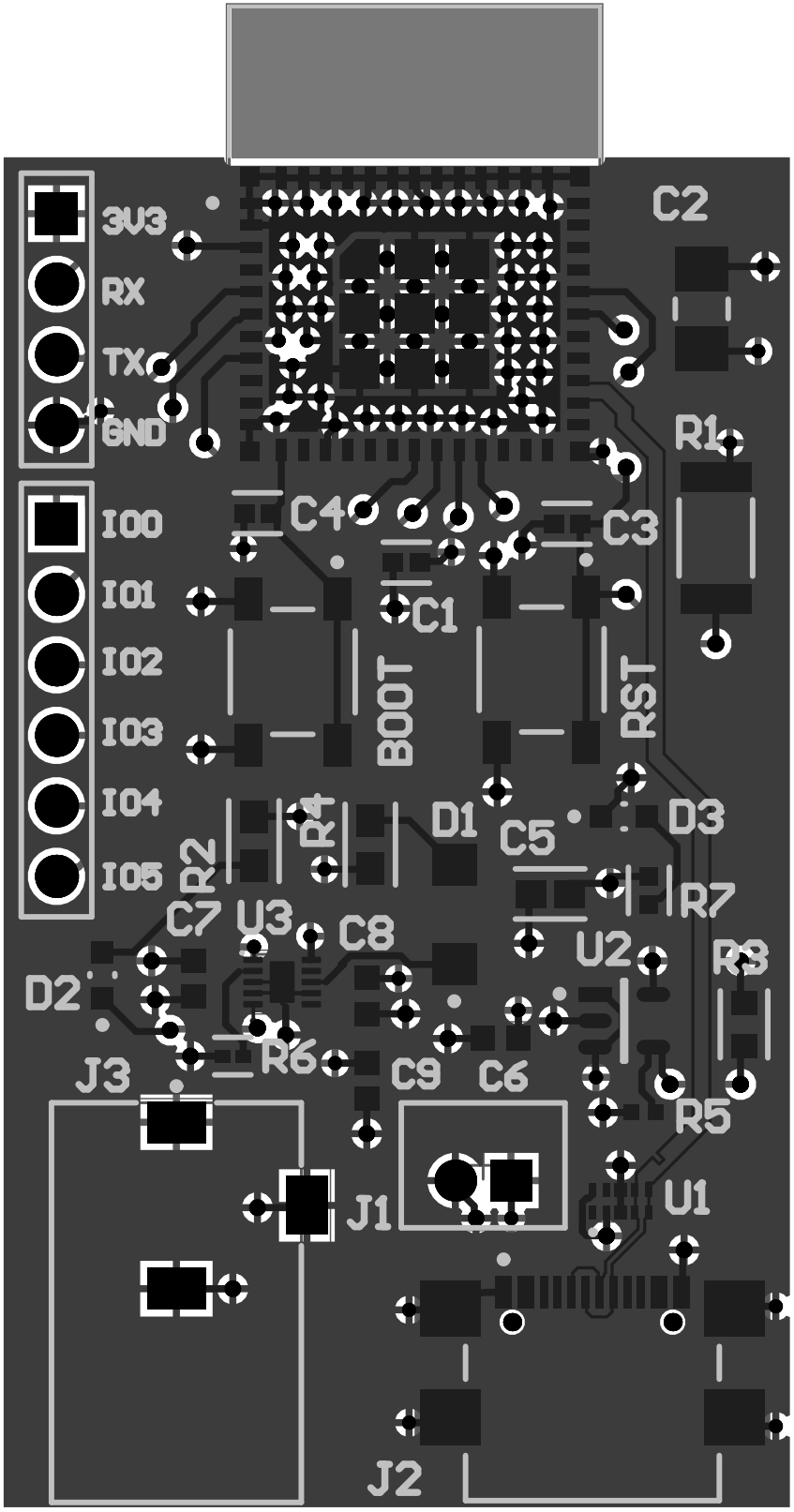
3V3
RX
TX
GND
IO0
IO1
IO2
IO3
IO4
IO5
C2
R1
C4
C3
C1
BOOT
RST
R4
D1
C5
D3
R2
R7
C7
U3
C8
U2
R3
D2
R6
C9
C6
J3
R5
J1
U1
J2

Board Stack Report