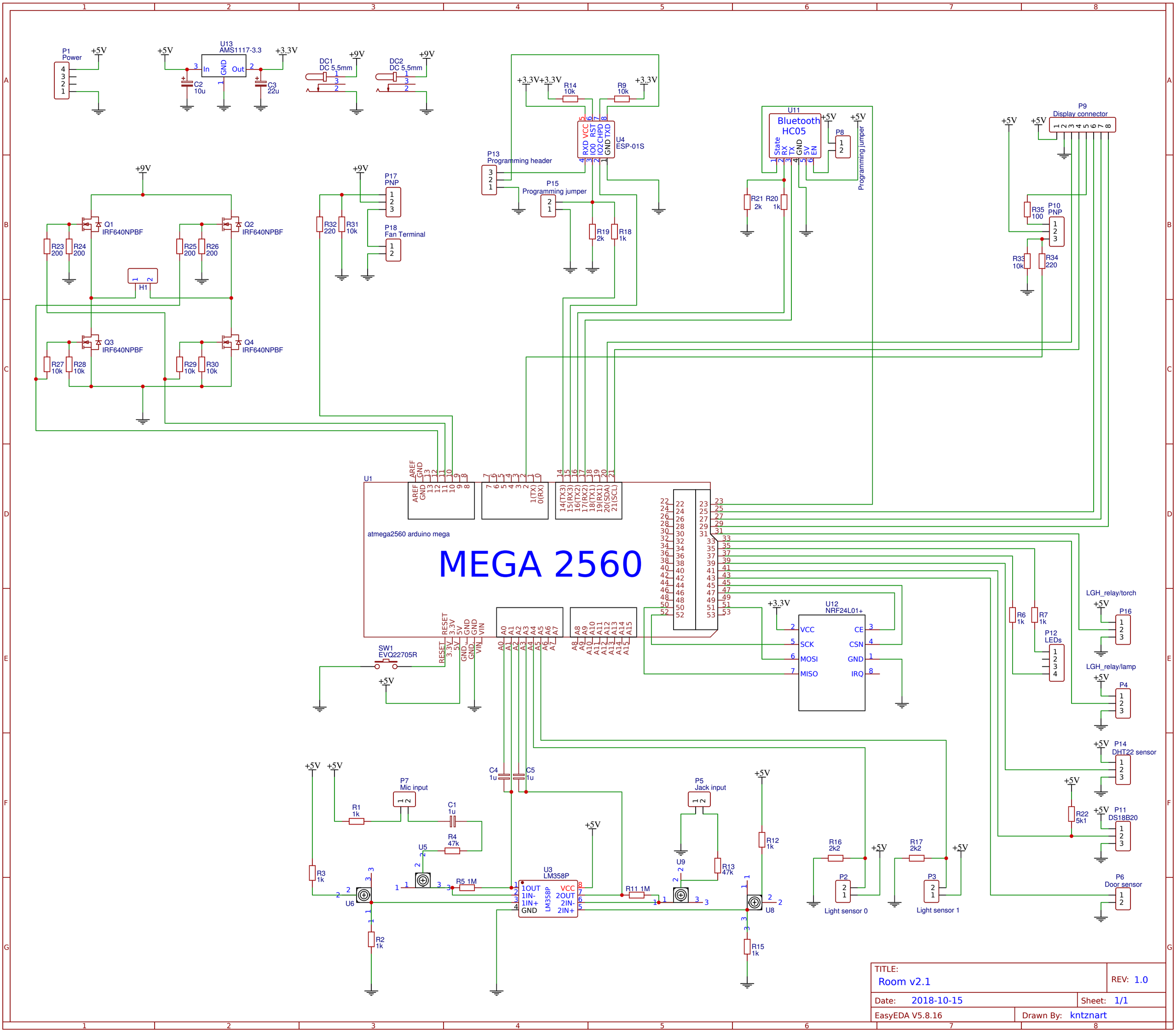
P1
Power
U13
AMS1117-3.3
In
GND
Out
C2
10u
C3
22u
DC1
DC 5.5mm
DC2
DC 5.5mm
R14
10k
R9
10k
U4
ESP-01S
RXD VCC
IO0 RST
IO2 CHPD
GND TXD
P13
Programming header
P15
Programming jumper
R19
2k
R18
1k
U11
Bluetooth
HC05
State
RX
TX
GND
5V
EN
P8
Programming jumper
R21
2k
R20
1k
P9
Display connector
R35
100
P10
PNP
R33
10k
R34
220
Q1
IRF640NPBF
Q2
IRF640NPBF
Q3
IRF640NPBF
Q4
IRF640NPBF
R23
200
R24
200
R25
200
R26
200
H1
R27
10k
R28
10k
R29
10k
R30
10k
P17
PNP
R32
220
R31
10k
P18
Fan Terminal
U1
atmega2560 arduino mega
MEGA 2560
AREF
GND
13
12
11
10
9
8
7
6
5
4
3
2
1(TX)
0(RX)
14(TX3)
15(RX3)
16(TX2)
17(RX2)
18(TX1)
19(RX1)
20(SDA)
21(SCL)
RESET
3.3V
5V
GND
GND
VIN
A0
A1
A2
A3
A4
A5
A6
A7
A8
A9
A10
A11
A12
A13
A14
A15
SW1
EVQ22705R
U12
NRF24L01+
VCC
SCK
MOSI
MISO
CE
CSN
GND
IRQ
R6
1k
R7
1k
P12
LEDs
LGH_relay/torch
P16
LGH_relay/lamp
P4
P14
DHT22 sensor
R22
5k1
P11
DS18B20
P6
Door sensor
C4
1u
C5
1u
P7
Mic input
R1
1k
C1
1u
R4
47k
U5
R5 1M
U3
LM358P
1OUT
1IN-
1IN+
GND
VCC
2OUT
2IN-
2IN+
R11 1M
P5
Jack input
U9
R13
47k
R12
1k
U8
R15
1k
R3
1k
U6
R2
1k
R16
2k2
P2
Light sensor 0
R17
2k2
P3
Light sensor 1
TITLE:
Room v2.1
REV: 1.0
Date: 2018-10-15
Sheet: 1/1
EasyEDA V5.8.16
Drawn By: kntznart