Electromagnetism VI: Circuits

AC circuits are covered in chapter 8 of Purcell, or chapter 10 of Wang and Ricardo, volume 2. Transmission lines, filters, and resonant cavities are covered physically in chapters II-22 and II-23 of the Feynman lectures, which will also build intuition for the next unit. Also see Jaan Kalda's circuits handout, an excellent resource which covers nonlinear circuit elements and much more. This problem set assumes knowledge about linear differential equations covered in **M1** and **M4**, but you can review the relevant material in chapter 4 of Morin. If you'd like to learn much more about circuits, from the electrical engineering perspective, a nice book is *Foundations of Analog and Digital Electronic Circuits* by Agarwal and Lang. There is a total of **84** points.

1 DC RLC Circuits

Idea 1

AC circuits correspond to driven damped oscillators by the analogies

$$Q \leftrightarrow x, \quad I \leftrightarrow v, \quad \dot{I} \leftrightarrow a, \quad L \leftrightarrow m, \quad R \leftrightarrow b, \quad C \leftrightarrow 1/k, \quad V_0 \leftrightarrow F_0.$$

More precisely, Kirchoff's loop equation in an AC circuit immediately becomes Newton's second law for a driven damped oscillator upon making these replacements.

Example 1

Consider a circuit with a battery of emf $\mathcal{E}$, a resistor R, and an inductor L in series, with zero initial current. Find the current $I(t)$ and verify that energy is conserved.

Solution

Kirchoff's loop equation is

$$\mathcal{E} = L\frac{dI}{dt} + IR.$$

To solve for the current, we can separate and integrate, giving

$$\frac{dt}{L} = \frac{dI}{\mathcal{E} - IR}$$

which yields

$$I(t) = \frac{\mathcal{E}}{R}(1 - e^{-(R/L)t}).$$

At long times, the inductor has no effect, since the current stops changing. To verify energy conservation we multiply Kirchoff's loop equation by I, since power is emf times current,

$$I\mathcal{E} = LI\frac{dI}{dt} + I^2R.$$

The left-hand side is the power output by the battery, and the two terms on the right-hand side represent the rate of increase in energy $LI^2/2$ stored in the inductor, and the power dissipated in the resistor, so all power is accounted for.

Example 2

An ideal battery of voltage $\mathcal{E}$ is suddenly connected to an ideal capacitor. After a short time, the capacitor has energy U. How much energy has been released by the battery?

Solution

This is a variant of the two capacitor paradox, which has essentially the same solution. First let's consider how the capacitor is charged up over time. Naively, since there's no resistance or inductance, the current in the circuit instantly becomes infinite, then instantly shuts off. This isn't realistic: to understand what's actually going on, we have to account for nonideal features of the circuit, such as resistance or self-inductance. For example, if the resistance dominates (overdamping), the capacitor charges up monotonically, as in an RC circuit. If the inductance dominates (underdamping), the capacitor voltage oscillates about $\mathcal{E}$, until eventually settling down due to the resistance.

At the end, the total energy on the capacitor is

$$\int V_C \, dQ = C \int_0^{\mathcal{E}} V_C \, dV_C = \frac{1}{2} C \mathcal{E}^2 = \frac{1}{2} \mathcal{E} Q$$

where Q is the total charge. But the work done by the battery is

$$\int \mathcal{E} \, dQ = \mathcal{E} Q$$

so the battery has released energy $2U$. Evidently, half of it is lost, no matter how close to "ideal" the circuit is! If the tiny resistance dominates, it is lost to heat in the circuit. If there's no resistance, then it's lost to electromagnetic radiation emitted from the circuit, which provides an effective "radiation resistance". (And if we enclosed a superconducting circuit in a perfect cavity so that it can't radiate, then it would ideally perform LC oscillations forever, so it never settles down to the steady voltage described in the problem.)

In fact, this is just another example of the nonadiabatic processes you saw in **T1**. Instantly attaching a battery is the same kind of thing as instantly dropping a piston, and letting it bounce until it comes to a stop. Just like those nonadiabatic processes, attaching the battery in this way creates entropy; if the circuit and environment have temperature T, then

$$\Delta S = \frac{\Delta Q}{T} = \frac{\mathcal{E} Q}{2T}.$$

We can avoid wasting energy and producing entropy if we use an adjustable battery and gradually turn its voltage up, slowly enough so that the circuit is always near equilibrium. This is the electrical analogue of a smooth, adiabatic compression.

Remark

Suppose you wanted to account for the nonideal properties of a capacitor. In principle, the only way to get the answer exactly is to treat all the fields with Maxwell's equations and all the charges with Newton's laws. But we can often mimic nonideal effects by just adding resistors to the circuit. This has the benefit of staying within the "lumped element abstraction", where we can solve for everything with Kirchoff's laws, which are much simpler.

But where should we add the resistors? It depends on what nonideal effect we're trying to model. For example, if we want to account for the resistance of the wires, we should add a small resistance in series with the capacitor. But if instead the capacitor is slightly leaky, we should instead add a large resistance in parallel with the capacitor. If both effects are important, we should add both. And if radiation is the main way energy is lost, this can't be modeled like a simple resistor, because the amount of radiated power depends on the rate of change of the current, not the current itself. However, it can be modeled as a real, frequncy-dependent contribution to the impedance.

[3] **Problem 1** (Purcell 7.46)**.** We have found that in an LR circuit the current changes on the timescale L/R. In a large conducting body such as the metallic core of the Earth, the "circuit" is not easy to identify. Nevertheless, we can estimate the decay time. Suppose the current flows in a solid doughnut of square cross section, as shown, with conductivity σ.

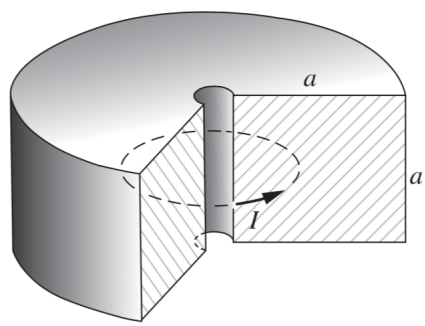

The current is spread out in some way over the cross section.

(a) Make a rough estimate of the resistance and inductance. For the latter, it may be easiest to estimate the magnetic field at the center of the donut first, then use that to estimate the total magnetic field energy.

(b) With these results, show that $\tau \sim \mu_0 a^2 \sigma$, which also follows from dimensional analysis.

(c) Given that the radius of the Earth is $r \sim 3000\,\text{km}$ and $\sigma \sim 10^6\,(\Omega \cdot \text{m})^{-1}$, estimate τ.

[2] **Problem 2** (PPP 171)**.** A circuit contains three identical lamps (modeled as resistors) and two identical inductors, as shown.

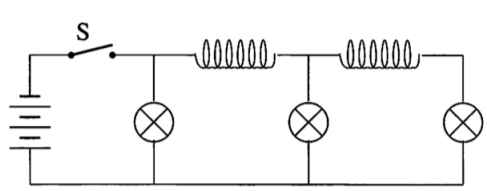

The switch S is closed for a long time, then suddenly opened. Immediately afterward, what are the relative brightnesses of the lamps?

[3] **Problem 3** (Kalda)**.** A capacitor C and resistor R are connected in series. Rectangular voltage pulses are applied, as shown below.

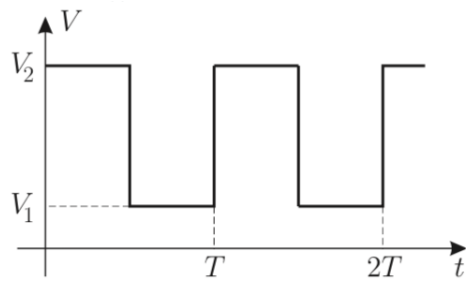

After a long time, find the average power dissipated on the resistor if (a) $T \gg RC$ and (b) $T \ll RC$.

Remark

Out of all the analogies mentioned above, why is capacitance defined "backwards", so that $C \sim 1/k$? I actually have no idea, but one possibility is that large quantities should intuitively correspond to large objects. An object has to be physically large (and thereby expensive) to have a high C or a high L, and you can easily see this on a circuit board. (Of course, this doesn't explain everything; the largest R you can get is just a break in the circuit, which is neither large nor expensive.)

Another difference in the analogies is that for circuits we usually measure $I(t)$, analogous to $v(t)$, while for mechanical oscillators we usually measure $x(t)$. The frequencies at which the amplitudes of $x(t)$ and $v(t)$ are maximized slightly differ, as discussed in **M4**, so there's a little ambiguity when people talk about "the" resonant frequency.

We now consider some problems involving mutual inductance.

Example 3: Griffiths 7.57

Two coils are wrapped around a cylindrical form so that the same flux passes through every turn of both coils, i.e. so that the mutual inductance is maximal. In practice this is achieved by inserting an iron core through the cylinder, which has the effect of forcing the magnetic flux to stay inside the cylinder.

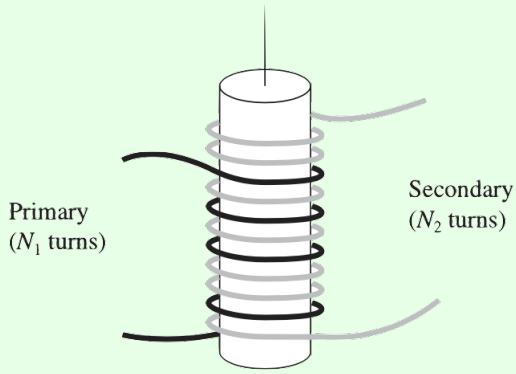

The "primary" coil has N_1 turns and the secondary has N_2. If the current I in the primary is changing, show that the emf $\mathcal{E}_2$ in the secondary obeys

$$\frac{\mathcal{E}_2}{\mathcal{E}_1} = \frac{N_2}{N_1}$$

where $\mathcal{E}_1$ is the (back) emf of the primary.

Solution

Let Φ be the flux through a single loop of either coil due to the current in the primary. Then

$$\Phi_1 = N_1 \Phi, \quad \Phi_2 = N_2 \Phi.$$

By Faraday's law,

$$\mathcal{E}_1 = -N_1 \frac{d\Phi}{dt}, \quad \mathcal{E}_2 = -N_2 \frac{d\Phi}{dt}$$

which gives the desired result. This is a primitive transformer, a device for raising or lowering the emf of an alternating current source. By choosing the appropriate number of turns, any desired secondary emf can be obtained.

We can also solve this problem more formally using what we know about inductance, which will also tell us what happens when both currents are nonzero. The emfs obey

$$\mathcal{E}_1 = -L_1 \frac{dI_1}{dt} - M \frac{dI_2}{dt}, \quad \mathcal{E}_2 = -L_2 \frac{dI_2}{dt} - M \frac{dI_1}{dt}.$$

We showed in **E5** that $L_i = \mu_0 N_i^2 \pi R^2 / H$ for a cylindrical solenoid. (Here, H stands for the length of the iron core, since this is the length over which the magnetic field exists.) As you'll show below, the maximum possible value of the mutual inductance, which is achieved by this ideal transformer, is $\sqrt{L_1 L_2}$. Plugging in these results gives

$$\mathcal{E}_1 = -\left(\frac{\mu_0 \pi R^2}{H}\right)\left(N_1^2 \frac{dI_1}{dt} + N_1 N_2 \frac{dI_2}{dt}\right), \quad \mathcal{E}_2 = -\left(\frac{\mu_0 \pi R^2}{H}\right)\left(N_2^2 \frac{dI_2}{dt} + N_1 N_2 \frac{dI_1}{dt}\right).$$

This tells us the desired result holds for any values of the dI_i/dt.

This result is not surprising from the standpoint of Faraday's law. The flux change through any cross-section of the iron core is the same, so the induced emf around any circle around it is the same. Thus, the emf per turn is the same between the coils, $\mathcal{E}_1/N_1 = \mathcal{E}_2/N_2$, which again gives the desired result.

[3] **Problem 4.** Consider two inductors L_i, with mutual inductance M.

(a) Show that if the inductors have currents I_i, the total stored energy is

$$U = \frac{1}{2}L_1 I_1^2 + \frac{1}{2}L_2 I_2^2 + M I_1 I_2.$$

Use this result to show that $|M| \leq \sqrt{L_1 L_2}$.

(b) Suppose these two inductors are in series. Find their combined effective inductance.

(c) Suppose these two inductors are in parallel. Find their combined effective inductance.

[3] **Problem 5** (Kalda)**.** An electrical transformer is connected as shown.

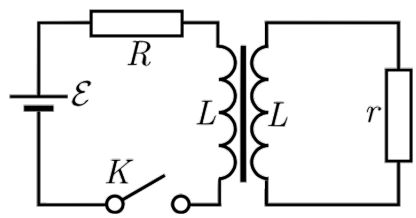

Both windings of the transformer have the same number of loops and the self-inductance of both coils is equal to L. There is no leakage of the magnetic field lines from the core, so that the mutual inductance is also equal to L.

(a) Find the current in both loops immediately after the switch is closed.

(b) Find the currents as a function of time.

2 AC RLC Circuits and Impedance

Idea 2: Impedance

Current and voltage can be promoted to complex quantities,

$$V(t) = V_0 \cos(\omega t + \phi), \quad \tilde{V}(t) = \tilde{V}_0 e^{i\omega t}, \quad \tilde{V}_0 = V_0 e^{i\phi}$$

where the physical quantity is the real part. This is useful because we can relate $\tilde{V}$ and $\tilde{I}$ in all cases by $\tilde{V} = \tilde{I} Z$ where Z is the impedance, and

$$Z_R = R, \quad Z_C = \frac{1}{i\omega C}, \quad Z_L = i\omega L$$

for the three common circuit elements. Impedance is extremely useful for finding the steady state response of a circuit. If you're interested in the transients, you can find them by applying the techniques of **M4** to the Kirchoff's loop rule equation.

Idea 3: Power

Turning parameters complex and taking the real part works because we're dealing with linear equations. As a result, it doesn't work for energy or power, which are quadratic.

For instance, the power is not simply the real part of $\tilde{I}\tilde{V}$, but rather

$$P = IV = \mathrm{Re}(\tilde{I})\,\mathrm{Re}(\tilde{V}) = I_0 V_0 \cos(\omega t)\cos(\omega t + \phi)$$

where ϕ is the phase angle of Z. To compute the average power, note that

$$P = \frac{V_0^2}{|Z|}\cos(\omega t)(\cos(\omega t)\cos(\phi) - \sin(\omega t)\sin(\phi)).$$

The second term averages to zero, while $\cos^2(\omega t)$ averages to $1/2$ as usual, so

$$\overline{P} = \frac{1}{2}\frac{V_0^2}{|Z|}\cos(\phi) = \frac{1}{2} I_0 V_0 \cos(\phi).$$

We can decompose a general impedance as $Z = R + iX$, in which case $\cos\phi = R/|Z|$, and

$$\overline{P} = \frac{1}{2}\frac{I_0 V_0 R}{|Z|} = \frac{1}{2} I_0^2 R.$$

It's conventional to define $I_{\mathrm{rms}}^2 = I_0^2/2$ to be the average value of I^2, giving

$$\overline{P} = I_{\mathrm{rms}}^2 R = \frac{V_{\mathrm{rms}}^2}{R}.$$

Example 4

Find the magnitude of the current through a series RLC circuit with AC voltage source $V_0 \cos\omega t$.

Solution

We promote the voltage and current to complex numbers,

$$V(t) = V_0 e^{i\omega t}.$$

Kirchoff's loop rule (subject to the caveats in **E5**) is

$$L\dot{I} + IR + \frac{Q}{C} = V_0 e^{i\omega t}.$$

This is quite similar to a damped driven harmonic oscillator, except that we want to get $I(t)$, rather than $Q(t)$. To get the steady state behavior, we guess

$$I(t) = I_0 e^{i\omega t}.$$

Then we have

$$\dot{I}(t) = (i\omega) I_0 e^{i\omega t}, \quad Q(t) = \frac{1}{i\omega} I_0 e^{i\omega t}.$$

Plugging this in, we find

$$\left(i\omega L + R + \frac{1}{i\omega C}\right) I_0 = V_0.$$

Solving for the magnitude of the current gives

$$|I_0| = \frac{|V_0|}{|i\omega L + R + 1/i\omega C|} = \frac{|V_0|}{\sqrt{R^2 + (\omega L - 1/\omega C)^2}}$$

which is maximized when $\omega = 1/\sqrt{LC}$, as we saw in **M4**. We could also have gotten straight to this last step by just using complex impedances.

Example 5

An imperfect voltage source consists of an ideal AC voltage source in series with an impedance Z_S. It is attached to a load of impedance Z_L. What value of Z_L maximizes the power transferred to the load?

Solution

Write the impedances as $Z_L = R_L + iX_L$. When the impedances are purely real, it's a familiar fact that the optimum is at $R_S = R_L$. We consider the case of general impedance here to illustrate how to work with power. First, the current has amplitude

$$I_0 = \frac{|V|}{|Z_S + Z_L|}.$$

The average power dissipated in the load is

$$\overline{P} = \frac{1}{2} I_0^2 R_L \propto \frac{R_L}{|Z_S + Z_L|^2} = \frac{R_L}{(R_S + R_L)^2 + (X_S + X_L)^2}.$$

The denominator is minimized when $X_S + X_L = 0$, so the optimal real part is $R_L = R_S$ by the same logic as the purely real case. Thus, the highest power is achieved for $Z_L = Z_S^*$.

[1] **Problem 6.** Consider the cube of resistances R, capacitances C, and inductances L shown below.

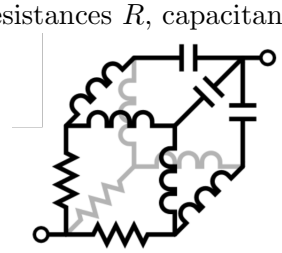

Compute the impedance between the terminals.

[3] **Problem 7.** Consider an RLC circuit with a driving $V(t) = V_0 e^{i\omega t}$.

(a) Suppose the resistor, inductor, and capacitor are connected in *parallel*. Sketch the current $|I_0|$ through the driver as a function of ω, and compare it to the result for a standard series RLC circuit. Can you give a qualitative explanation for the difference?

(b) As we saw in **M4**, the quality factor for an oscillator quantifies how fast the energy in an *undriven* oscillator decays away. Specifically,

$$Q = \frac{\text{average energy stored in the oscillator}}{\text{average energy dissipated per radian}}.$$

Find the quality factor for a series RLC circuit, and confirm your answer has correct dimensions.

(c) What is the condition for a series RLC circuit to be overdamped?

(d) Find the quality factor for a parallel RLC circuit. You should find that the quality factor increases as R is increased – why does this make sense?

Example 6: NBPhO 2018.7

Consider the following AC circuit.

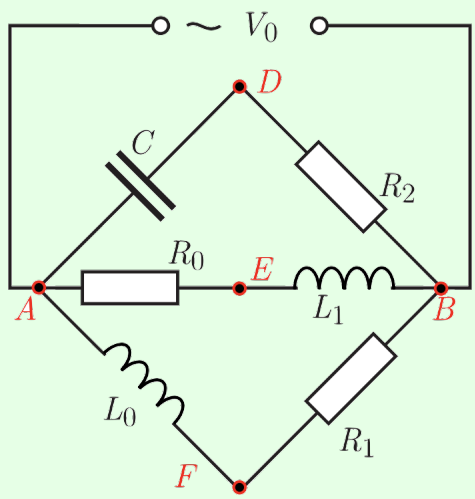

The voltage difference between D and E has amplitude $V_{DE} = 7\,\text{V}$. Similarly, $V_{DF} = 15\,\text{V}$ and $V_{\text{EF}} = 20\,\text{V}$. What is the magnitude of V_0?

Solution

Treat the voltages as phasors, and let $V_A = 0$, so $V_B = V_0$. Then V_{AF} is perpendicular to V_{FB}, which means that V_F lies on the circle centered at $V_0/2$ with radius $V_0/2$. The exact same logic applies for V_E and V_D. Therefore, we know that V_{DE}, V_{DF} and V_{EF} form the three sides of a triangle, where the desired answer is the diameter of its circumcircle.

For a triangle with side lengths a, b, and c, and a circumcircle of radius R, Heron's formula states that the area is

$$A = \sqrt{p(p-a)(p-b)(p-c)}, \quad p = \frac{1}{2}(a+b+c).$$

The area is also given by

$$A = \frac{abc}{4R}.$$

Solving for the diameter, we have

$$2R = \frac{abc}{2\sqrt{p(p-a)(p-b)(p-c)}} = 25\,\text{V}.$$

These geometric steps aren't that important; the key idea is thinking in terms of phasors.

[2] **Problem 8** (Purcell 8.26)**.** The four curves shown below are plots, in some order, of the applied voltage and the voltages across the resistor, inductor, and capacitor of a series RLC circuit.

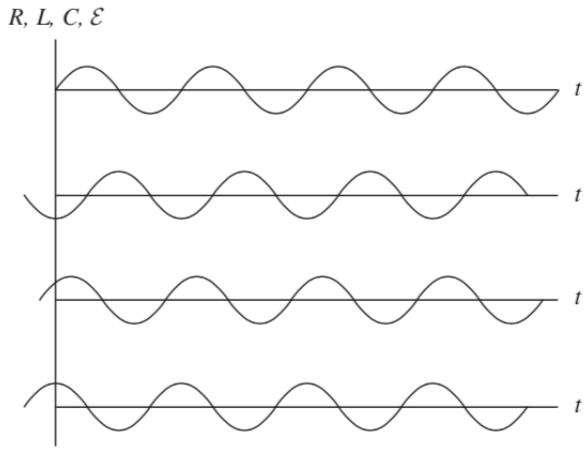

Which is which? Whose impedance is larger, the inductor's or the capacitor's?

[2] **Problem 9** (PPP 170)**.** Consider each of the following circuits.

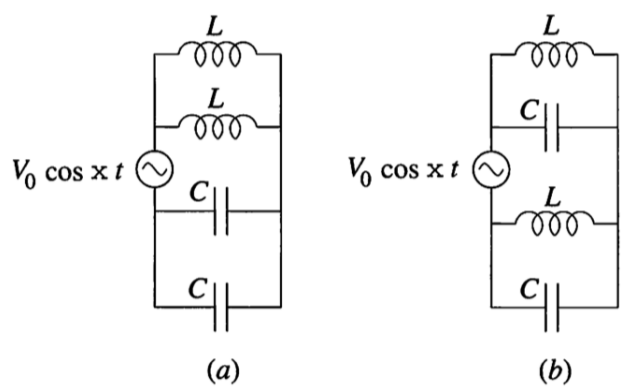

In each case, find the amplitude of the current drawn from the source as a function of ω/ω_0, where $\omega_0 = 1/\sqrt{LC}$.

[3] **Problem 10** (BAUPC)**.** Consider the following RLC circuit.

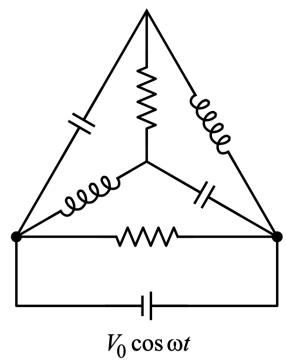

The capacitors have capacitance C, the inductors have inductance L, and the resistors have resistance $R = \sqrt{L/C}$. Furthermore, the driving angular frequency is $\omega = 1/\sqrt{LC}$. Find the amplitude of the total current through the circuit.

[3] **Problem 11.** USAPhO 2002, problem A1.

[3] **Problem 12.** USAPhO 2011, problem B1.

3 Electrical Engineering

These next problems are about using RLC circuits for practical purposes. They don't require anything not already introduced in the previous section, but they represent a different way of thinking that it's crucial to get comfortable with.

[2] **Problem 13** (Feynman)**.** In electronic circuits it is often desired to provide a sinusoidal voltage of constant amplitude but variable phase. A circuit which accomplishes this is called a phase-shifting network. One example is shown below.

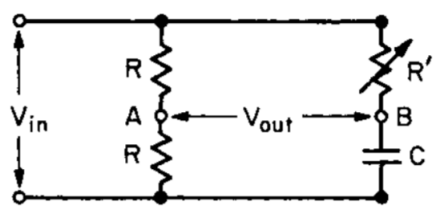

Show that the voltage measured between terminals A and B has half the amplitude of the input voltage, and a phase which may be adjusted by changing the resistance R'.

[3] **Problem 14** (Kalda)**.** The figure below shows a Maxwell's bridge, which is used for measuring the inductance L and resistance R of a coil.

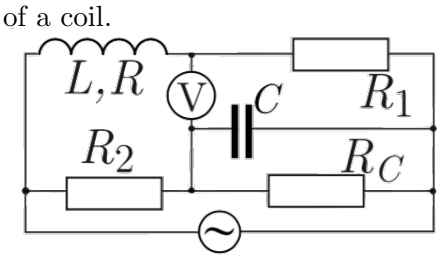

To do this, the angular frequency ω is fixed and the known parameters R_1, R_2, R_C, and C are adjusted until the voltmeter reads zero. Once this is done, find R and L in terms of the other parameters.

[5] **Problem 15.** An alternating voltage $V_0 \cos \omega t$ is applied to the terminals at A. The terminals at B are connected to an audio amplifier of very high input impedance. (That is, current flow into the amplifier is negligible.)

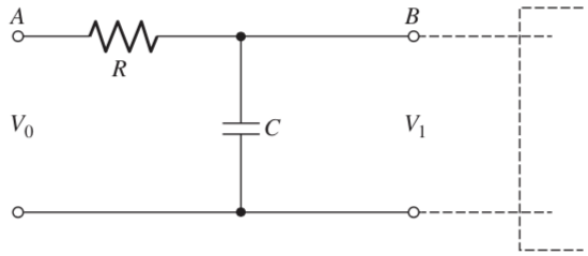

This circuit is the most primitive of "low-pass" filters.

(a) Calculate the "gain" ratio $|\tilde{V}_1|/V_0$ in this filter. Show that for sufficiently high frequencies, the signal power is reduced by a factor of 4 for every doubling of the frequency.

(b) Design a low-pass filter without using a capacitor.

(c) Design a high-pass filter.

(d) Design a stronger low-pass filter, i.e. one which reduces the signal power by a greater factor for every doubling of the frequency.

(e) Design a band-pass filter, which suppresses both low and high frequencies, but has a constant gain for a wide range of medium frequencies. (It's okay if the constant gain is less than 1, as we can just pass the output through an amplifier.)

(f) Design a notch filter, which suppresses a very small range of frequencies, while letting all other frequencies through.

[4] **Problem 16.** IPhO 1984, problem 3. A nice, short problem on filters.

[2] **Problem 17.** Consider the same setup as problem 15, but with the resistor and capacitor switched.

(a) Assuming that $V_1 \ll V_0$, show that the output voltage is proportional to the derivative of the input voltage. Hence the circuit is a differentiator. (Can you relate this to the kind of filtering such a setup does?)

(b) Design a circuit whose output is proportional to the integral of V_0, again assuming $V_1 \ll V_0$.

[3] **Problem 18.** A resonant cavity of the form illustrated below is an essential part of many microwave oscillators. It is a single piece of metal, which can be treated like an LC circuit.

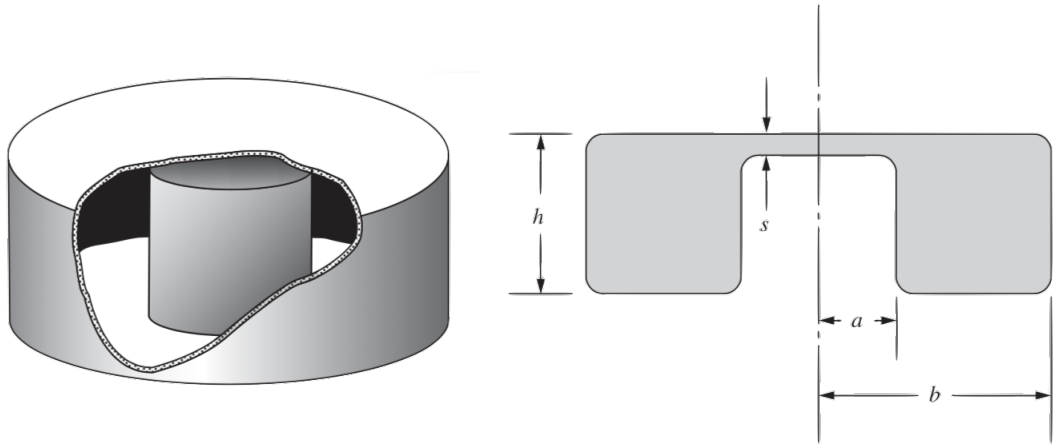

(a) Assuming that $s \ll a, b, h$, estimate the lowest resonant angular frequency of the cavity by treating it as an LC circuit. It may be helpful to sketch the magnetic and electric fields.

(b) One of the most common types of cavity is a cylindrical cavity, i.e. a hollow cylinder. (It corresponds to taking $s = h$ in the above setup.) Assuming that $h \approx b$, find a reasonable estimate of the lowest resonant angular frequency ω.

Remark

In **E3**, we saw that for DC circuits, any system of resistors and ideal batteries with two ports is equivalent, from the perspective of anything connected across the ports, to either a single resistor and ideal battery in series (the Thevenin equivalent), or a single resistor and ideal current source in parallel (the Norton equivalent). From the ideas covered in this problem set, we also know that any system of resistors, inductors, and capacitors with two ports is equivalent, at a fixed angular frequency ω, to a single lumped element with impedance Z_{eq}. This in turn could be constructed out of a single resistor and inductor or capacitor in series.

This naturally leads to a more general question: it is possible to construct a simple "equivalent" circuit that has exactly the same $Z_{\text{eq}}(\omega)$, for *all* ω? The answer is yes. For example, consider the simple case of a circuit of only inductors and capacitors. Here's the rough idea: in this case, the equivalent impedance is always a pure imaginary, rational function of ω, meaning a ratio of two polynomials in ω. But rational functions can always be expanded in partial fractions. Assuming no multiple roots for simplicity, each term in the partial fraction decomposition can be mimicked with an LC circuit, and we get the sum by placing these circuits in series.

In electrical engineering, the general task of constructing a circuit with a prescribed $Z(\omega)$ is called network synthesis; the above example is called Foster's synthesis. These techniques can be used to construct filters more elaborate than the ones you explored in problem 15.

Remark

Power companies often transmit electricity with "three-phase power". This means that there are three "hot" electrical lines, carrying voltages

$$V_1(t) = V_0 \cos(\omega t), \quad V_2(t) = V_0 \cos(\omega t + 2\pi/3), \quad V_3(t) = V_0 \cos(\omega t + 4\pi/3).$$

There are several advantages to three-phase power, but one is that it supplies a constant power, as $V_1^2 + V_2^2 + V_3^2$ is constant.

An ordinary American wall outlet has three holes. In these outlets, the smaller eye is the "hot" one, with voltage $V_1(t)$ where $V_0 = 120\,\mathrm{V}$, while the larger eye and the "mouth" are both grounded. Appliances are powered by the voltage difference between the eyes. Appliances that use significant power and have metal exteriors have three-prong plugs. Here, the mouth is connected directly to the exterior of the appliance, ensuring that it can't shock you, even if something goes wrong inside. If you live in an apartment building, you might also have special power outlets meant for very power-intensive appliances like dryers and heaters. In these outlets, one hole has voltage $V_1(t)$ and another has $V_2(t)$, giving an AC voltage difference of amplitude $\sqrt{3}\,V_0 = 208\,\mathrm{V}$.

4 Normal Modes

Idea 4

A circuit with n independent loops has n normal modes. If we ignore resistances, the normal modes are pure sinusoids, though in all real circuits they exponentially damp over time. Just as in mechanics, the general solution for the behavior of a driven circuit is a superposition of normal mode currents and the response to the driving.

There are many ways to find the normal mode frequencies.

- One way is to pick any two points not directly connected by wires. We may imagine that across these points we have attached a current source $\tilde{I}$ which is doing nothing, $\tilde{I} = 0$. If a normal mode is present at angular frequency ω, then we can have $\tilde{V} \neq 0$, even though $\tilde{I} = 0$ because current is merely sloshing around inside the circuit. Thus, the equivalent impedance $Z(\omega)$ between these points is infinite.

- Another way is to pick two points directly connected by wires. We may imagine this wire is actually a voltage source $\tilde{V}$ which is doing nothing, $\tilde{V} = 0$. If a normal mode is present at angular frequency ω, then we can have a current $\tilde{I} \neq 0$ through the wire even though $\tilde{V} = 0$, so the equivalent impedance $Z(\omega)$ between these points is zero.

- Some LC circuits can be mapped to sets of masses and springs using the analogies in idea 1, which can help with guessing the normal modes.

- Finally, one may simply write down all of Kirchoff's loop equations, plug in $e^{i\omega t}$ time dependence, and look for a solution. This boils down to solving a system of n equations, or equivalently evaluating the determinant of an $n \times n$ matrix. This is rarely the best approach on an Olympiad.

- Not every problem benefits from using normal modes; for relatively simple circuits with special initial conditions, it may be better to solve Kirchoff's loop equations directly.

Example 7: Kalda 89

Find the normal mode frequencies of the circuit below.

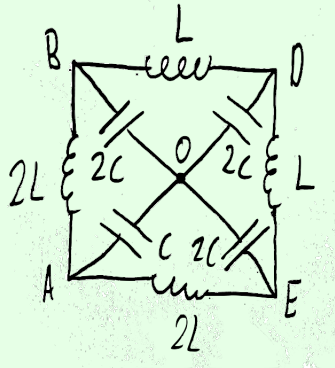

Solution

There are four independent Kirchoff's loop equations, so we expect four normal modes. One normal mode consists of current simply flowing uniformly along the outside, along the inductors. Since the capacitors aren't involved, this normal mode has $\omega_0 = 0$.

Now we apply the first technique listed above: we pick two points not directly connected with wires, and set the impedance to infinity. By symmetry, it's best to pick A and D. By symmetry, if any voltage is applied between A and D, the points B and E will be at the same voltage. Furthermore, this point will be at the same voltage as O, because the remaining circuit forms a balanced Wheatstone bridge, as introduced in **E3**. Identifying B, E, and O straightforwardly gives a simple LC circuit with $L_{\text{eff}} = (3/2)L$ and $C_{\text{eff}} = (2/3)C$, and resonant angular frequency $\omega_1 = 1/\sqrt{L_{\text{eff}}C_{\text{eff}}} = 1/\sqrt{LC}$.

This procedure only gave one of the three remaining normal modes, so we must have missed the other two because they have zero voltage difference between A and D. Therefore, to find the other two, we can join A and D, leading to the simpler equivalent circuit below.

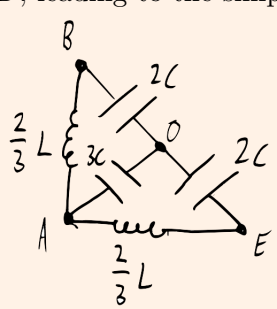

We now apply the same procedure between points B and E. This circuit is again a balanced Wheatstone bridge, so O and A are at the same voltage. We then have a simple LC circuit with $L_{\text{eff}} = (4/3)L$ and $C_{\text{eff}} = C$, giving $\omega_2 = \sqrt{3/4LC}$.

Again, we've missed a normal mode, so that remaining mode must have zero voltage difference between B and E. Joining them together leads to the final equivalent circuit below.

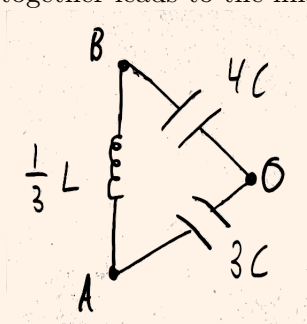

This is now a simple LC circuit with $L_{\text{eff}} = (1/3)L$ and $C_{\text{eff}} = (12/7)C$, giving the final resonant angular frequency $\omega_3 = \sqrt{7/4LC}$.

[2] **Problem 19** (Kalda)**.** Consider the LC circuit below.

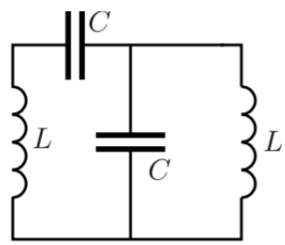

Show that the normal mode angular frequencies are $\omega = (\sqrt{5} \pm 1)/2\sqrt{LC}$.

[3] **Problem 20** (IPhO 2014)**.** Initially, the switch S is open in the circuit shown below.

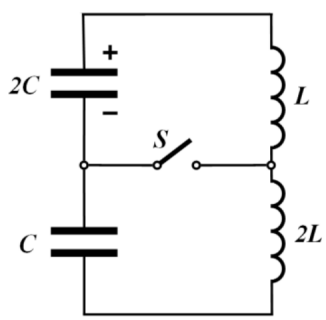

The capacitor with capacitance $2C$ is given a charge q_0, and immediately begins to discharge. At the moment when the current through the inductors reaches its maximum value, the switch S is closed. Find the maximum current through the switch thereafter.

[5] **Problem 21** (Physics Cup 2012)**.** Find the angular frequencies of the normal modes of the circuit below, where $C_1 \ll C_2$ and $L_1 \ll L_2$.

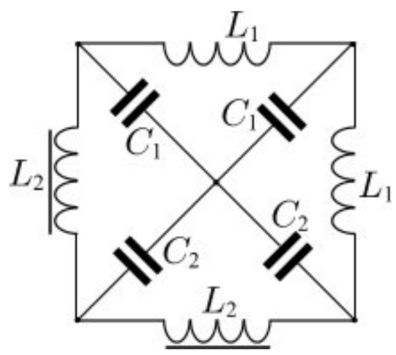

You may give all of your answers to lowest order in C_1/C_2 and L_1/L_2.

5 Nonlinear Circuit Elements

In this section we'll introduce nonlinear circuit elements, focusing on diodes. More exotic circuit elements will be covered in **E7**.

Idea 5

Many nonlinear circuit elements can be described by a current-voltage characteristic $I(V)$. Such circuit elements have trivial time dependence, just like resistors, and working with them basically amounts to using Kirchoff's laws as usual, plugging in $I(V)$ where necessary.

Since the implementation details of such elements can be very complicated, and many draw power from external sources, it generally isn't productive to think of them "physically"; they are more like miniature computers than physical objects. One just has to take $I(V)$ as given and work directly with it. Some simple examples are:

- An ideal diode acts like a wire in one direction and a break in the other, so it has

$$I(V) = \begin{cases} \infty & V > 0, \\ 0 & V < 0. \end{cases}$$

- Sometimes one instead takes the $I(V)$ characteristic

$$I(V) = \begin{cases} \infty & V > V_0, \\ 0 & V < V_0 \end{cases}$$

  which means that it "costs" voltage V_0 to go through the diode in the forward direction. More realistically, $I(V)$ smoothly increases when V passes V_0, but you don't often see this in Olympiad problems because it makes the math very messy.

- Zener diodes are bidirectional diodes. An ideal Zener diode has

$$I(V) = \begin{cases} \infty & V > V_0, \\ 0 & -V_0 < V < V_0, \\ -\infty & V < -V_0. \end{cases}$$

- Many familiar objects such as fuses (wires which break when I passes a threshold) and spark gaps (breaks that conduct when V passes a threshold) can be thought of as nonlinear circuit elements in the same way.

Analytically, these three cases are easily handled by casework. For instance, a diode acts just like a wire for positive V, and just like a break for negative V. In each case, the circuit is no more complicated than an ordinary one with linear circuit elements. Then you put the cases together to get the full behavior.

Example 8

A capacitor of capacitance C is charged so that its voltage is V_c. The capacitor is placed in series with a resistor R and a diode with $I(V)$ characteristic

$$I(V) = \begin{cases} \infty & V > V_0, \\ 0 & V < V_0. \end{cases}$$

The diode is oriented so that the initial voltage across it is positive. How does the voltage across the capacitor change over time?

Solution

If $V_c < V_0$, the voltage on the capacitor is not enough to get current to flow through the diode, so nothing happens. If $V_c > V_0$, current flows, at the cost of a voltage drop V_0 across the diode. Then we can simply replace the diode with a battery of emf V_0 oriented in the opposite direction. This system is equivalent to an ordinary RC circuit with battery, with the capacitor initially charged to higher than V_0. The extra voltage exponentially decays,

$$V(t) = (V_c - V_0)e^{-t/RC} + V_0$$

so that in the limit $t \to \infty$, the capacitor voltage approaches V_0 and the current stops.

Idea 6

It is difficult to solve a nonlinear circuit analytically if $I(V)$ is not very simple. In these cases:

- One can find the answer graphically as the intersection of $I(V)$ and another curve.
- One can solve for the answer iteratively on a calculator.
- If V stays within a narrow range, one can take a linear approximation to $I(V)$. This effectively replaces the element with a battery in series with a resistor, so the problem can be solved just like those in **E3**.

[2] **Problem 22** (Kalda)**.** Find the current in the circuit given below.

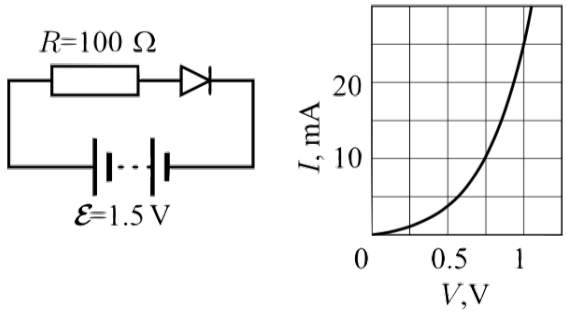

The nonlinear element is a diode with the $I(V)$ characteristic shown.

Idea 7

The power delivered to any circuit element is still $P = IV$. However, some nonlinear circuit elements can be active, providing net power to the circuit, like batteries.

Example 9: Kalda 64

The circuit below containing an ideal diode makes it possible to charge a rechargeable battery of voltage $\mathcal{E} = 12\,\mathrm{V}$ with a direct voltage source of a voltage $V_0 = 5\,\mathrm{V} < \mathcal{E}$.

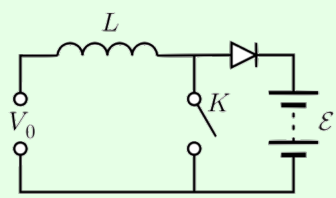

To do this, the switch K is periodically opened and closed, with the opened and closed periods having equal length $\tau = 10\,\mathrm{ms}$. Find the average charging current assuming $L = 1\,\mathrm{H}$.

Solution

The intuition here is that, using an inductor and a switch, one can generate emfs larger than what we put in, because the current wants to keep flowing through the inductor when the switch is opened; this allows us to get enough emf to charge the battery. This idea is also used in the ignition coils of old-fashioned cars, where a voltage large enough to ionize air is produced, making a spark and starting the engine. There's also a fluid analogue, called the hydraulic ram, used to raise water. The point of the diode here is just to keep current from flowing the other way during the other half of the cycle.

When the switch is closed, no current can flow through the battery, and the current through the inductor builds up linearly, since there is an emf V_0 across the inductor. When the switch is opened, the emf across the inductor is $V_0 - \mathcal{E} = -7\,\mathrm{V}$, causing its current to decrease while simultaneously charging the battery. After a time $(5/7)\tau$ with the switch open, the current through the inductor falls to zero, and the diode causes current to stop flowing.

Quantitatively, while the switch is closed, the current through the inductor builds up to $V_0\tau/L$. When the switch is open, current flows for a time $(5/7)\tau$, linearly falling to zero, so the total charge is

$$Q = \frac{1}{2}\frac{V_0\tau}{L}\frac{5}{7}\tau.$$

A cycle takes time 2τ, so

$$\overline{I} = \frac{Q}{2\tau} = \frac{5}{28}\frac{V_0\tau}{L} = 8.9\,\text{mA}.$$

By the way, your phone and laptop chargers probably have rectangular bricks containing a switched-mode power supply. This consists of one part that converts the AC wall power to DC, and a second part similar to the circuit above, but set up to output a *lower* DC voltage. You could also use a transformer to lower the AC voltage, but a switch-mode power supply is more space-efficient, and it easily copes with a range of input AC voltages and frequencies.

[3] **Problem 23.** EFPhO 2010, problem 9.

[3] **Problem 24** (Kalda)**.** An alternating voltage $V = V_0\cos(2\pi\nu t)$ is applied to the leads of the circuit shown below. Treat the diode as ideal.

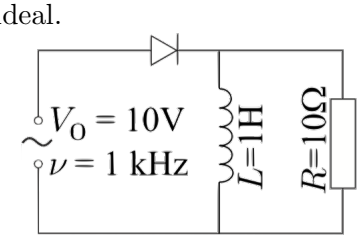

Assuming the current in the inductor begins at zero, what is the average current through the inductor at late times?

[3] **Problem 25.** EFPhO 2008, problem 6.

[3] **Problem 26.** EFPhO 2013, problem 8. This one has a nice mechanical analogy.

[3] **Problem 27.** IPhO 2001, problem 1c.

[3] **Problem 28.** USAPhO 2018, problem A2.

[4] **Problem 29.** EuPhO 2022, problem 2. A nice application of casework.