Karolina Obiedzińska

Indeks: 273034

Karolina Pastuszka

Indeks: 272888

Prowadzący zajęcia:

dr inż. Paweł Głuchowski

Etap 2 : Diagramy czynności dla scenariuszy przypadków użycia.

SYSTEM ALARMOWY

ZAD. 1 Diagram komponentów

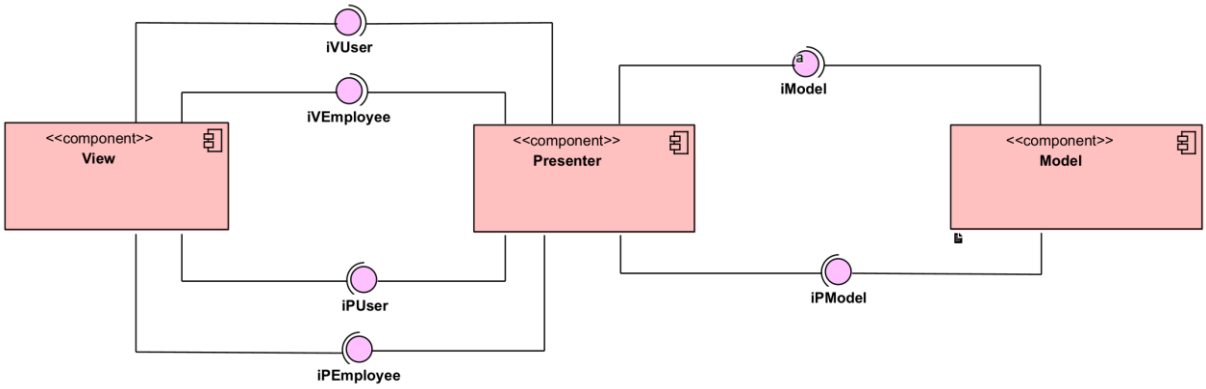

ZAD. 2 Diagram klas - Prezenter

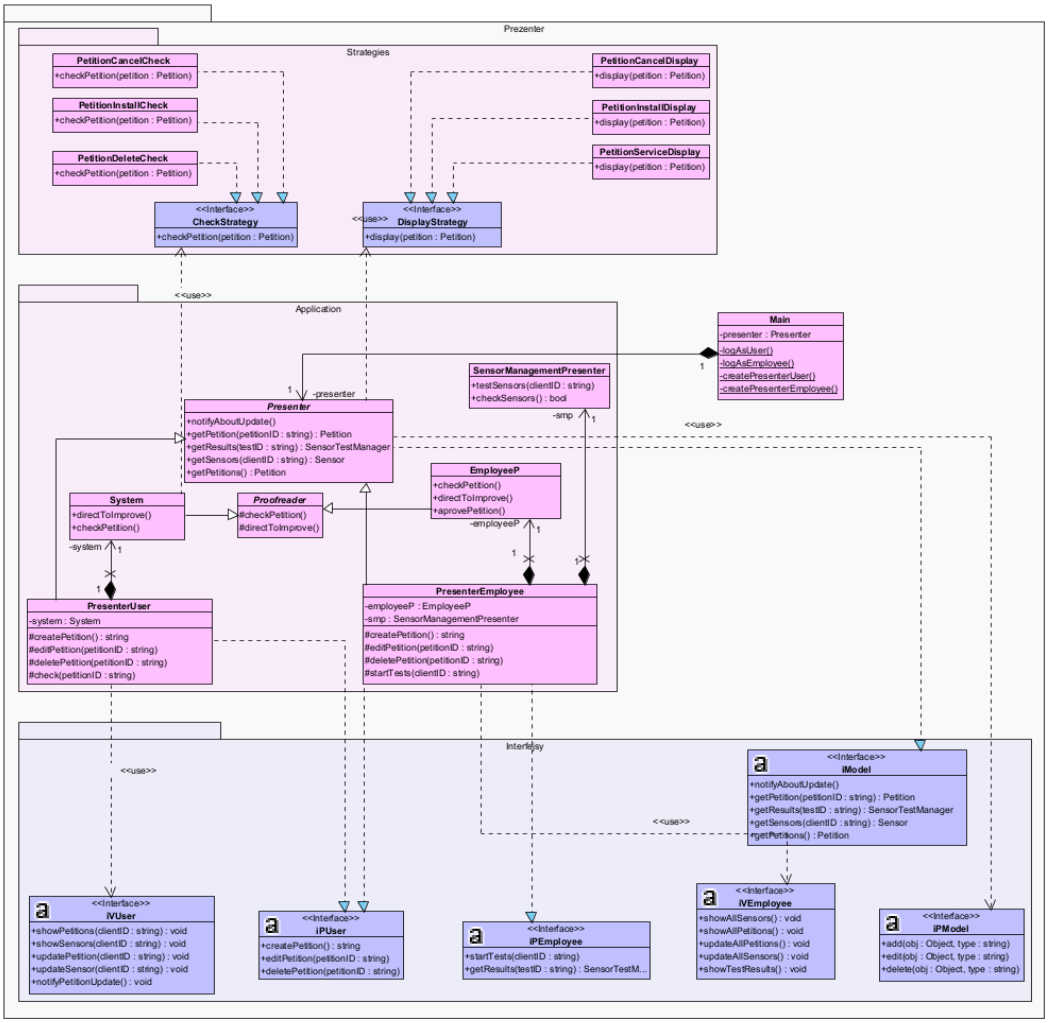

ZAD. 3 Diagram klas - Model

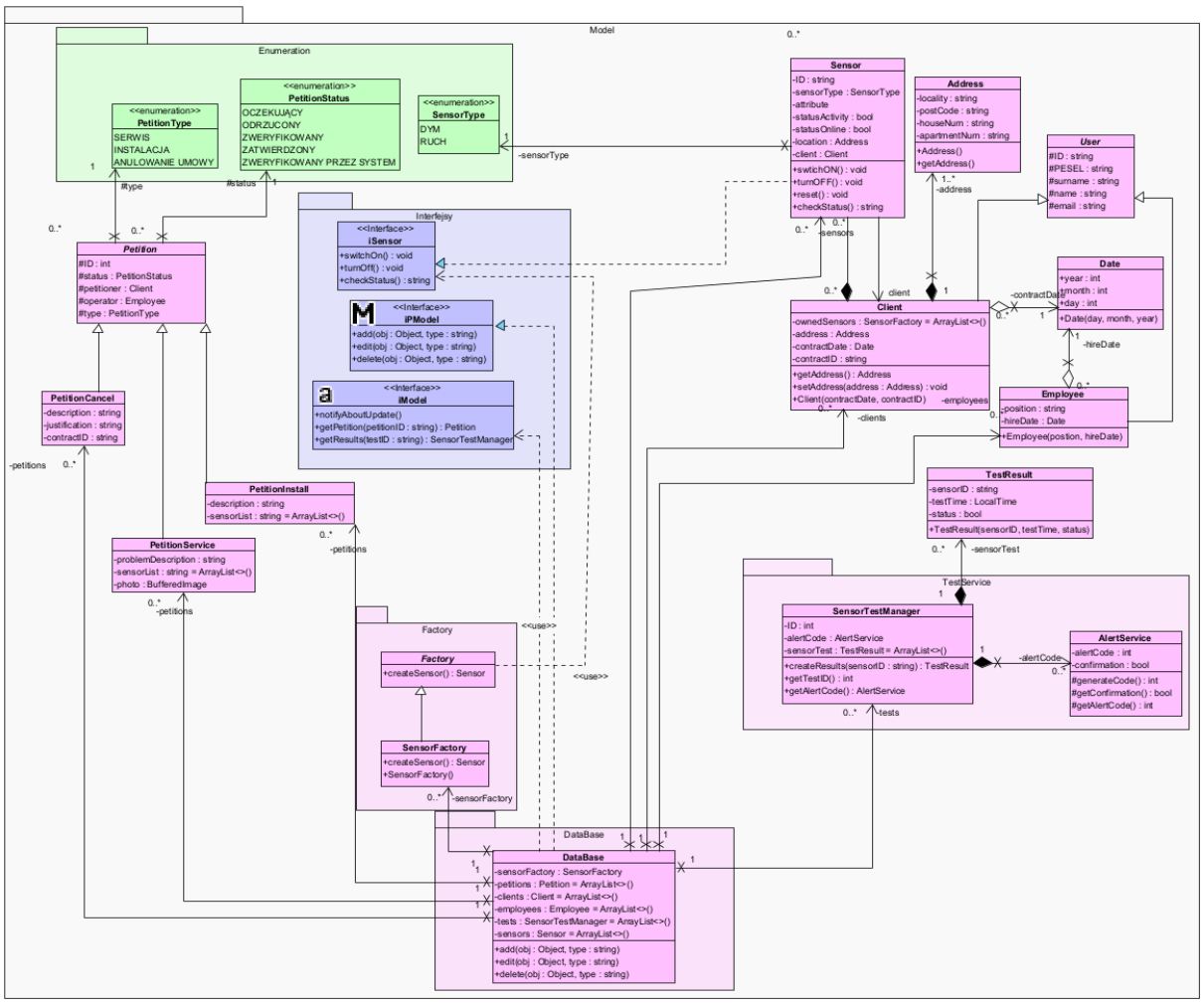

ZAD. 4 Diagram klas - Widok

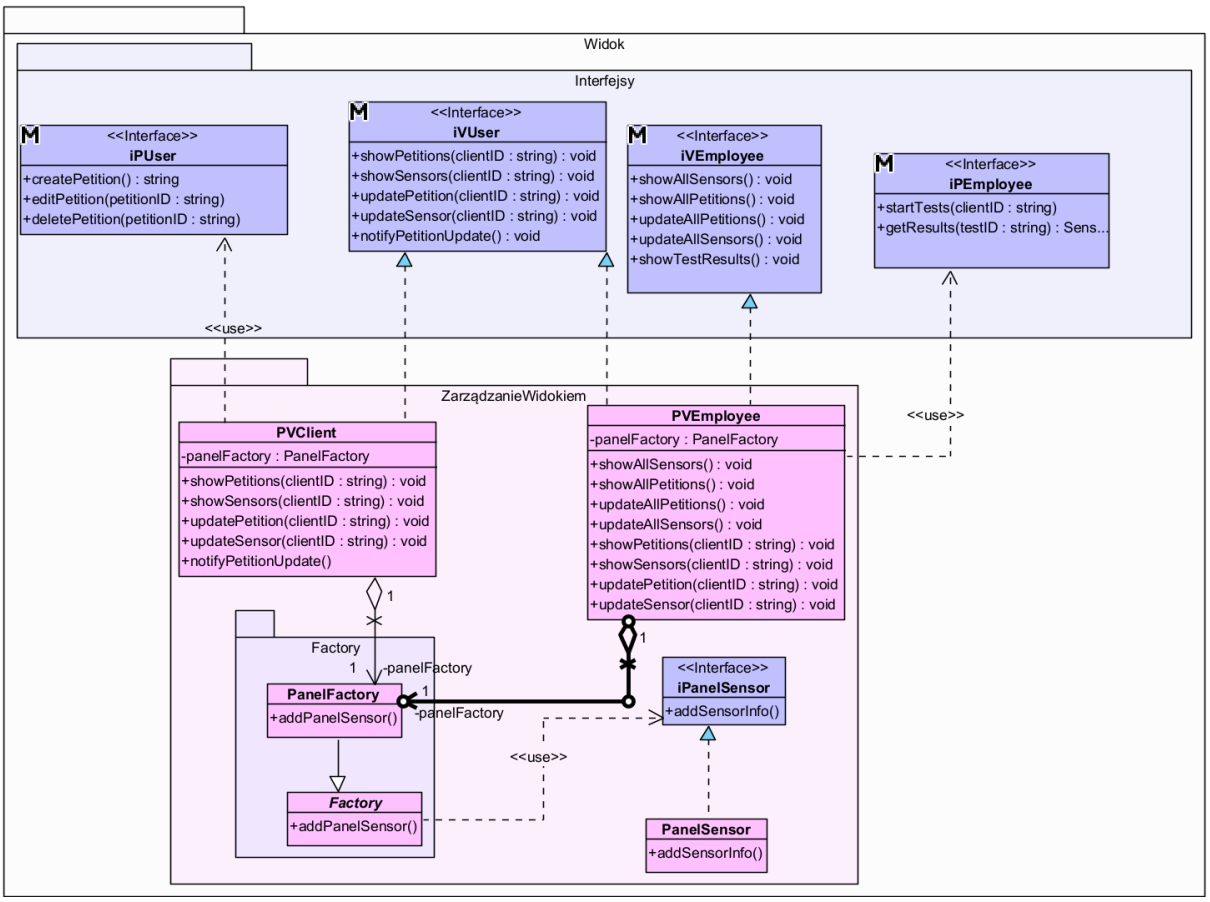
Widok
Interfejsy
<<Interface>>
iPUser
+createPetition() : string
+editPetition(petitionID : string)
+deletePetition(petitionID : string)
<<Interface>>
iVUser
+showPetitions(clientID : string) : void
+showSensors(clientID : string) : void
+updatePetition(clientID : string) : void
+updateSensor(clientID : string) : void
+notifyPetitionUpdate() : void
<<Interface>>
iVEmployee
+showAllSensors() : void
+showAllPetitions() : void
+updateAllPetitions() : void
+updateAllSensors() : void
+showTestResults() : void
<<Interface>>
iPEmployee
+startTests(clientID : string)
+getResults(testID : string) : Sens...
<<use>>
ZarządzanieWidokiem
PVClient
-panelFactory : PanelFactory
+showPetitions(clientID : string) : void
+showSensors(clientID : string) : void
+updatePetition(clientID : string) : void
+updateSensor(clientID : string) : void
+notifyPetitionUpdate()
PVEmployee
-panelFactory : PanelFactory
+showAllSensors() : void
+showAllPetitions() : void
+updateAllPetitions() : void
+updateAllSensors() : void
+showPetitions(clientID : string) : void
+showSensors(clientID : string) : void
+updatePetition(clientID : string) : void
+updateSensor(clientID : string) : void
<<use>>
1
Factory
1
-panelFactory
PanelFactory
+addPanelSensor()
1
-panelFactory
1
<<Interface>>
iPanelSensor
+addSensorInfo()
<<use>>
Factory
+addPanelSensor()
PanelSensor
+addSensorInfo()

ZAD. 5

New Folder 〉 Prezenter 〉 Main

Project

- DataBase
  - DataBase
- Enumeration
  - PetitionStatus
  - PetitionType
  - SensorType
- Factory
  - Factory
  - SensorFactory
- Interfejsy
  - iModel
  - iPModel
  - iSensor
- TestService
- Address
- Client
- Date
- Employee
- Petition
- PetitionCancel
- PetitionInstall
- PetitionService
- Sensor
- TestResult
- User
- out
- Prezenter
  - Application
    - EmployeeP
    - Presenter
    - PresenterEmployee
    - PresenterUser
    - Proofreader
    - SensorManagementPresenter
    - SystemChecker
  - Strategies
    - CheckStrategy
    - DisplayStrategy

Main.java | PresenterEmployee.java | Proofreader.java | Presenter.java | Peti

```java
package Prezenter;

import Prezenter.Application.*;

public class Main {

    public static void main(String[] args){
        logAsUser();
        PresenterUser client = new PresenterUser();
        client.createPetition();
    }
    no usages
    private Presenter presenter;

    1 usage
    private static void logAsUser() {
        // TODO - implement Main.logAsUser
        System.out.println("Zalogowano się jako klient!");
        //throw new UnsupportedOperationException();
    }

    no usages
    private static void logAsEmployee() {
        // TODO - implement Main.logAsEmployee
        throw new UnsupportedOperationException();
    }

    no usages
    private static void createPresenterUser() {
        // TODO - implement Main.createPresenterUser
        throw new UnsupportedOperationException();
    }

    no usages
```

Run: Main

```
C:\Users\karol\.jdks\openjdk-20.0.1\bin\java.exe "-javaagent:C:\Program Files\JetBrains\IntelliJ IDEA 2023.1.1
Zalogowano się jako klient!
Stworzono wniosek!

Process finished with exit code 0
```