Click here for production status of specific part numbers.

MAX98357A/ MAX98357B

Tiny, Low-Cost, PCM Class D Amplifier with Class AB Performance

General Description

The MAX98357A/MAX98357B is an easy-to-use, low-cost, digital pulse-code modulation (PCM) input Class D amplifier that provides industry-leading Class AB audio performance with Class D efficiency. The digital audio interface automatically recognizes up to 35 different PCM and TDM clocking schemes which eliminates the need for I^{2}C programming. Operation is further simplified by eliminating the need for an external MCLK signal that is typically used for PCM communication. Simply supply power, LRCLK, BCLK, and digital audio to generate audio! Furthermore, a novel pinout allows customers to use the cost-effective WLP package with no need for expensive vias (refer to **Application Note 6643: Optimize Cost, Size, and Performance with MAX98357 WLP** for more information).

The digital audio interface is highly flexible with the MAX98357A supporting I^{2}S data and the MAX98357B supporting left-justified data. Both ICs support 8 channel time division multiplexed (TDM) data. The digital audio interface accepts specified sample rates between 8kHz and 96kHz for all supported data formats. The ICs can be configured to produce a left channel, right channel, or (left/2 + right/2) output from the stereo input data. The ICs operate using 16/24/32-bit data for I^{2}S and left-justified modes as well as 16-bit or 32-bit data using TDM mode. The ICs eliminate the need for the external MCLK signal that is typically used for PCM communication. This reduces EMI and possible board coupling issues in addition to reducing the size and pin count of the ICs.

The ICs also feature a very high wideband jitter tolerance (12ns typ) on BCLK and LRCLK to provide robust operation.

Active emissions-limiting, edge-rate limiting, and overshoot control circuitry greatly reduce EMI. A filterless spread-spectrum modulation scheme eliminates the need for output filtering found in traditional Class D devices and reduces the component count of the solution.

The ICs are available in 9-pin WLP (1.345mm x 1.435mm x 0.64mm) and 16-pin TQFN (3mm x 3mm x 0.75mm) packages and are specified over the -40°C to +85°C temperature range.

***Ordering Information* appears at end of data sheet.**

***Functional Diagram* appears at end of data sheet.**

Features

- Single-Supply Operation (2.5V to 5.5V)
- 3.2W Output Power into 4Ω at 5V
- 2.4mA Quiescent Current
- 92% Efficiency (R_L = 8Ω, P_{OUT} = 1W)
- 22.8μV_{RMS} Output Noise (A_V = 15dB)
- Low 0.013% THD+N at 1kHz
- No MCLK Required
- Sample Rates of 8kHz to 96kHz
- Supports Left, Right, or (Left/2 + Right/2) Output
- Sophisticated Edge Rate Control Enables Filterless Class D Outputs
- 77dB PSRR at 1kHz
- Low RF Susceptibility Rejects TDMA Noise from GSM Radios
- Extensive Click-and-Pop Reduction Circuitry
- Robust Short-Circuit and Thermal Protection
- Available in Space-Saving Packages: 1.345mm x 1.435mm WLP (0.4mm Pitch) and 3mm x 3mm TQFN
- Solution Size with Single Bypass Capacitor is 4.32mm^2

Applications

- Single Li-ion Cell/5V Devices
- Smart Speakers
- Notebook Computers
- IoT Devices
- Gaming Devices (Audio and Haptics)
- Smartphones
- Tablets
- Cameras

Simplified Block Diagram

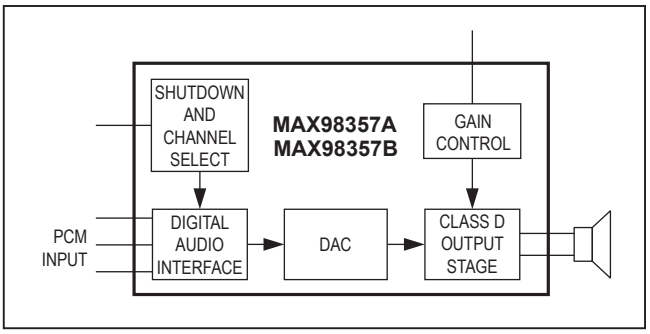

19-6779; Rev 13; 7/19

TABLE OF CONTENTS

General Description . . . 1
Features . . . 1
Applications . . . 1
Simplified Block Diagram . . . 1
Absolute Maximum Ratings . . . 4
Package Thermal Characteristics . . . 4
Electrical Characteristics . . . 4
Typical Operating Characteristics . . . 9
Pin Configurations . . . 15
Pin Description . . . 15
Detailed Description . . . 16
- Digital Audio Interface Modes . . . 16
  - MCLK Elimination . . . 16
  - BCLK Jitter Tolerance . . . 16
  - BCLK Polarity . . . 16
  - LRCLK Polarity . . . 16
  - Standby Mode . . . 16
- DAC Digital Filters . . . 17
- $\overline{\text{SD_MODE}}$ and Shutdown Operation . . . 17
  - Startup . . . 18
  - I^2S and Left Justified Mode . . . 19
  - TDM Mode . . . 19
- Class D Speaker Amplifier . . . 28
  - Ultra-Low EMI Filterless Output Stage . . . 28
  - Speaker Current Limit . . . 28
  - Gain Selection . . . 28
  - Click-and-Pop Suppression . . . 28

Applications Information . . . 29
- Filterless Class D Operation . . . 33
- Power-Supply Input . . . 33
- Layout and Grounding . . . 33

Functional Diagram . . . 33
- WLP Applications Information . . . 34

Ordering Information . . . 34
Package Information . . . 35
Revision History . . . 38

LIST OF FIGURES

Figure 1. I²S Audio Interface Timing Diagram (MAX98357A) . . . 8
Figure 2. Left-Justified Audio Interface Timing Diagram (MAX98357B) . . . 8
Figure 3. TDM Audio Interface Timing Diagram . . . 8
Figure 4. $\overline{\text{SD_MODE}}$ Resistor Connected Using Open-Drain Driver . . . 18
Figure 5. $\overline{\text{SD_MODE}}$ Resistor Connected Using Push-Pull Driver . . . 18
Figure 6. Required startup sequence when using BCLK = 256kHz . . . 19
Figure 7. MAX98357A I²S Digital Audio Interface Timing, 16-Bit Resolution . . . 20
Figure 8. MAX98357A I²S Digital Audio Interface Timing, 32-Bit Resolution . . . 21
Figure 9. MAX98357B Left-Justified Digital Audio Interface Timing, 16-Bit Resolution . . . 22
Figure 10. MAX98357B Left-Justified Digital Audio Interface Timing, 32-Bit Resolution . . . 23
Figure 11. MAX98357A TDM 16-Bit DAI Timing . . . 24
Figure 12. MAX98357A TDM 32-Bit DAI Timing . . . 25
Figure 13. MAX98357B TDM 16-Bit DAI Timing . . . 26
Figure 14. MAX98357B TDM 32-Bit DAI Timing . . . 27
Figure 15. EMI with 12in of Speaker Cable and No Output Filtering . . . 28
Figure 16. Left-Channel PCM Operation with 6dB Gain . . . 29
Figure 17. Left-Channel PCM Operation with 12dB Gain . . . 29
Figure 18. Right-Channel PCM Operation with 6dB Gain . . . 30
Figure 19. (Left/2 + Right/2) PCM Operation with 6dB Gain . . . 30
Figure 20. Stereo PCM Operation Using Two ICs . . . 31
Figure 21. Channel TDM Operation (Gain Fixed at 12dB) . . . 32
Figure 22. WLP Pin Connect for set 12dB Gain Without Via . . . 34
Figure 23. Example Layout Configured for Left-Channel Audio and Gain of 12dB . . . 34
Figure 24. MAX98357A/MAX98357B WLP Ball Dimensions . . . 34

LIST OF TABLES

Table 1. RMS Jitter Tolerance . . . 16
Table 2. BCLK Polarity . . . 16
Table 3. LRCLK Polarity . . . 16
Table 4. Digital Filter Settings . . . 17
Table 5. $\overline{\text{SD_MODE}}$ Control . . . 17
Table 6. Examples of $\overline{\text{SD_MODE}}$ Pullup Resistor Values . . . 17
Table 7. TDM Mode Channel Selection . . . 20
Table 8. Gain Selection . . . 28

Absolute Maximum Ratings

V_{DD}, LRCLK, BCLK, and DIN to GND.....-0.3V to +6V
All Other Pins to GND.....-0.3V to (V_{DD} + 0.3V)
Continuous Current In/Out of V_{DD}/GND/OUT_.....±1.6A
Continuous Input Current (all other pins).....±20mA
Duration of OUT_ Short Circuit to GND or V_{DD}.....Continuous
Duration of OUTP Short to OUTN.....Continuous

Continuous Power Dissipation (T_A = +70°C)
WLP (derate 13.7mW/°C above +70°C).....1096mW
TQFN (derate 20.8mW/°C above +70°C).....1666mW
Junction Temperature.....+150°C
Operating Temperature Range..... -40°C to +85°C
Storage Temperature Range..... -65°C to +150°C
Soldering Temperature (reflow).....+260°C
Lead Temperature (soldering, 10s, TQFN).....+300°C

Stresses beyond those listed under "Absolute Maximum Ratings" may cause permanent damage to the device. These are stress ratings only, and functional operation of the device at these or any other conditions beyond those indicated in the operational sections of the specifications is not implied. Exposure to absolute maximum rating conditions for extended periods may affect device reliability.

Package Thermal Characteristics (Note 1)

WLP
Junction-to-Ambient Thermal Resistance (θ_{JA}).....73°C/W
Junction-to-Case Thermal Resistance (θ_{JC}).....50°C/W

TQFN
Junction-to-Ambient Thermal Resistance (θ_{JA}).....48°C/W
Junction-to-Case Thermal Resistance (θ_{JC}).....7°C/W

Note 1: Package thermal resistances were obtained using the method described in JEDEC specification JESD51-7, using a four-layer board. For detailed information on package thermal considerations, refer to **www.maximintegrated.com/thermal-tutorial**.

Electrical Characteristics

(V_{DD} = 5V, V_{GND} = 0V, GAIN_SLOT = V_{DD}. BCLK = 3.072MHz, LRCLK = 48kHz, speaker loads (Z_{SPK}) connected between OUTP and OUTN, Z_{SPK} = ∞, T_A = T_{MIN} to T_{MAX}, unless otherwise noted. Typical values are at T_A = +25°C.) (Note 2)

PARAMETER	SYMBOL	CONDITIONS		MIN	TYP	MAX	UNITS
Supply Voltage Range	V_{DD}	Guaranteed by PSSR test		2.5		5.5	V
Undervoltage Lockout	UVLO			1.5	1.8	2.3	V
Quiescent Current	I_{DD}	T_A = +25°C			2.75	3.35	mA
		T_A = +25°C, V_{DD} = 3.7V			2.4	2.85	
Shutdown Current	$I_{\overline{SHDN}}$	$\overline{SD_MODE}$ = 0V, T_A = +25°C			0.6	2	µA
Standby Current	$I_{\overline{STNDBY}}$	$\overline{SD_MODE}$ = 1.8V, no BCLK, T_A = +25°C			340	400	µA
Turn-On Time	t_{ON}				7	7.5	ms
Output Offset Voltage	V_{OS}	T_A = +25°C, gain = 15dB			±0.3	±2.5	mV
Click-and-Pop Level	K_{CP}	Peak voltage, T_A = +25°C, A-weighted, 32 samples per second (Note 3)	Into shutdown		-72		dBV
			Out of shutdown		-66		
Power-Supply Rejection Ratio	PSRR	V_{DD} = 2.5V to 5.5V, T_A = +25°C		60	75		dB
		T_A = +25°C (Notes 3, 4)	f = 217Hz, 200mV_{P-P} ripple		77		
			f = 10kHz, 200mV_{P-P} ripple		60		

Electrical Characteristics (continued)

(V_{DD} = 5V, V_{GND} = 0V, GAIN_SLOT = V_{DD}. BCLK = 3.072MHz, LRCLK = 48kHz, speaker loads (Z_{SPK}) connected between OUTP and OUTN, Z_{SPK} = ∞, T_A = T_{MIN} to T_{MAX}, unless otherwise noted. Typical values are at T_A = +25°C.) (Note 2)

PARAMETER	SYMBOL	CONDITIONS		MIN	TYP	MAX	UNITS
Output Power (Note 3)	P_{OUT}	THD+N 10%, gain = 12dB	Z_{SPK} = 4Ω + 33µH		3.2		W
			Z_{SPK} = 8Ω + 68µH		1.8		
			Z_{SPK} = 8Ω + 68µH, V_{DD} = 3.7V		0.93		
		THD+N = 1%, gain = 12dB	Z_{SPK} = 4Ω + 33µH		2.5		
			Z_{SPK} = 8Ω + 68µH		1.4		
			Z_{SPK} = 8Ω + 68µH, V_{DD} = 3.7V		0.77		
Total Harmonic Distortion + Noise	THD+N	f = 1kHz, P_{OUT} = 1W, T_A = +25°C, Z_{SPK} = 4Ω + 33µH, WLP			0.02	0.06	%
		f = 1kHz, P_{OUT} = 1W, T_A = +25°C, Z_{SPK} = 4Ω + 33µH, TQFN			0.02		
		f = 1kHz, P_{OUT} = 0.5W, T_A = +25°C, Z_{SPK} = 8Ω + 68µH			0.013		
Dynamic Range	DR	A-weighted, Z_{SPK} = 8Ω + 33µH, V_{RMS} = 3.40V, 24- or 32-bit data			103.5		dB
Output Noise	V_N	A-weighted, 24- or 32-bit data (Note 4)			22.8		μV_{RMS}
Gain (Relative to a 2.1dBV Reference Level)	A_V	GAIN_SLOT = GND through 100kΩ		14.4	15	15.6	dB
		GAIN_SLOT = GND		11.4	12	12.6	
		GAIN_SLOT = unconnected		8.4	9	9.6	
		GAIN_SLOT = V_{DD}		5.4	6	6.6	
		GAIN_SLOT = V_{DD} through 100kΩ		2.4	3	3.6	
Current Limit	I_{LIM}				2.8		A
Efficiency	ε	Z_{SPK} = 8Ω + 68µH, THD+N = 10%, f = 1kHz, gain = 12dB			92		%
DAC Gain Error					1		%
Frequency Response				-0.2		+0.2	dB
Class D Switching Frequency	f_{OSC}				300		kHz
Spread-Spectrum Bandwidth					±20		kHz
DAC DIGITAL FILTERS							
VOICE MODE IIR LOWPASS FILTER (LRCLK < 30kHz)							
Passband Cutoff	f_{PLP}	Ripple limit cutoff		0.443 x f_S			Hz
		-3dB cutoff		0.446 x f_S			
Stopband Cutoff	f_{SLP}					0.464 x f_S	Hz
Stopband Attenuation		f > f_{SLP}		75			dB

Electrical Characteristics (continued)

(V_{DD} = 5V, V_{GND} = 0V, GAIN_SLOT = V_{DD}. BCLK = 3.072MHz, LRCLK = 48kHz, speaker loads (Z_{SPK}) connected between OUTP and OUTN, Z_{SPK} = ∞, T_A = T_{MIN} to T_{MAX}, unless otherwise noted. Typical values are at T_A = +25°C.) (Note 2)

PARAMETER	SYMBOL	CONDITIONS	MIN	TYP	MAX	UNITS
AUDIO MODE FIR LOWPASS FILTER (30kHz < LRCLK < 50kHz)						
Passband Cutoff	f_{PLP}	Ripple limit cutoff	0.43 x f_S			Hz
		-3dB cutoff	0.47 x f_S			
		-6.02dB cutoff	0.5 x f_S			
Stopband Cutoff	f_{SLP}				0.58 x f_S	Hz
Stopband Attenuation		f > f_{SLP}	60			dB
AUDIO MODE FIR LOWPASS FILTER (LRCLK > 50kHz)						
Passband Cutoff	f_{PLP}	Ripple limit cutoff	0.24 x f_S			Hz
		-3dB cutoff	0.31 x f_S			
Stopband Cutoff	f_{SLP}				0.477 x f_S	Hz
Stopband Attenuation		f < f_{SLP}	60			dB
DIGITAL AUDIO INTERFACE						
LRCLK Range 1	f_{S1}		7.6	8	8.4	kHz
LRCLK Range 2	f_{S2}		15.2	16	16.8	
LRCLK Range 3	f_{S3}		30.4	48	50.4	
LRCLK Range 4	f_{S4}		83.8	96	100.8	
Resolution		I^2S/left justified mode		16/24/32		Bits
		TDM mode		16/32		
BCLK Frequency Range	f_{BCLKH}	BCLK must be 32, 48, or 64X of LRCLK	0.2432		25.804	MHz
BCLK High Time	t_{BCLKH}		15			ns
BCLK Low Time	t_{BCLKL}		15			ns
Maximum Low Frequency BCLK and LRCLK Jitter		RMS jitter below 40kHz		0.5		ns
Maximum High Frequency BCLK and LRCLK Jitter		RMS jitter above 40kHz		12		
Input High Voltage	V_{IH}	Digital audio inputs	1.3			V

Electrical Characteristics (continued)

(V_{DD} = 5V, V_{GND} = 0V, GAIN_SLOT = V_{DD}. BCLK = 3.072MHz, LRCLK = 48kHz, speaker loads (Z_{SPK}) connected between OUTP and OUTN, Z_{SPK} = ∞, T_A = T_{MIN} to T_{MAX}, unless otherwise noted. Typical values are at T_A = +25°C.) (Note 2)

PARAMETER	SYMBOL	CONDITIONS	MIN	TYP	MAX	UNITS
Input Low Voltage	V_{IL}	Digital audio inputs			0.6	V
Input Leakage Current	I_{IH}, I_{IL}	V_{IN} = 0V, V_{DD} = 5.5V, T_A = +25°C	-1		+1	µA
Input Capacitance	C_{IN}			3		pF
DIN to BCLK Setup Time	t_{SETUP}		10			ns
LRCLK to BCLK Setup Time	$t_{SYNCSET}$		10			ns
DIN to BCLK Hold Time	t_{HOLD}		10			ns
LRCLK to BCLK Hold Time	$t_{SYNCHOLD}$		10			ns
$\overline{\text{SD_MODE}}$ COMPARATOR TRIP POINTS						
B0		See $\overline{\text{SD_MODE}}$ and shutdown operation for details	0.08	0.16	0.355	V
B1			0.65	0.77	0.825	
B2			1.245	1.4	1.5	
$\overline{\text{SD_MODE}}$ Pulldown Resistor	R_{PD}		92	100	108	kΩ
GAIN COMPARATOR TRIP POINTS						
	V_GAIN_SLOT	A_V = 3dB gain	0.65 x V_{DD}		0.85 x V_{DD}	V
		A_V = 6dB gain	0.9 x V_{DD}		V_{DD}	
		A_V = 9dB gain	0.4 x V_{DD}		0.6 x V_{DD}	
		A_V = 12dB gain	0		0.1 x V_{DD}	
		A_V = 15dB gain	0.15 x V_{DD}		0.35 x V_{DD}	

Note 2: 100% production tested at T_A = +25°C. Specifications over temperature limits are guaranteed by design.
Note 3: Class D amplifier testing performed with a resistive load in series with an inductor to simulate an actual speaker load. For R_L = 8Ω, L_L = 68µH. For R_L = 4Ω, L_L = 33µH.
Note 4: Digital silence used for input signal.
Note 5: Dynamic range measured using the EIAJ method. -60dBFS 1kHz output signal, A-weighted, and normalized to 0dBFS. f = 20Hz to 20kHz.