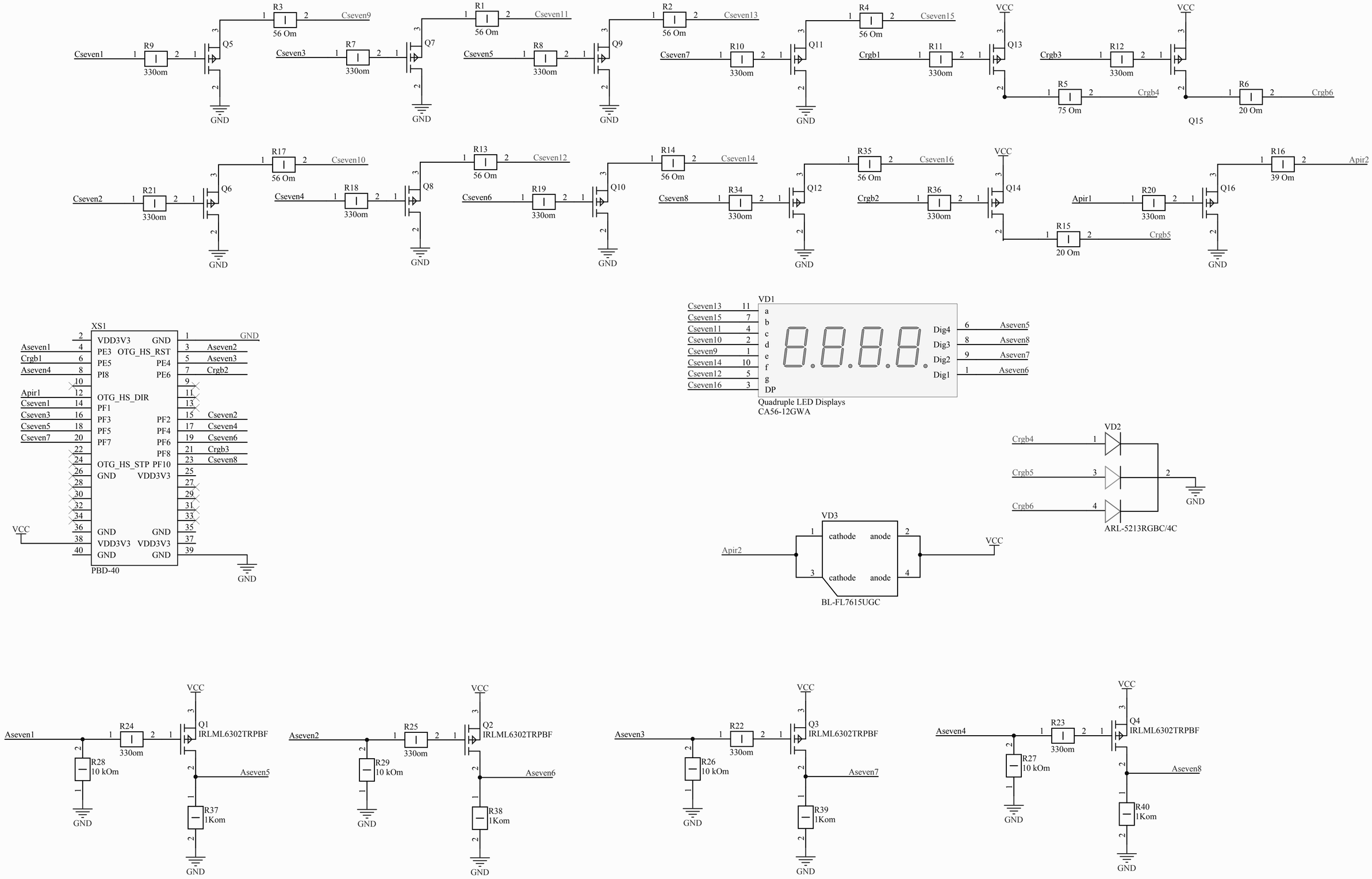

Title		
Size A3	Number	Revision
Date: 22.06.2014		Sheet of
File: E:\Байда для пайки\..\LM.SchDoc		Drawn By: