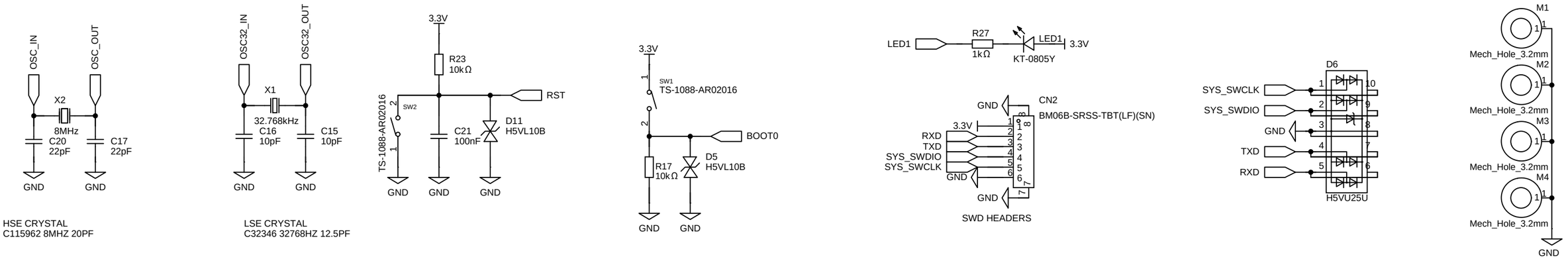

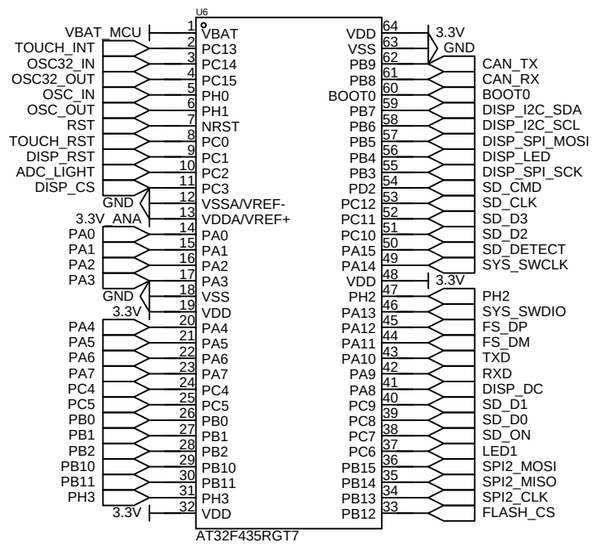

C3029577 AT32F435RGT7

CPU

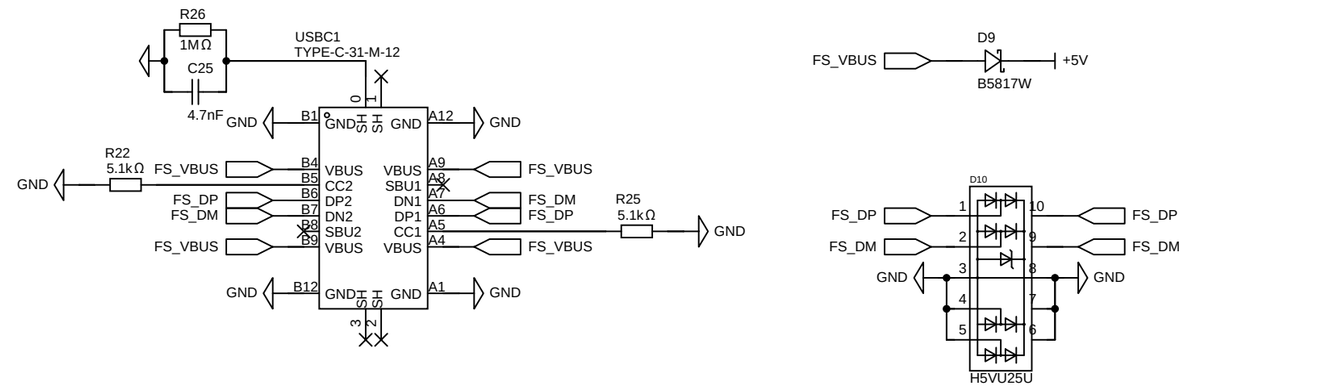

USB

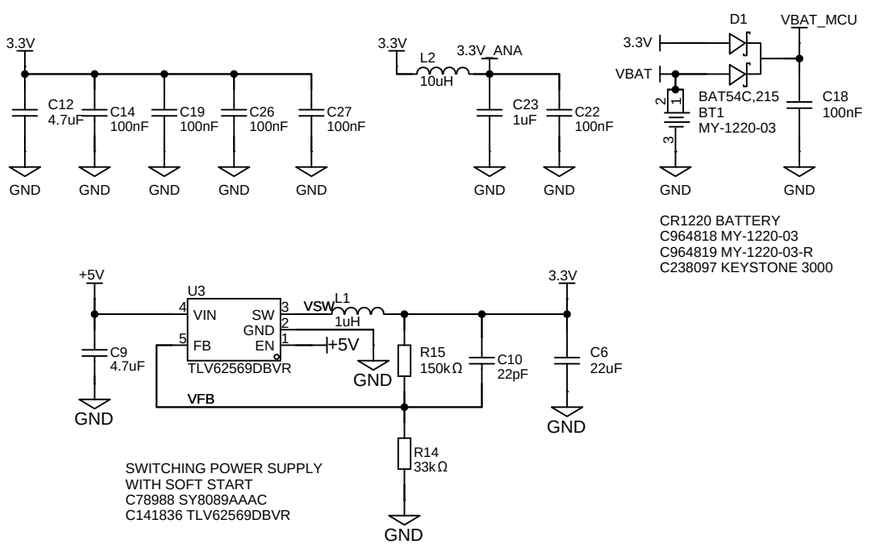

POWER

CHECKLIST:
LCD BACKLIGHT ON PWM
LED ON PWM
TOUCH PANEL INTERRUPT ON WAKEUP
USER KEY ON WAKEUP
SD CARD LENGTH, IMPEDANCE
USB LENGTH, IMPEDANCE
USB 10 MIL TRACE 8 MIL SPACE
50 OHM 13 MIL TRACE
TRANSMISSION LINES OVER GROUND PLANE

MANUFACTURING:
PCB CONTROLLED IMPEDANCE JLC04161H-7628
NO SOLDER PASTE ON MIDDLE PAD OF BATTERY HOLDER C964818
BOX SLA RESIN
BOX CLOSES WITH 4 M3x8MM SCREWS AND 4 M3 NUTS, NYLON OR ACRYLIC

COMPARISON
AT32F435:
HSE CRYSTAL
C115962 8MHZ 20PF
LSE CRYSTAL
C32346 FC135 32768HZ 12.5PF
PINOUT
PIN 30: GPIO PB11
PIN 31: GPIO PH3
PIN 47: GPIO PH2

STM32:
HSE CRYSTAL
C400090 8MHZ 10PF
LSE CRYSTAL
C97604 SC-32S 32768HZ 7PF
C213424 DST310S 32768HZ 7PF
PINOUT
PIN 30: 4.7UF OR GPIO PB11
PIN 31: GROUND
PIN 47: GROUND

Schematic	Schematic1	Update Date	2024-10-10
		Create Date	2024-10-10
Page	P1	Part Number	JLCPCB-002
Drawed		at32f435-board	
Reviewed	EasyEDA		
		VER	SIZE	PAGE 1 OF 2
EasyEDA		V0.1	A4	EasyEDA.com

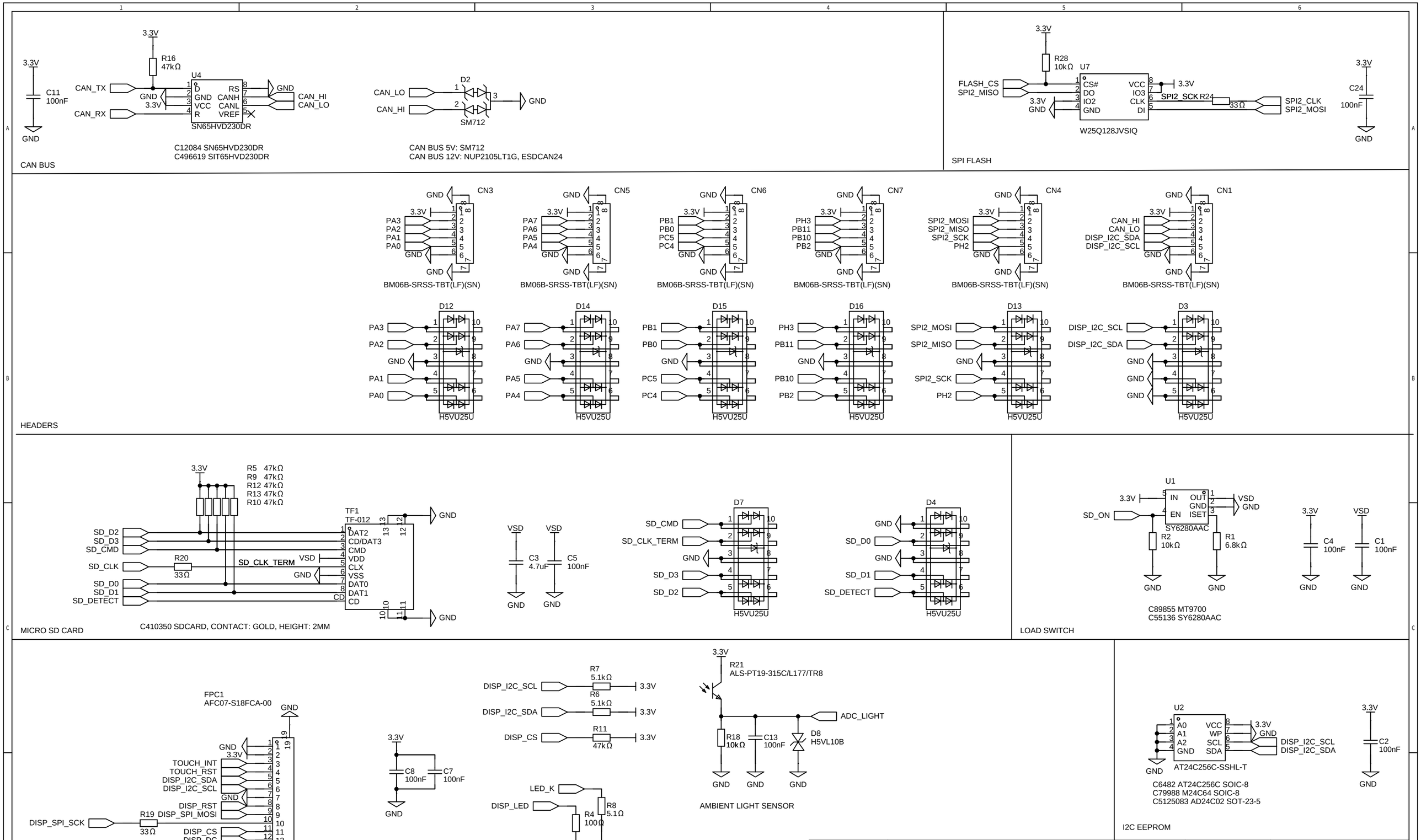

Schematic	Schematic1	Update Date	2024-10-26
		Create Date	2024-10-10
Page	P2	Part Number	JLCPCB-002
Drawed		at32f435-board	
Reviewed	EasyEDA		
		VER	SIZE	PAGE 2 OF 2
EasyEDA		V0.1	A4	EasyEDA.com